MEETING AGENDA

The City of Beaufort

HISTORIC DISTRICT REVIEW BOARD

Wednesday, August 10, 2022, 2:00 P.M.

City Hall, Council Chambers, 2nd Floor – 1911 Boundary Street, Beaufort, SC

Please click the link below to access the webinar:
https://us02web.zoom.us/j/82575842782?pwd=bFZ5WFE4OUk5aGtnVkxEYkhaRmpMdz09
Password: 460603 Meeting ID: 825 7584 2782 Call in Phone #: 1+929 205 6099

STATEMENT OF MEDIA NOTIFICATION: "In accordance with South Carolina Code of Laws, 1976, Section 30-4-80(d), as amended, all local media were duly notified of the time, date, place, and agenda of this meeting."

Note: A project will not be reviewed if the applicant or representative is not present at the meeting.

I. Call to Order:

II. Review of Minutes:

A. July 13, 2022 Meeting Minutes

III. Public Hearing:

A. 1003 Congress Street, PIN R120 004 000 0080 0000 – Demolition

IV. Applications:

A. 1003 Congress Street, PIN R120 004 000 0080 0000, Demolition
Applicant: Robert C. Jenkins, Homeowner (22-47 HRB.1)

The applicant is requesting final approval of demolition of a single-family residence.

A. 504 Prince Street, PIN R120 004 000 0642 0000, Alterations
Applicant: Michael and Cindy Kennedy, Homeowner (22-50 HRB.1)

The applicant is requesting final approval for alterations to a single-family residence at 504 Prince Street.

B. 607 King Street, PIN R120 004 000 1031 0000, New Construction
Applicant: Bill Allison, Allison Ramsey Architects (22-14 HRB.2)

C. **407/409 Laurens Street, PIN R120 004 000 0567 0000,** Alterations
Applicant: Bradford Fleming, Homeowner (22-51 HRB.1)

The applicant is requesting final approval for alterations to a single-family residence at 407 and 409 Laurens Street.

D. **606 Carteret Street, PIN R120 004 000 0628 0000,** Alterations
Applicant: Eric Berman, Berman Property Group, LLC

The applicant is requesting final approval for alterations to an existing structure at 606 Carteret Street.

E. **401 King Street, PIN R120 004 000 0650 0000,** Alterations/Additions
Applicant: Allison Efird, Titan Solar Power

The applicant is requesting conceptual approval for addition of solar panel system to a single-family residence at 401 King Street.

V. Discussion

A. **Demolition Letter with Sunset Provision**

VI. Adjournment

DRAFT

Historic District Review Board
Meeting Minutes – July 13, 2022

CALL TO ORDER 0:01:39

A meeting of the Historic District Review Board was held in-person on Wednesday, July 13, 2022 at 2:00 pm.

ATTENDEES

Members in attendance: Jeremiah Smith (Chairman), Mike Sutton (Vice-Chair), Rita Wilson, and Maxine Lutz. Michelle Prentice was absent from the meeting.

Staff in attendance: Jeremy Tate and Maria Short (Meadors Architecture)

REVIEW OF MINUTES 00:03:12

Motion: Mr. Sutton made a motion to approve the June 8 meeting minutes, with one item at the end that Ms. Applegate's name was misspelled; seconded by Ms. Wilson. The motion passed unanimously (4-0).

All Historic District Review Board Meeting minutes are recorded and can be found on the City's website at http://www.cityofbeaufort.org/AgendaCenter. Audio recordings are available upon request by contacting the City Clerk, Traci Guldner at 843-525-7024 or by email at tgundler@cityofbeaufort.org.

APPLICATIONS

Mr. Smith recused himself from the board, Mr. Sutton acts as chairman.

A. **1107 Bay Street, PIN R120 004 000 1038 0000,** Change After Certification 00:03:49
Applicant: Cooter Ramsey, Architect (22-45 HRB.1)

The applicant is requesting a Change After Certification for the triplex currently under construction at 1107 Bay Street.

Motion 1 (0:27:47): Mr. Sutton made a motion to support the applicant's request [for] approval after certification with the exceptions of items 4 and 5 [which] are the items that the applicant has stated they would do to make an effort to create a finish that's more appropriate to the original design that Board does not believe would have to come back to the Board and the Board would like to see staff do a field inspection and only bring it back to the Board if it fails staff level scrutiny. Motion to approve the first three staff conditions as are written and [for] number four and five the finishes to be modified; seconded by Ms. Wilson. The motion passed unanimously (3-0).

Mr. Smith rejoins the board, acting as chairman.

B. **1705 Duke Street, PIN R120 003 000 0788 0000,** New Construction **0:30:19**
Applicant: Wendell Varnes, Homeowner (22-29 HRB.1)

The applicant is requesting Final Approval for new construction of a single-family residence.

Motion (0:39:54): Mr. Sutton made a motion to support staff and the roof material choices for this application; seconded by Mr. Smith. Motion passed unanimously (4-0).

Motion (0:40:46): Mr. Smith made a motion to approve the application as submitted with staff comments for final; seconded by Mr. Sutton. Motion passed unanimously (4-0).

C. **500 Port Republic Street, PIN R120 004 000 0963 0000,** Dock Extension **0:41:18**
Applicant: Denis Wiener, Homeowner (22-38 HRB.1)

The Applicant is requesting a dock extension at 500 Port Republic Street.

Motion (0:48:09): Ms. Lutz made a motion to accept this [the application] for final approval as submitted; seconded by Ms. Wilson. Motion passed unanimously (3-1), with opposition from Mr. Sutton.

D. **607 Harrington Street, PIN R120 004 000 600B 0000,** Alterations **0:48:46**

Applicant: Steve Tully, Homeowner (22-44 HRB.1)

The applicant is requesting Final Approval of alterations/additions to an existing structure at 607 Harrington Street.

Motion (0:53:13): Mr. Sutton made a motion to support [the application] as submitted; seconded by Ms. Lutz. Motion passed unanimously (4-0).

E. **905 Harrington Street, PIN R120 004 000 0265 0000,** Alterations **0:53:38**
Applicant: Tim Boring, Homeowner (22-48 HRB.1)

The applicant is requesting final approval to remove the enclosure around the front porch, paint the exterior, and replace front door and windows.

Motion 1 (1:10:10): Mr. Sutton made a motion to approve at conceptual based on staff's comments and applicant's request, seconded by Mr. Smith. Motion passed unanimously (4-0).

Motion (1:12:00): Mr. Sutton made a motion to move agenda item F [600 Charles Street] to the end and bring in agenda item G [803 Prince Street]; seconded by Ms. Wilson. Motion passed unanimously (4-0).

F. **803 Prince Street, PIN R120 004 000 536B 0000,** New Construction **1:12:25**
Applicant: Bill Chambers, Architect (22-39 HRB.1)

The applicant is requesting conceptual approval for new construction of a single-family residence at 803 Prince Street.

Motion 1 (2:07:05): Mr. Sutton made a motion to approve the scale as presented for the structure; seconded by Mr. Smith. Motion passed unanimously (4-0).

Motion 2 (2:14:03): Mr. Sutton made a motion that the applicant stake the property for a future site visit by Board members prior to next submittal, seconded by Ms. Lutz. Motion passed (4-0).

Motion 3 (2:17:37): Mr. Sutton made a motion to approve conceptual with staff conditions noted; seconded by Mr. Smith. Motion passed (3-1), with Ms. Lutz in opposition.

G. **600 Charles Street, PIN R120 004 000 0608 0000,** New Construction **2:18:10**
Applicant: Steve Andrews, Engineer (22-33 HRB.1)

The applicant is requesting final approval to maintain/repair the steeple at the Baptist Church of Beaufort and has provided two options.

After the staff presentation and discussions with staff and the Board, the applicant withdrew his application based on the new scope of the project which would be a staff review.

DISCUSSION 2:23:05

The Board and staff discussed the dates for the next work session to discuss the Milner Preservation Manual update as tentatively between July 25-27 or August 1-2. Staff and the Board welcomed Ms. Wilson as the newest board member.

ADJOURNMENT 2:31:30

Motion: Mr. Smith made a motion for adjournment at 4:33 pm, Ms. Lutz seconded. The motion passed unanimously.

CITY STAFF INTRODUCTION

1003 Congress Street

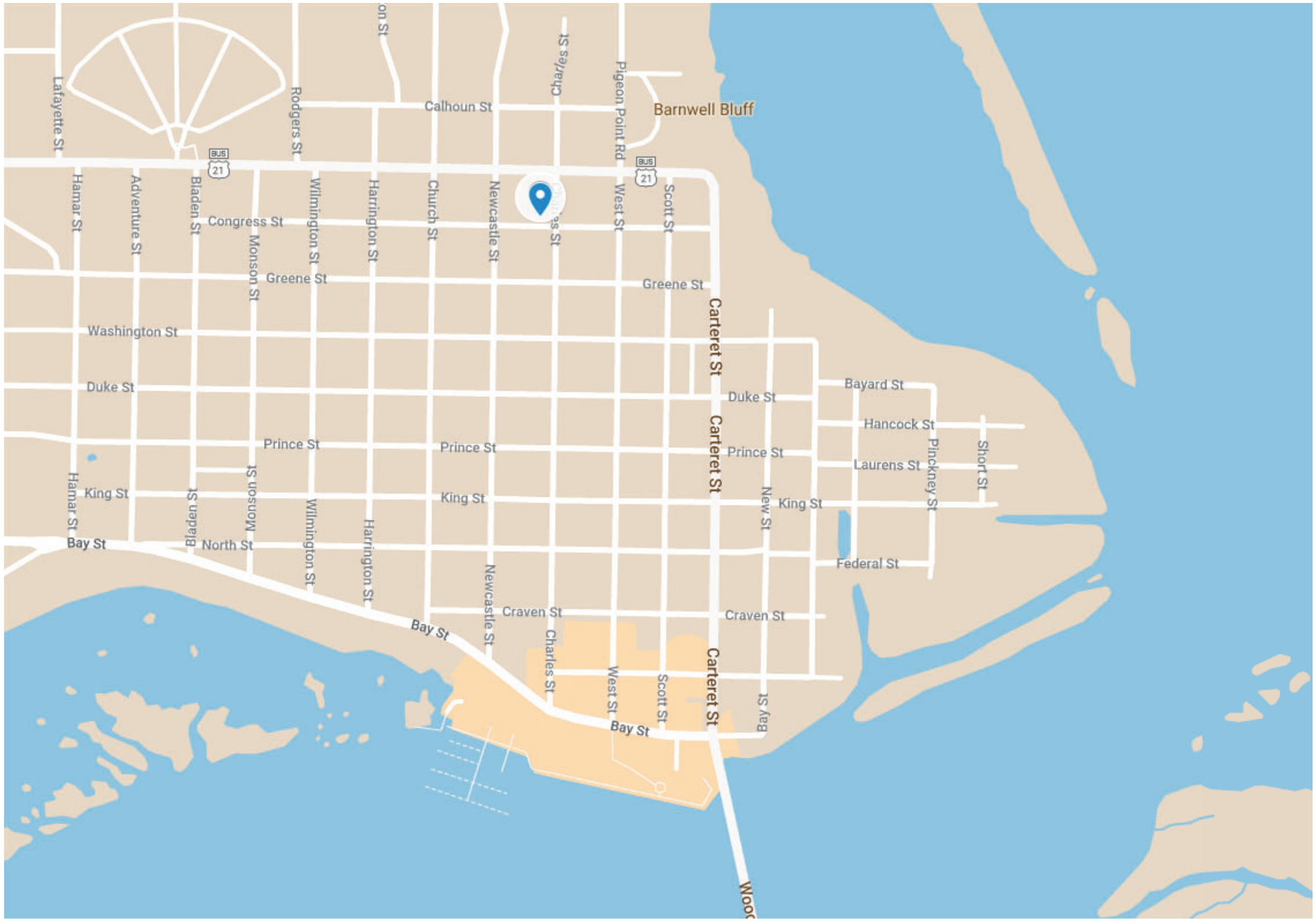
Lafayette St
Rodgers St
Calhoun St
Charles St
Pigeon Point Rd
Barnwell Bluff
Hamar St
Adventure St
Bladen St
Congress St
Monson St
Wilmington St
Harrington St
Church St
Newcastle St
West St
Scott St
Greene St
Greene St
Washington St
Carteret St
Duke St
Duke St
Bayard St
Hancock St
Prince St
Prince St
Prince St
Laurens St
Pinckney St
Short St
Hamar St
King St
Bladen St
Monson St
King St
New St
King St
Bay St
North St
Wilmington St
Harrington St
Federal St
Newcastle St
Craven St
Craven St
Bay St
Charles St
West St
Scott St
Carteret St
Bay St
Bay St



1003 Congress 3 of 24



1003 Congress 4 of 24



1003 Congress 5 of 24



1003 Congress 6 of 24

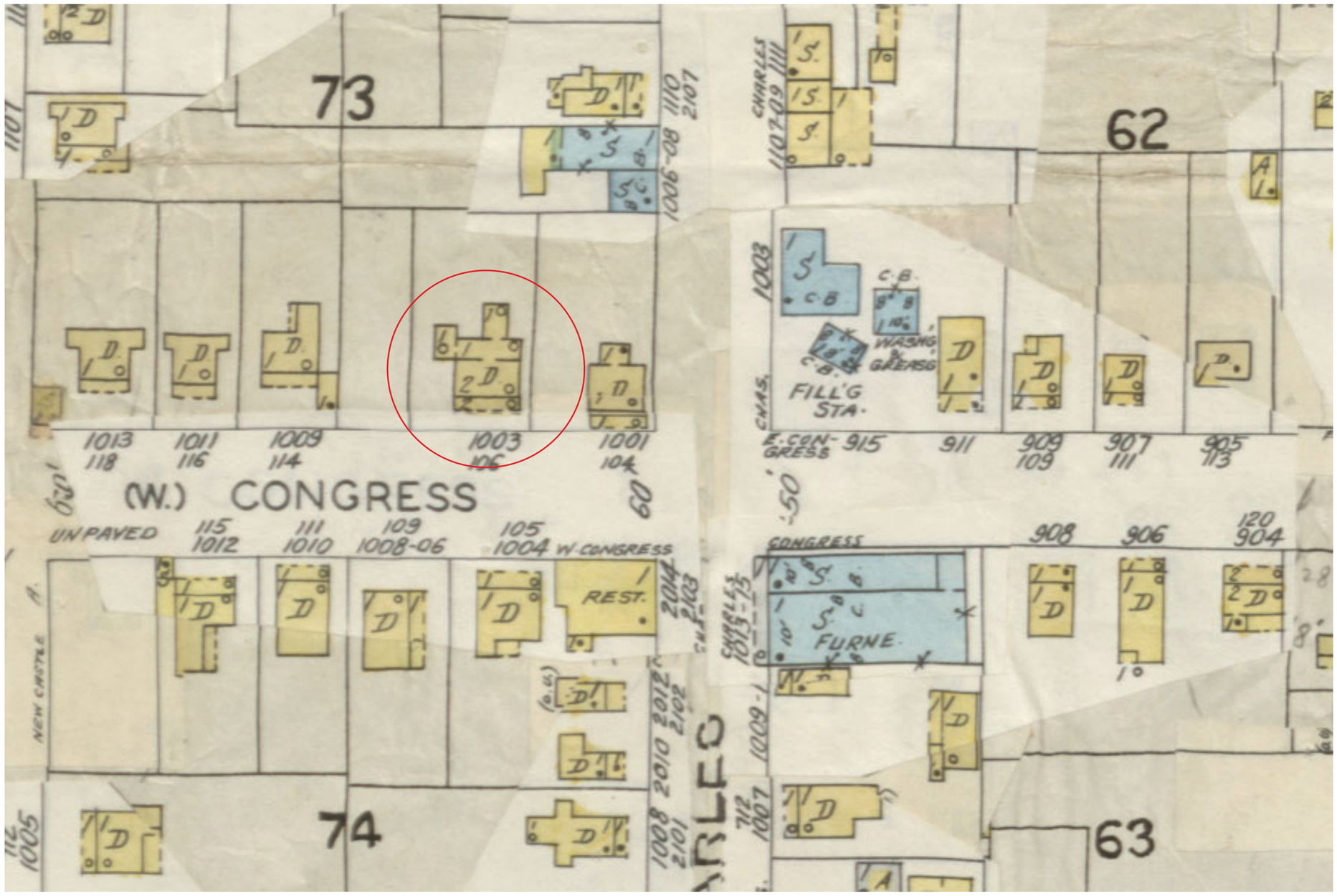

1952 Sanborn Map - 1003 Congress Street

1003 Congress 7 of 24

APPLICANT PRESENTATION

1003 Congress Street

DEVELOPMENT REVIEW PROCESS

HISTORIC REVIEW APPLICATION

Community & Economic Development Department
1911 Boundary Street, Beaufort, South Carolina, 29902
p. (843) 525-7011 / f. (843) 986-5606
www.cityofbeaufort.org

$ PAID 2/22 + 6/30/22

☐ Staff Review
☒ Board Review

Application Fee:
see attached schedule

OFFICE USE ONLY: **Date Filed:** 6/29 **Application #:** 23084 **Zoning District:** T4-N
BCAGHS Survey: ☐ Yes ☒ No

Schedule: The Historic Review Board (HRB) typically meets the 2nd Wednesday of each month at 2pm. The complete schedule, along with the list of deadlines, may be found here - http://www.cityofbeaufort.org/historic-review-board.aspx

Submittal Requirements: All forms and information shall be submitted digitally. In addition to a complete application form, applicants shall submit the required items according to the checklists on the subsequent page.

Review Request: ☐ Conceptual ☐ Preliminary ■ Final ☐ Bailey Bill Approval* ☐ Change After Certification
**Requires a Bailey Bill – Part A Preliminary Review Application Form*

Pursuant to Section 6-29-1145 of the South Carolina Code of Laws, is this tract or parcel restricted by any recorded covenant that is contrary to, conflicts with, or prohibits the activity described in this application? ☐ Yes ☒ No

Applicant, Property, and Project Information

Applicant Name: Robert C. Jenkins

Applicant Address: 1004 Congress Street Bft. SC 29902-4622

Applicant E-mail: N/A Applicant Phone Number:

Applicant Title: ■ Homeowner ☐ Tenant ☐ Architect ☐ Engineer ☐ Developer

Owner (if other than the Applicant):

Owner Address:

Project Name: Demolition of non contributing structure at 1003 Congress Street

Property Address: 1003 Congress Street

Property Identification Number *(Tax Map & Parcel Number)*: R120 004 000 0080

Date Submitted:

Certification of Correctness: I/we certify that the information in this application is correct.

Applicant's Signature: Robert C. Jenkins Date: 6/23/22

Owner's Signature: Robert C. Jenkins Date: 6/23/22

(The owner's signature is required if the applicant is not the owner.)

DEVELOPMENT REVIEW PROCESS

HISTORIC REVIEW BOARD APPLICATION

Community & Economic Development Department
1911 Boundary Street, Beaufort, South Carolina, 29902
p. (843) 525-7011 / f. (843) 986-5606
www.cityofbeaufort.org

Project Name: Demolition of 1003 Congress Street

Property Size in Acres: +/- .02 Proposed Building Use: redevelopment of

Nature of Work (check all that apply):

☐ New Construction, Primary Structure ☐ New Construction, Primary Structure ☐ Alterations / Additions

■ Demolition* ☐ Relocation* *Demolition and Relocation requires a public hearing

Building Square Footage (if multiple buildings, please list each one and their square footage by floor):

Is this project a redevelopment project: ☑ Y ☐ N

Are there existing buildings on the site? ☑ Y ☐ N If yes, will they remain? ☐ Y ☑ N

Provide a brief Project Narrative (if requesting Bailey Bill Approval, this section may be left blank):

The building was our family homestead, has been vacant for about 16 years with n

Please See Attach.

CONTACT INFORMATION –

Attention: Julie A. Bachety, Administrative Assistant II

City of Beaufort Department of Planning & Development Services

1911 Boundary Street, Beaufort, South Carolina 29902

E-Mail: jbachety@cityofbeaufort.org | Phone: (843) 525-7011 | Fax: (843) 986-5606

BEAUFORT COUNTY
HISTORIC SITES SURVEY - 1997

RECONNAISSANCE LEVEL BUILDING INVENTORY FORM

Statewide Survey Site Form
State Historic Preservation Office
South Carolina Department of Archives and History
Columbia, SC

Site Number: U- (Access) 13 - (County) 1043 (Site #)
USGS Quad: 025 Beaufort
Doc. Level: Reconnaissance Level

Historic name(s):
Common name(s):
Map Ref.: BFT 09 (TL)
City Block Ref.: 73
Tax Number: R120 004 000 0080 0000
Island: Port Royal Is.
Address/location: **1003 Congress St.**
City/Vicinity of (vic.) Beaufort
Date: 1910
Alteration date: ca. 1980
Ownership: ☒ 1. private ☐ 2. city ☐ 3. county ☐ 4. state ☐ 5. federal ☐ 6. unknown
Category: ☒ 1. building ☐ 2. site ☐ 3. structure ☐ 4. object
Historic use(s): single dwelling
Current uses: single dwelling
Notes: Northwest Quadrant neighborhood

National Register Status:	Date:	Listing Name:	NRIS #
National Register Historic District (NHL, 11/73)	12/17/69	Beaufort Historic District	69000159

SHPO National Register Evaluation: Does not contribute to listed district — Name: Beaufort Historic District

Consultant Recommendation: — Name:

Previous Survey:

		Reference:	Notes:
☐ H.A.B.S.	☐ Other		
☒ Feiss-Wright (1969)		073 - 081	
☐ Historic Resources of the Lowcountry (1979)			
☐ Milner Historic District Inventory (1979)			
☐ A Guide to Historic Beaufort (1995 ed.)			

Photograph:

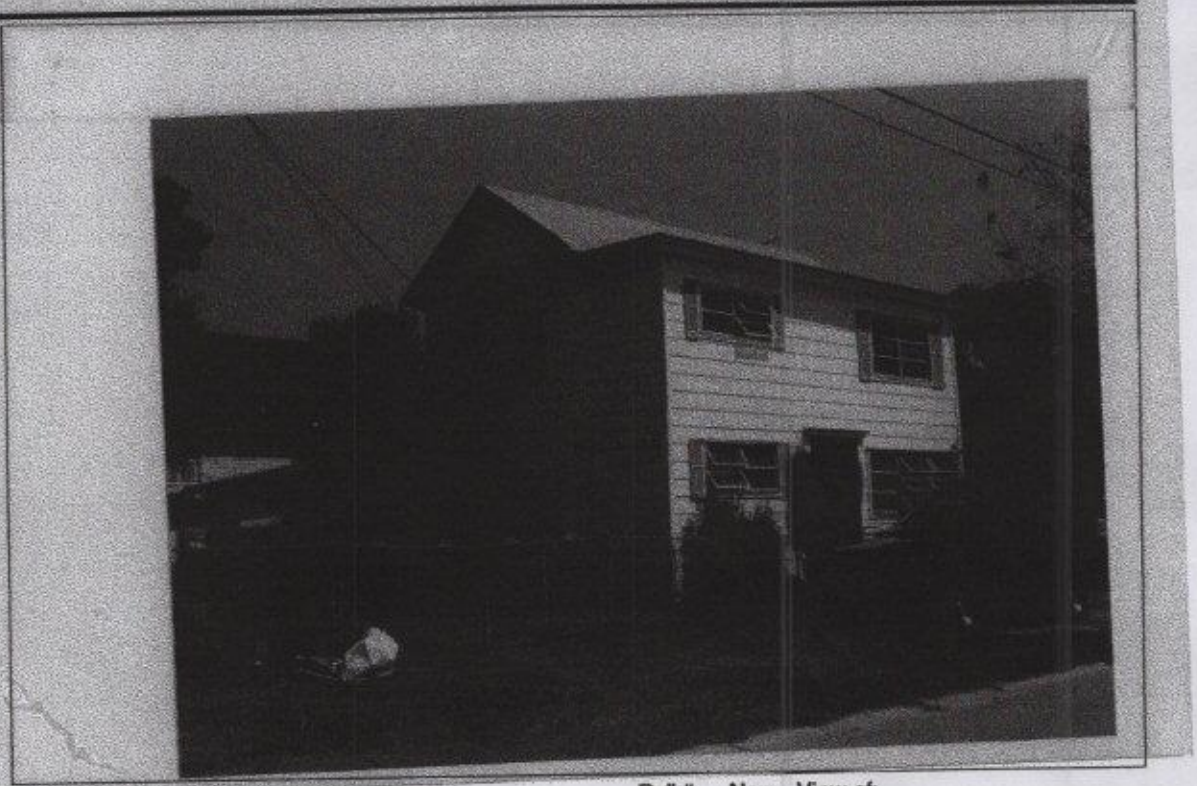

Photographs:
☒ prints
☐ slides
☒ negatives

Date: 7/1/97
Recorder: D. Schneider, Historic Beaufort Fdn.

Roll #	Neg.	View of:
S-08	15	S facade & W elev., fac. NE

Robert C. Jenkins, Retired
1004 Congress St.
Beaufort, SC 29902
843-524-5299

Date: June 23, 2022

To: Historic Review Board

Re: Demolition of 1003 Congress St. Beaufort, SC 29902

I'm writing to provide a Project Narrative for the demolition of my property located at 1003 Congress St. within the City limits of Beaufort.

The structure located at 1003 Congress St. was formerly my family homestead with multiple additions added as my family grew. The property has been vacant for the past 10 years and there are no heirs capable of restoring the property "as is", or taking it back to its historical core, which may represent approximately 25% of the existing structure.

The property is not listed in the City's schedule of historically contributing structures and is not salvageable under my ownership.

I have a prospect prepared to purchase the house and adjacent lots and to establish and infill residential development as outlined in the City's Civic Master Plan, and the Beaufort Code with smaller, more affordable homes.

Additional factors to consider are listed below:

a. There is permanent termite damage within the structure

b. Attempts have been made to "tent" the house with termite treatments to no avail

c. The ceilings have fallen in three rooms of the house

d. Floors are weakened, rotted and uneven throughout the house

e. The entire east side of the structure has sunken approximately 20°

If I can answer any questions, or provide additional information, please don't hesitate to contact me.

Robert C. Jenkins

Request for Demolition
1003 Congress Street
Beaufort,, SC 29902

R120-004-000-0080-0000 (a portion of lot 80)

Exhibits

A. Tax Map Depiction - Structures to be removed
B. Open space in remaining portion of lot 80 (east of house to be demolished)
C. Congress Street (front elevation)
D. East elevation
E. Rear elevation
F. West elevation
G. Adjacent lot on east (shed and other to be removed
H. Remaining Adjacent lots to from House and Shed to Newcastle Street

A.

Public Mapping Site Aerial Photography Archive City of Beaufort Zoning

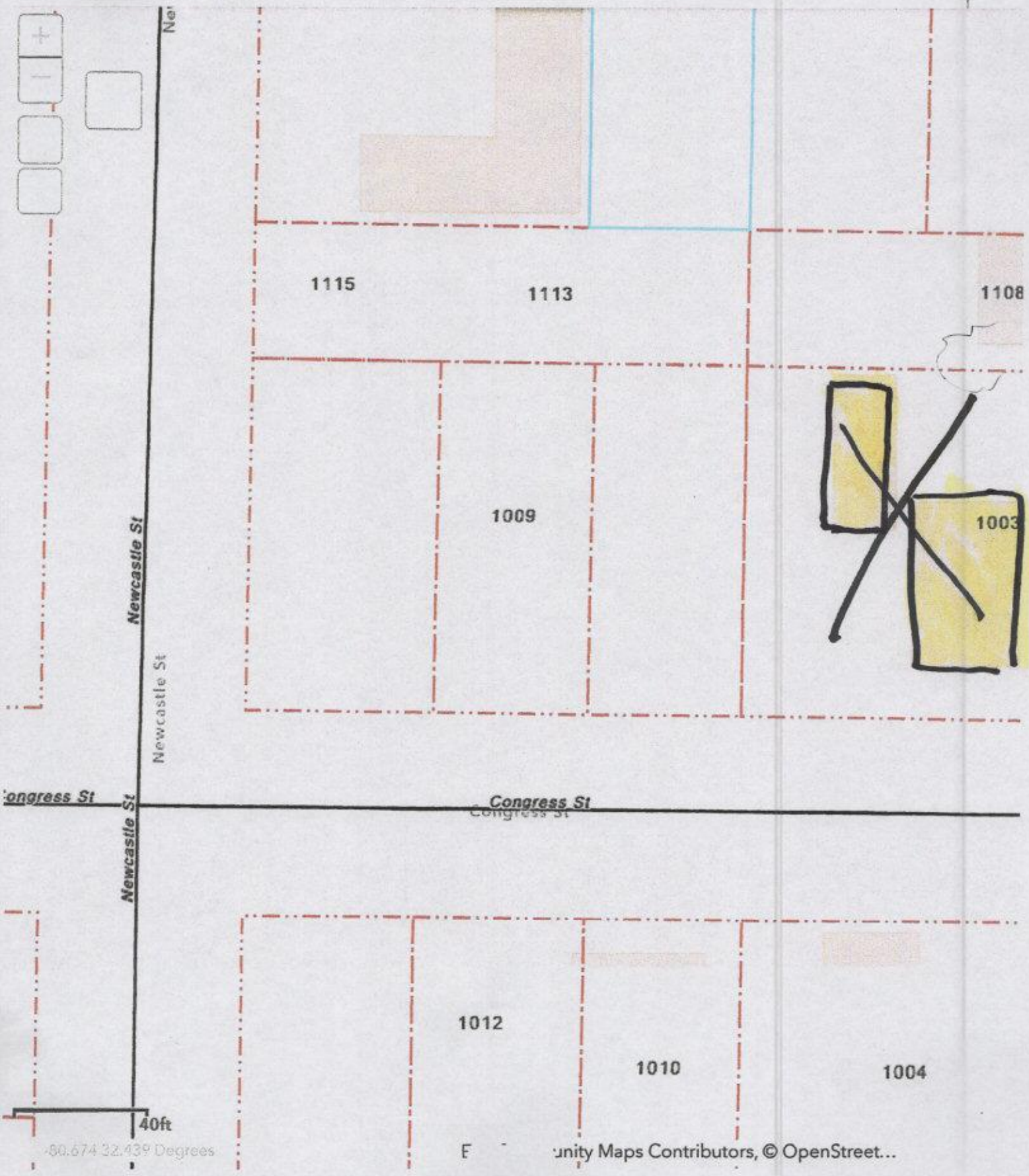

1003 Congress 14 of 24


B
1003 Congress 15 of 24



1003 Congress 16 of 24

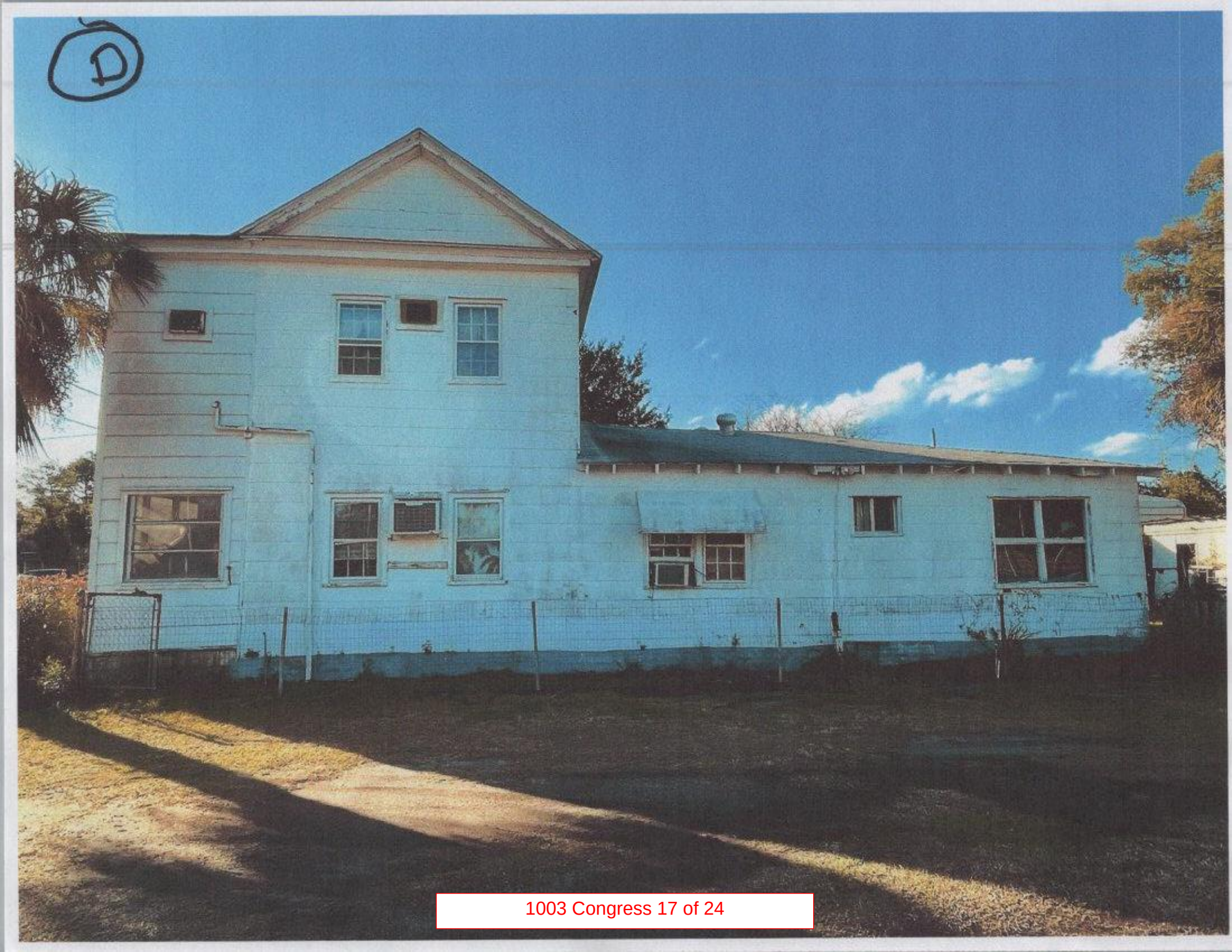
D
1003 Congress 17 of 24

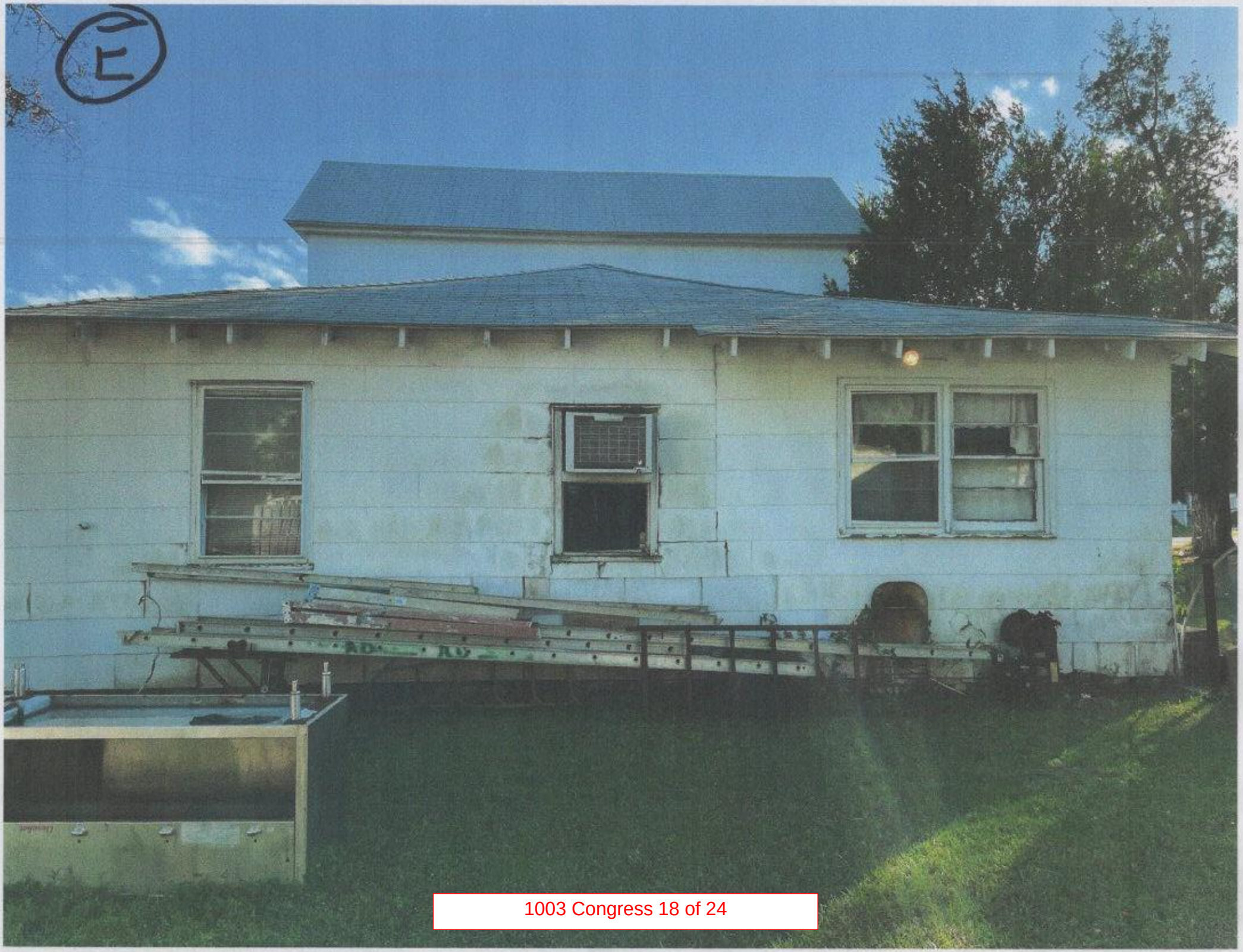
1003 Congress 18 of 24

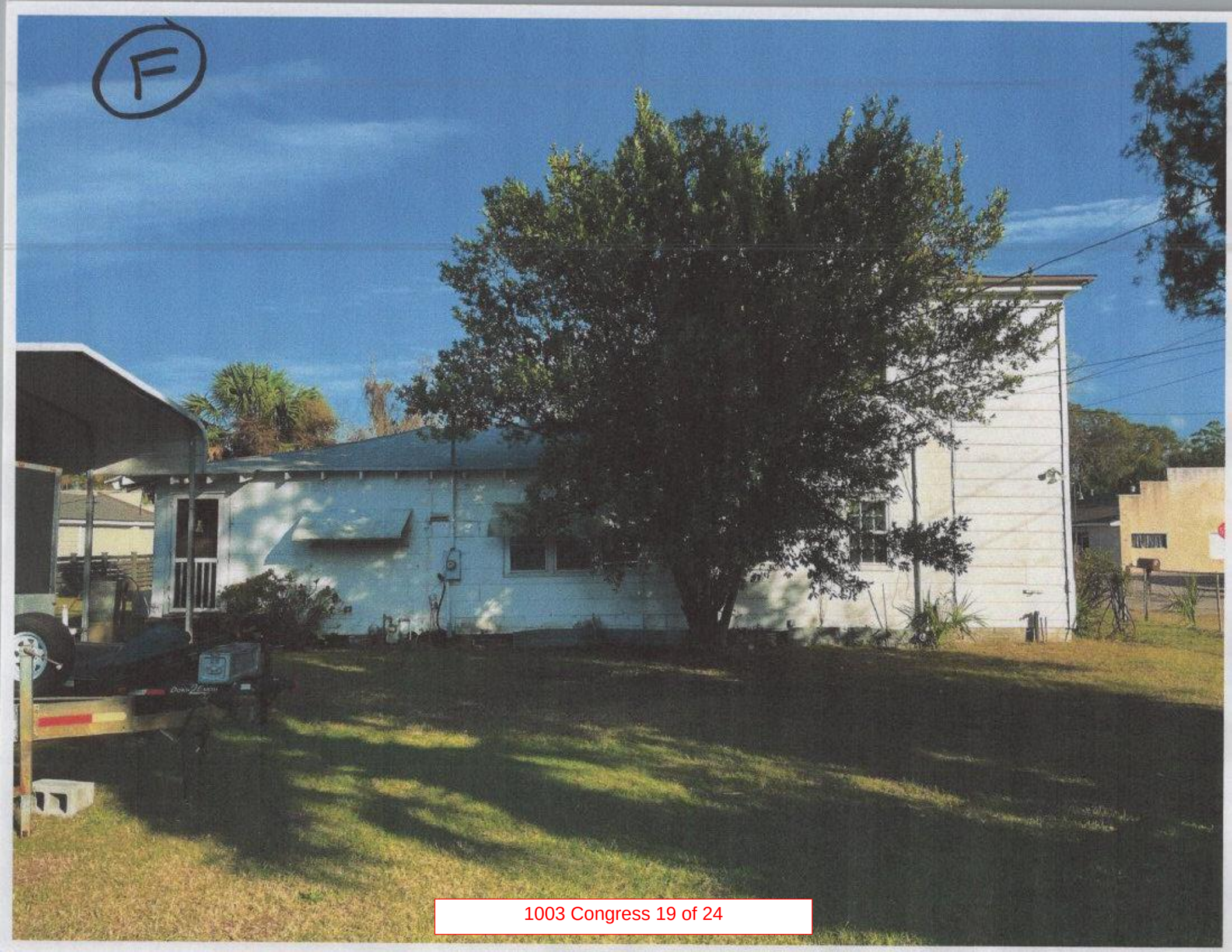
F
1003 Congress 19 of 24



1003 Congress 20 of 24


H
1003 Congress 21 of 24

Historic Review Board Meeting Staff Report

From the Department of Community and Economic Development
10 August 2022

1 Summary of Request

1003 Congress Street, Demolition
The applicant is requesting final approval for demolition of a single-family residence.

This application involves demolition of a Noncontributing Structure in the Northwest Quadrant and the Beaufort Conservation Neighborhood.

Background: No previous submissions have been received for this project.

2 Facts

Property Address:	1003 Congress Street
Parcel ID:	R120 004 000 0080 000
Case Number:	22-47 HRB.1
Applicant:	**Robert C. Jenkins, Homeowner**
Zoning:	T4-N
Use:	Single Family Dwelling



District Development Standards for T4-N:

- **Setback requirements – Primary Structure:**
  - *Front-0' min.- 15' max.*
  - *Rear setback – 10' min.*
  - *Side Corner/Alley – 0'min. – 10' max.*
  - *Side Interior – 5' min, or 0' if attached.*
- **Maximum Building Height: 4 stories max;** 3.5 stories max in & fronting Historic District & interior lots along Allison Rd.
- **Frontage Build-Out:** 60% min; 85% max.
- **Impervious Surface Coverage:** 70% maximum for rooftops, additional 10% allowed.

References:

Beaufort Preservation Manual Supplement
Beaufort Preservation Manual Supplement
Beaufort Preservation Manual

3 STAFF COMMENTS

Staff Acknowledgements

A. This structure is listed on the National Register of Historic Places List of Noncontributing Resources, and is defined as a "two-story frame dwelling, altered" circa 1910. Its historic sites survey lists its construction date as 1910, with alterations constructed ca. 1980. However, these rear additions appear as early as the 1924 Sanborn Map.

B. The 1952 Sanborn Map indicates that the structure was a two-story frame building with a two-story south-facing porch. The extent of the former porch and main structure is visible on the east and west facades by the jog in the siding. The main house appears to follow a traditional Beaufort-style residence with a south-facing porch, side-gabled roof, and one-room depth. The windows on this section of the house appear to be more historic six over six windows compared to the front façade's extruded aluminum windows. The foundation has been covered with a continuous cladding material and openings have been cut in the original main house to allow air conditioning units.

Staff Conditions

1. Staff does not support demolition of the main footprint (original portion) of the house as it retains its historic form and fenestration layout. Upon staff visit, the interior of the main footprint retains it original layout and roof framing is original. Staff notes that the interior finishes are mostly non-historic through years of modification.
2. Staff also notes that the original porch roofline, fascia, and soffit appear to be original and that that the porch was enclosed and is now the current front addition with aluminum windows. Staff supports keeping the porch roof features intact to preserve the dimensions of the original porch.
3. Saving historic forms, even in modest dwellings, is important to preserving the character and rhythm of historic neighborhoods and streetscapes. Staff supports retaining the main one-room, side-gabled portion of the structure and restoring the front addition to its original porch layout, and a rehabilitation plan by this applicant or a future applicant. Those rehabilitation plans would need to be submitted for a future review. Staff understands the owner's factors including the uneven sinking/settling, extensive termite damage, and fallen ceilings which will need to be mitigated. Staff supports future development on the property and surrounding parcels in keeping with the City of Beaufort's Civic Master Plan and the Beaufort Code.
4. Staff supports demolition/removal of the following elements:
    a. Rear addition(s)
    b. Asbestos Siding
    c. Continuous foundation cladding
5. If the Board approves demolition, Staff recommends that the applicant be required to document the building with photographs and measured drawings of the main structure and salvage materials as much as possible.

STAFF RECOMMENDATION:

Denial of Demolition of the main footprint (original portion) of the house and original front porch structure due to conditions noted. **Approval** of demolition of the rear addition(s), asbestos siding, front addition cladding and fenestration, and continuous foundation cladding with conditions noted.

CITY STAFF INTRODUCTION

504 Prince Street

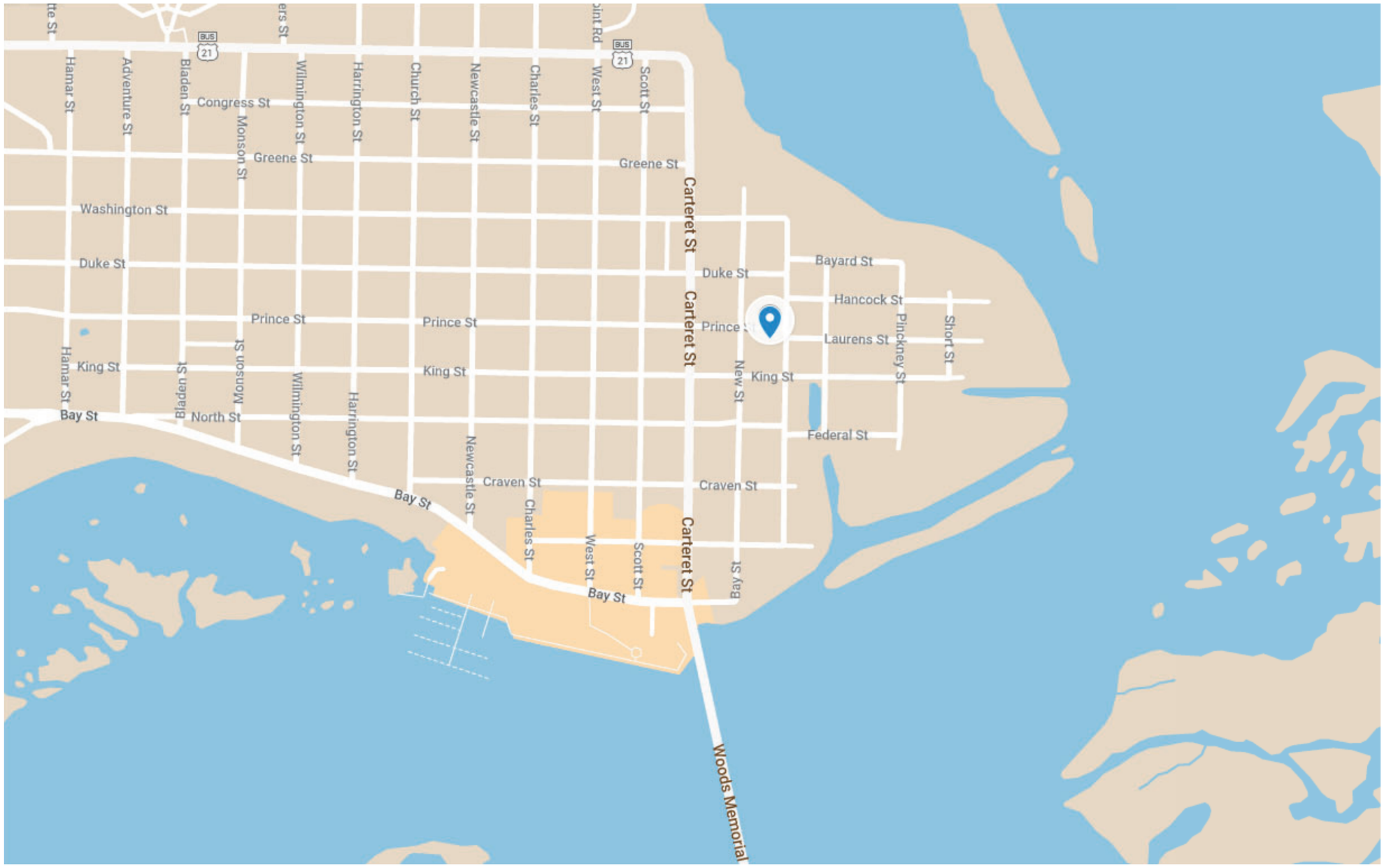
Hamar St
Adventure St
Bladen St
Congress St
Monson St
Wilmington St
Harrington St
Church St
Newcastle St
Charles St
West St
Scott St
Carteret St
Greene St
Washington St
Duke St
Prince St
King St
Bay St
North St
Craven St
Federal St
Bayard St
Hancock St
Laurens St
Pinckney St
Short St
New St
Woods Memorial


FORD




Prince St


Prince St



APPLICANT PRESENTATION

504 Prince Street

DEVELOPMENT REVIEW PROCESS 22-
HISTORIC REVIEW APPLICATION

Community & Economic Development Department
1911 Boundary Street, Beaufort, South Carolina, 29902
p. (843) 525-7011 / f. (843) 986-5606
Email: development@cityofbeaufort.org /www.cityofbeaufort.org

☐ Staff Review
☐ Board Review

Application Fee:
see attached schedule

OFFICE USE ONLY: **Date Filed:** 7/6 **Application #:** 24006 **Zoning District:** T4-N
BCAGHS Survey: ☐ Yes ☐ No

Schedule: The Historic Review Board (HRB) typically meets the 2nd Wednesday of each month at 2pm. The complete schedule, along with the list of deadlines, may be found here - http://www.cityofbeaufort.org/historic-review-board.aspx

Submittal Requirements: All forms and information shall be submitted digitally + 5 hardcopies of all documents. In addition to a complete application form, applicants shall submit the required items according to the checklists on the subsequent page.

Review Request: ☐ Conceptual ☐ Preliminary ☒ Final ☐ Bailey Bill Approval* ☐ Change After Certification
**Requires a Bailey Bill – Part A Preliminary Review Application Form*

Pursuant to Section 6-29-1145 of the South Carolina Code of Laws, is this tract or parcel restricted by any recorded covenant that is contrary to, conflicts with, or prohibits the activity described in this application? ☐ Yes ☑ No

Applicant, Property, and Project Information

Applicant Name: Michael and Cindy Kennedy

Applicant Address: 502 Prince Street, Beaufort SC 29902

Applicant E-mail: beaufortmichael@icloud.com Applicant Phone Number: 707 287 0926

Applicant Title: ☒ Homeowner ☐ Tenant ☐ Architect ☐ Engineer ☐ Developer

Owner (if other than the Applicant):

Owner Address:

Project Name: Kennedy Residence

Property Address: 504 Prince Street

Property Identification Number *(Tax Map & Parcel Number)*: R120 004 000 0642

Date Submitted: June 31, 2022

Certification of Correctness: I/we certify that the information in this application is correct.

Applicant's Signature: Michael Kennedy Cindy Kennedy Date: 6/31/2022

Owner's Signature: Michael Kennedy Cindy Kennedy Date: 6/31/2022

(The owner's signature is required if the applicant is not the owner.)

DEVELOPMENT REVIEW PROCESS

HISTORIC REVIEW APPLICATION

Community & Economic Development Department
1911 Boundary Street, Beaufort, South Carolina, 29902
p. (843) 525-7011 / f. (843) 986-5606
Email: development@cityofbeaufort.org / www.cityofbeaufort.org

Project Name: Kennedy Residence

Property Size in Acres: .09 Proposed Building Use: Residential

Nature of Work (check all that apply):

☐ New Construction, Primary Structure ☐ New Construction, Primary Structure ☒ Alterations / Additions

☐ Demolition* ☐ Relocation* **Demolition and Relocation requires a public hearing*

Building Square Footage (if multiple buildings, please list each one and their square footage by floor):

Is this project a redevelopment project: Y (N)

Are there existing buildings on the site? (Y) N if yes, will they remain? (Y) N

Provide a brief Project Narrative (if requesting Bailey Bill Approval, this section may be left blank):

This building was inundated with flood water from Hurrican Irma. A rear addition(10') wa completely rotten, and removed. The building was raised to elevation 14.00 AMSL. Also, added is a screen porch to the eastern elevation. A new 12 x 20 garage structure was added as well. Included in the design proposal is a modest 8 x 20 in-ground pool, screened by surrounding structures.

CONTACT INFORMATION –

Attention: Julie A. Bachety, Administrative Assistant II
Community & Economic Development Department
1911 Boundary Street, Beaufort, South Carolina 29902
E-Mail: development@cityofbeaufort.org Phone: (843) 525-7011 | Fax: (843) 986-5606

Revised June 10, 2021

HISTORIC DISTRICT REVIEW
CERTIFICATE OF APPROPRIATENESS

Application Requirements

The Beaufort Code applies to all projects; the Historic District Infill Design Guidelines in Section 4.7 apply to new construction in the Historic District.

The Historic Review Board also utilizes the following documents when evaluating projects:

- *The Beaufort Preservation Manual* & *Supplement:* these standards apply to New Construction, Alterations and Additions to Contributing Structures, and Demolition located everywhere in the Historic District except the Northwest Quadrant.
- *The Northwest Quadrant Design Guidelines:* these standards apply to New Construction, Alterations and Additions to Contributing Structures, and Demolition located in the Northwest Quadrant of the Historic District
- The Secretary of the Interior's *Standards for Rehabilitation:* these standards apply to all modifications to Contributing Structures throughout the Historic District

All documents can be found online at www.cityofbeaufort.org

- The Beaufort Code can be found here: http://www.cityofbeaufort.org/434/Zoning
- Documents specific to the Historic District, a map of the Historic District and neighborhoods, and the list of Contributing and Non-Contributing Structures can be found here: http://www.cityofbeaufort.org/350/1997-Beaufort-County-Historic-Sites-Surv

NOTE 1: If a New Construction project also requires major demolition a separate application is required. (Refer to the Checklist for Demolition on page 3).

NOTE 2: Applications will not be considered complete until all the required items have been submitted. Incomplete applications will not be placed on the agenda.

NOTE 3: Applications are to be compiled in the order in which the applicant plans to present the application to the Board during the meeting.

Submission Requirements for New Construction and Alterations or Additions

Please submit DIGITAL FILES ONLY via email to: development@cityofbeaufort.org

*Initial submittals should show existing and proposed conditions. For all subsequent submittals, architectural drawings should show and clearly label existing conditions, the previous proposal, and the current proposed. Each version of the same drawing should be adjacent to the others in the application for easy review.

***This Application Requirements Checklist MUST be included in applications, with submitted items checked.**

Conceptual Review

- ☐ **Existing Context:** Color photographs of the existing structure and the adjacent structures.
- ☐ **Plat:** A plat indicating the tax map and parcel number, existing structure(s), setbacks, existing trees, and proposed construction footprint.
- ☐ **Site Plan:** A site plan, to scale, indicating the location of the existing structure on the lot, proposed new structure, any site modifications (parking, paths, landscaping, tree removal, etc…), any new or existing mechanical equipment and screening area, and percentage of the total impervious paving. The plan should also include any connections to the public right of way (street and/or sidewalk), and grade elevations of the street and/or sidewalk and the proposed construction at the first floor.
- ☐ **Design:** One or more drawings that convey the intent of the proposal. This may include: floor plans, elevations, and building sections. They should display massing and scale of new construction and how it relates to the existing structure or surrounding context. For new construction and additions, this drawing should include a street elevation and/or a street section showing height and width relationships to existing adjacent buildings.
- ☐ **3-D Rendering:** A 3-D rendering, or physical scale model, showing the height, mass and scale of the proposed building in its context is required for all structures except single-family and 2-3 unit residential buildings.
- ☐ **Pre-Application Conference:** A Pre-application conference is required for all commercial new construction and substantial commercial renovation projects. The requirement for an Archeological Impact Assessment will be determined at this meeting.

Preliminary Review: All the documents required for Conceptual Review, PLUS:

- ☐ **Floor Plans:** Proposed floor plans of all levels of the building, including square footage. For Alterations or Additions, existing conditions drawings of the floor plan are also required, showing the area and square footage affected by the addition.
- ☐ **Elevations:** Elevation drawings of all sides of the building, including heights – height above grade, floor-to-floor heights, eave height and ridge height (if applicable). For Alterations or Additions, existing conditions drawings of all four elevations are also required.
- ☐ **Color Rendering:** A colored version of at least one elevation, noting proposed materials and colors.
- ☐ Additional on-site representation, such as a height story pole, and corner staking of the foundation, may be required.
- ☐ A Certified Arborist report may be required if grand trees are affected by the project.

Final Review: All the documents required for Preliminary Review, PLUS:

- ☐ **Details:** A typical wall section(s), window details, door details, eave details, porch details, and any other details characteristic to the building are required.
- ☐ **Material Samples and Cut Sheets:** Applicant to submit cut sheets for all exterior building materials, to include roof and typical roof details, doors, windows, dryer vents, exterior lighting, etc. Samples of windows, lighting and building materials may be required at Staff's discretion.
- ☐ **Final Materials List:** A final list, including colors, is required.
- ☐ **Landscaping Plan:** A landscaping plan is required for commercial projects. It shall include a schedule detailing materials and colors of all plants and landscape materials, all existing trees, with the trees to be removed noted, existing and proposed grading, and any exterior lighting proposed.

Submission Requirements for Change After Certification

Please submit DIGITAL FILES ONLY via email to: development@cityofbeaufort.org

Change After Certification:

- ☐ **Copy of Certificate of Appropriateness** received with previous approval.
- ☐ **Previously Approved Drawings:** Applicant to submit **complete** set of previously approved documents. Current proposed documents to be interlaced between previously approved documents and must be formatted to match previously approved. For example, previously approved elevations should be followed by current proposed. Drawings to be clearly noted as "Previously Approved" or "Current Proposed", and all proposed revisions in the current proposed drawings must be clouded and noted.

Submission Requirements for Demolition or Relocation

Please submit DIGITAL FILES ONLY via email to: development@cityofbeaufort.org

Note: A public hearing must be held for Demolition or Relocation. All notification requirements must be met by the City.

- ☐ A written statement describing the history of the architectural significance of the structure to be demolished, the structural or physical condition of the structure, and the proposed use of the site after demolition or relocation. The statement should also include any recent attempt(s) to sell the property, or move the structure. A recent appraisal with comparisons is strongly encouraged. You may refer to *The Beaufort County Above Ground Resources Survey of 1997*, or consult city staff or the Historic Beaufort Foundation for verification of the date of construction and historic information.
- ☐ Tax map or plat showing the location of the property
- ☐ Color photographs of all sides of the structure.
- ☐ Color photographs of adjoining properties.
- ☐ A written report by an engineer, regarding the structural condition of the building, is required if the reason for demolition is related to the structural integrity of the building.

HISTORIC DISTRICT REVIEW BOARD
FEE SCHDULE

(As of July 1, 2020)

BOARD REVIEW FEES:

Single-family residential projects (board review)	$100.00
Multifamily and commercial projects (board review)	$250.00
Change After Certification	$100.00
Demolition (whole structure)	$250.00
Special Board Meeting	$500.00

Post facto applications shall be triple the normal fee.

STAFF REVIEW FEES:

Single Family and 2/3-unit buildings not in a historic district are exempt.

Type 1

Renovations/Improvements (not including additions), ≤ 50% of the value of the structures

Value	Fee
Improvements ≤ $5,000	$50
Improvements > $5,000 but ≤ $25,000	$50 + 0.25% x value above $5,000
Improvements > $25,000	$100 + 0.20% x value above $25,000

Type 2

- Any single-family and 2/3-unit residential addition in a historic district: $50
- All other additions: $500 base fee + $0.05/square foot of addition.

Type 3

Review for new construction and for renovations/improvements totaling over 50% of the value of the structure:

- Single-family and 2-3 unit residential in the historic district
- ≤ 10,000 square feet: $500 base fee + 0.05/square foot of building

- > $10,000 square feet: $1,000 base fee + $0.05/square foot of building for the first 100,000 square feet of building. For additional square footage over 100,000, $0.02/square foot.

CITY OF BEAUFORT
HISTORIC REVIEW BOARD
1911 BOUNDARY STREET
BEAUFORT, SOUTH CAROLINA 29902
(843) 525-7011 FAX: (843) 986-5606

CERTIFICATE OF APPROPRIATENESS

November 13, 2019

Robert Montgomery
Montgomery Architecture & Planning, Inc.
404 Ribaut Road
Beaufort, SC 29902

RE: 19-26 HRB.1 504 Prince Street – Renovation and New Construction

Dear Mr. Montgomery:

On November 13, 2019, the City of Beaufort Historic District Review Board (HRB) met to review your application for the demolition of an existing rear addition; the lifting of the building above the flood elevation and renovations to the house; the addition of a screened porch; and construction of a swimming pool and patio; and installation of new fencing in the Historic Preservation Neighborhood. The Board granted final approval of the project based on revised drawings that were submitted to the Board at the meeting, that eliminated the deck, enlarged the patio, and expanded the workshop length by 2'.

The request for demolition will be reviewed separately by the HRB, following a public hearing to be held at a subsequent HRB meeting.

This Certificate of Appropriateness applies only to the requirements of the Beaufort Historic District and does not supersede other City ordinances. Compliance with all other provisions of the City of Beaufort Code of Ordinances is required. Please contact the City Building Codes Office located at 1911 Boundary Street, (843) 525-7049, to apply for the necessary permits. A copy of this letter should be submitted with your application for a permit.

Be advised that the certificate will expire two years from the date of this letter as per Section 9.4.1of the *Beaufort Code*. If you make any changes in your project that are not part of the approved plan, you will need to submit an application for a Change After Certification.

If you have any questions, feel free to call the Planning Department at (843) 525-7011. Thank you for your patience and cooperation during the review process.

Sincerely,

John Dickerson
Acting Chair, Historic Review Board

Department of Community & Economic Development
1911 Boundary Street, Beaufort, South Carolina 29902
p. (843) 525-7049 / f. (843) 986-5606 / insp: (843) 525-7041
www.cityofbeaufort.org

PERMIT #: 200371
APPLICATION NUMBER: 20335
DATE ISSUED: 03/25/2020
TOTAL PERMIT FEES: $1,545.00

RESIDENTIAL BUILDING PERMIT

Parcel ID Number: **R120 004 000 0642 0000**
Project Description: **REPAIR/RENOV RESIDENTIAL**
Street Address: **504 PRINCE ST**
Flood Zone:
Construction Type:
Occupancy: Type:
Stories:
Project Cost: **$250,000.00**
Bedrooms:
Bathrooms:
Units:
Total SF:
Heated SF:

Owner Information	Applicant Information	Contractor Information
Owner: **CONSTRUCTION PARTNERS LLC**	Applicant: **SUTTON CONSTRUCTION CO**	Contractor: **SUTTON CONSTRUCTION CO**
Address: **PO BOX 13863**	Address: **809 CRAVEN ST**	Address: **809 CRAVEN ST**
CHARLESTON, SC 29422	**BEAUFORT, SC 29902**	**BEAUFORT, SC 29902**
Phone:	Phone: **843-252-5687**	Phone: **843-252-5687**
Email:	Email:	Email:
		License #: **115436**
		Expiration Date: **04/15/2020**

Project Description

MINOR DEMO. RAISE HOUSE, NEW FOUNDATION, NEW FRONT AND SIDE PORCH, NEW ASPHALT SHINGLE ROOF - PHASE I

Additional Notes:

Signatures: Applicant: _____ Building Dept: Bruce Skipper

Notes: Permits expire 180 days after the last inspection. All work must comply with approved application documentation. the requested inspection.

Sutton Construction Co.

949 Ribaut Road, Beaufort SC, 29902 | 843 252-5687 | suttonoffice1701@gmail.com

Wednesday, June 1, 2022

To: Bruce Skipper Beaufort Building codes

Subj: 502/504 Prince Street Permit re-assignment to Owner

Bruce,

Please accept this letter as notification that our company wishes to re-assign the permits issued for the two projects listed below to the owner, Mr. **Michael Kennedy**. Our company will not be doing any additional work on the properties as the owner desires to complete the work. At the time of permitting the property was two separate lots however those have now been combined into a single residential lot.

Permits issued:

1. **#200307**

   This project was completed and a final inspection completed by your staff. The owner is currently living in the residence.

2. **# 200371**

   This project is an accessary building that was partially completed with several inspections completed including foundation and some framing. This home was lifted out of the flood zone and currently sits ready to be finished.

Thankyou,

Mike Sutton

DEVELOPMENT REVIEW PROCESS

HISTORIC REVIEW BOARD APPLICATION

Community & Economic Development Department
1911 Boundary Street, Beaufort, South Carolina, 29902
p. (843) 525-7011 / f. (843) 986-5606
www.cityofbeaufort.org

Application Fee:
see attached schedule

OFFICE USE ONLY: **Date Filed:** _____ **Application #:** _____ **Zoning District:** _____
BCAGHS Survey: ☐ Yes ☐ No

Schedule: The Historic Review Board (HRB) typically meets the 2nd Wednesday of each month at 2pm. The complete schedule, along with the list of deadlines, may be found here - http://www.cityofbeaufort.org/historic-review-board.aspx

Submittal Requirements: All forms and information shall be submitted digitally. In addition to a complete application form, applicants shall submit the required items according to the checklists on the subsequent page.

Review Request: ☐ Conceptual ■ Preliminary ☐ Final ☐ Bailey Bill Approval* ☐ Change After Certification
**Requires a Bailey Bill – Part A Preliminary Review Application Form*

Pursuant to Section 6-29-1145 of the South Carolina Code of Laws, is this tract or parcel restricted by any recorded covenant that is contrary to, conflicts with, or prohibits the activity described in this application? ☐ Yes ☐ No

Applicant, Property, and Project Information

Applicant Name: Montgomery Architecture & Planning, Inc.

Applicant Address: 404 Ribaut Road Beaufort, SC 29902

Applicant E-mail: rm@monarchpl.com Applicant Phone Number: 843.522.8077

Applicant Title: ☐ Homeowner ☐ Tenant ■ Architect ☐ Engineer ☐ Developer

Owner (if other than the Applicant): Cindy & Michael Kennedy

Owner Address: 504 Prince Street

Project Name: Kennedy Residence

Property Address: 504 Prince Street

Property Identification Number *(Tax Map & Parcel Number)*: R120 004 000 0642

Date Submitted: October 18, 2019

Certification of Correctness: I/we certify that the information in this application is correct.

Applicant's Signature: Michael Kennedy Cindy Kennedy Date: 10-18-19

Owner's Signature: Michael Kennedy Cindy Kennedy Date: 10-18-19

DEVELOPMENT REVIEW PROCESS

HISTORIC REVIEW BOARD APPLICATION

Community & Economic Development Department
1911 Boundary Street, Beaufort, South Carolina, 29902
p. (843) 525-7011 / f. (843) 986-5606
www.cityofbeaufort.org

(The owner's signature is required if the applicant is not the owner.)

Required Project Information

Project Name: Kennedy Residence

Property Size in Acres: .09 Proposed Building Use: Residential

Nature of Work (check all that apply):

☐ New Construction, Primary Structure ☐ New Construction, Primary Structure ■ Alterations / Additions

■ Demolition* ☐ Relocation* **Demolition and Relocation requires a public hearing*

Building Square Footage (if multiple buildings, please list each one and their square footage by floor):
504 Prince - 1,350 sf

Is this project a redevelopment project: ☐ Y ☑ N

Are there existing buildings on the site? ☑ Y ☐ N if yes, will they remain? ☑ Y ☐ N

Provide a brief Project Narrative (if requesting Bailey Bill Approval, this section may be left blank):

This building was inundated with flood water from Hurricane Irma. A rear addition (10') is completely rotten, and we request permission to demolish this area (300 sf) and to raise the building to elevation 14.00 AMSL. Also proposed is to add a screen porch to the eastern elevation, joining to the kitchen entrance of 502 Prince Street with a common deck.

Included in the design proposal is a modest 8 x 20 in-ground pool, screened by surrounding structures and a new 12 x 20 garage structure.

CONTACT INFORMATION –

Attention: Julie A. Bachety, Administrative Assistant II
City of Beaufort Department of Planning & Development Services
1911 Boundary Street, Beaufort, South Carolina 29902
E-Mail: jbachety@cityofbeaufort.org: | Phone: (843) 525-7011 | Fax: (843) 986-5606

This is a "printer friendly" page. Please use the "print" option in your browser to print this screen.

OFFICIAL PAYMENTS
A service of ACI Payments, Inc.

Beaufort, City of, SC

Permits (POS)

Confirmation Number: 01736D
Payment Date: Tuesday, March 17, 2020
Payment Time: 11:10AM ET

Payer Information

First Name:	MICHAEL SUTTON
Country:	United States
Application Number:	20335
Address:	504 PRINCE ST
City, State and Zip Code:	BEAUFORT,SC,29902

Card Information

Card Type:	Visa
Card Number:	**********2629
Card Verification Number:	****

Payment Information

Payment Type:	Permits (POS)
Payment Amount:	$1,545.00
Convenience Fee:	$42.49
Total Payment:	$1,587.49

Thank you for using ACI Payments, Inc. If you have a question regarding your payment, please call us toll free at 1-800-487-4567. To make payments in the future, please visit our website at www.officialpayments.com.

Back

Copyright © 2020 ACI Payments, Inc. All Rights Reserved.
ACI Payments, Inc. is licensed as a money transmitter by the New York State Department of Financial Services, the Georgia Department of Banking and Finance, and by all other states and territories, where required. NMLS #936777.

City of Beaufort Building Inspection Report

PHONE # 843-592-1724 www.cityofbeaufort.org

This inspection does not relieve the owner, architect, engineer or contractor of any liability to construct the project to the adopted plans, specifications or building code(s)

Project:	**Date:** 7/28/20
Agency/ Contractor: Sutton	**Permit #** 20037
Address: 504 PRINCESS	
Inspector: Bob Williams	

Results: PARTIAL PASS **PASS** FAIL

Items Inspected:

Footings at Perimeter

Violations:

Provide plan change
Ensure top of footing is 12" below grade

OK to Pour

Comments:

NOT to include porches

City of Beaufort Building Inspection Report

PHONE # 843-592-1724 www.cityofbeaufort.org

This inspection does not relieve the owner, architect, engineer or contractor of any liability to construct the project to the adopted plans, specifications or building code(s)

Project:	**Date:** 8/11/20
Agency/ Contractor: Sutton	**Permit #** 20037
Address: 504 Prince St	
Inspector: Bob Williams	
Results: PARTIAL PASS PASS FAIL	

Items Inspected:

Core

Violations:

N/A

Comments:



MONTGOMERY ARCHITECTURE & PLANNING, INC.

www.monarchpl.com

Kennedy Residence
502 & 504 Prince Street
October 18, 2019

SOUTH ELEVATIONS OF 502 & 504

504 Prince 25 of 54



MONTGOMERY ARCHITECTURE & PLANNING, INC.

www.monarchpl.com

Kennedy Residence
504 Prince Street
October 18, 2019

504 PRINCE


504 Prince 27 of 54



504 Prince 28 of 54


504 Prince 29 of 54


504 Prince 30 of 54


504 Prince 31 of 54


504 Prince 32 of 54


504 Prince 33 of 54

INSPECTION FIELD SHEET 04/26/22
Printed by Cheyenne Peifer 10:16:13

INSPECTION: 74483 ELECTRICAL TEMP SVC PERMIT: 200371
STATUS: ISSUED 03/25/20
APPLICATION: 20335

LOC: 504 PRINCE ST
BEAUFORT

PROPERTY ID: R120 004 000 0642 0000

OWNER: CONSTRUCTION PARTNERS LLC

CONTRACTOR: SUTTON CONSTRUCTION CO
843-252-5687
TRADESMAN: CITY

REQUEST BY:

PROJ DESC: MINOR DEMO. RAISE HOUSE, NEW FOUNDATION, NEW FRONT AND SIDE
WORK ORDER:

CHECKLIST: COMMENT	P/F	AREA / COMMENT	COMPLY BY
	N		

INSPECTOR: BW RESULT: PASS
REQUESTED: PRIORITY:
SCHEDULED: COMPLETED: 06/01/20
UNPAID FEES: .00 Date Time

MILEAGE: .00 TIME: TRAVEL ONSITE

COMMENTS:

ALL INSPECTIONS:

INSPECTED	INSPECTOR	RESULT	INSP	DESCRIPTION
07/28/20	BW	PASS	2300	FOOTINGS
08/11/20	BW	PASS	2600	BOND BEAM/PIERS
08/20/20	DO	FAIL	3500	FRAMING
08/21/20	BW	PASS	2300	FOOTINGS
08/26/20	BW	FAIL	2600	BOND BEAM/PIERS
08/27/20	BW	PASS	2600	BOND BEAM/PIERS
09/09/20	BW	PASS	2600	BOND BEAM/PIERS
	BW		2310	SLAB
	MKM		2410	SURVEY (FOUNDATION)
	AP		2430	COMPACTION TEST
	AP		2450	TERMITE RECEIPT
	BW		2210	UNDERGROUND PLUMBING
	BW		3400	PLUMBING ROUGH IN
	BW		3300	GAS ROUGH IN
	BW		3200	HVAC ROUGH IN
	BW		3100	ELECTRICAL ROUGH IN
	BW		2860	FLASHING

BW	2850	WINDOWS
BW	2840	SHEATHING
BW	2830	NAILING
BS	2800	FLOOD CERT UNDER CONST
DO	3500	FRAMING
BW	2700	STRAPPING
BW	7900	FINAL INSPECTION
BW	6450	GAS FINAL
BW	6250	PLUMBING FINAL
BW	6150	HVAC FINAL
BW	6050	ELECTRICAL FINAL
BW	4600	ELECTRICAL PERM SVC
BS	4400	FLOOD CERT FOR PERM SVC
BW	4000	INSULATION
BW	3940	GAS TEST
BW	3900	SMOKE - CO DETECTOR

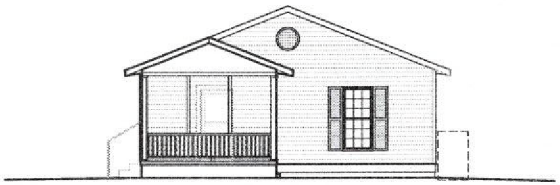

North Elevation

0 2 4 8 16

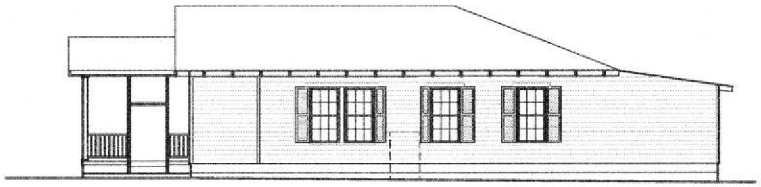

West Elevation
Existing

0 2 4 8 16

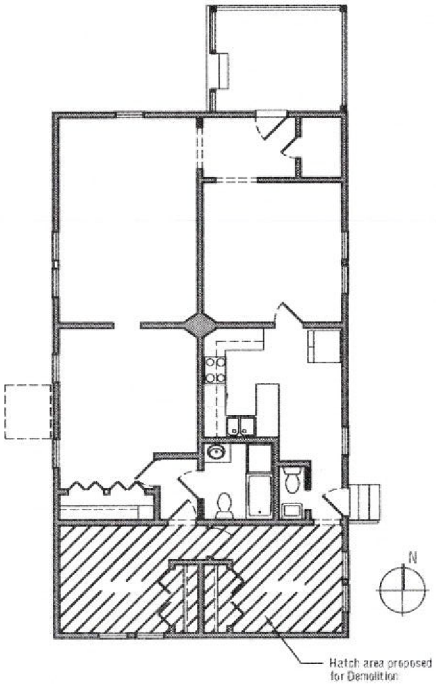

Floor Plan
Existing

0 2 4 8 16



East Elevation
Existing

0 2 4 8 16

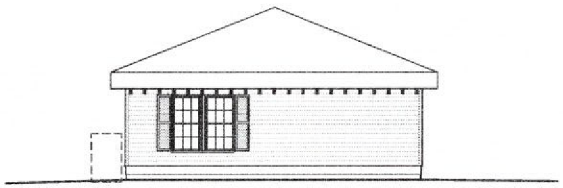

South Elevation

0 2 4 8 16

MONTGOMERY
ARCHITECTURE &
PLANNING, INC.

10-18-19

www.monarchpl.com

Kennedy Residence

504 Prince Street

Existing

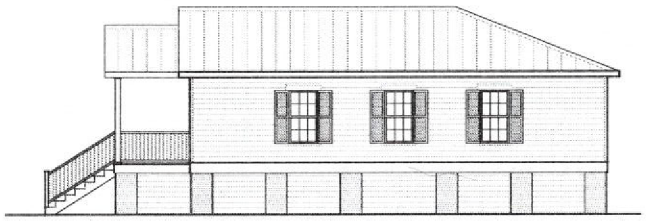

West Elevation

0 2 4 8 16



North Elevation

0 2 4 8 16

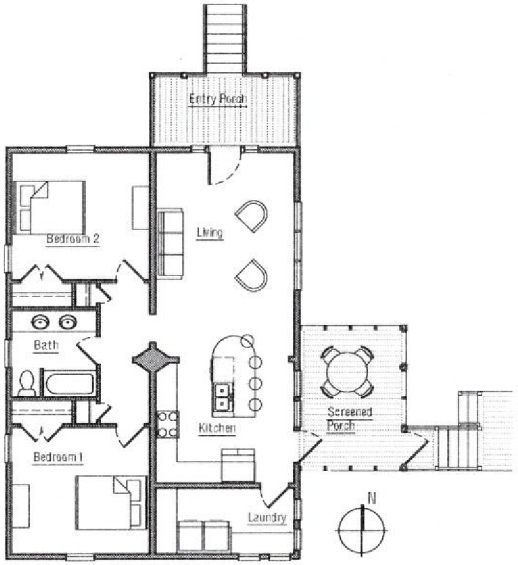



South Elevation

0 2 4 8 16



East Elevation

0 2 4 8 16

Floor Plan

0 2 4 8 16

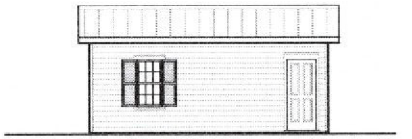

North Elevation
Workshop

0 2 4 8 16



East Elevation
Workshop

0 2 4 8 16

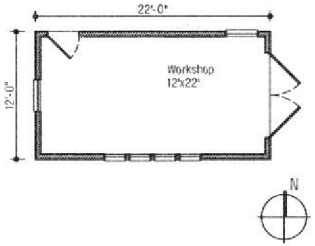

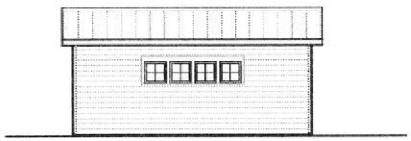

South Elevation
Workshop

0 2 4 8 16

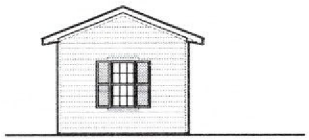

West Elevation
Workshop

0 2 4 8 16

Floor Plan
Workshop

0 2 4 8 16

MONTGOMERY
ARCHITECTURE &
PLANNING, INC.

10-18-19

www.monarchpl.com

Kennedy Residence

504 Prince Street and Workshop

Proposed Renovation

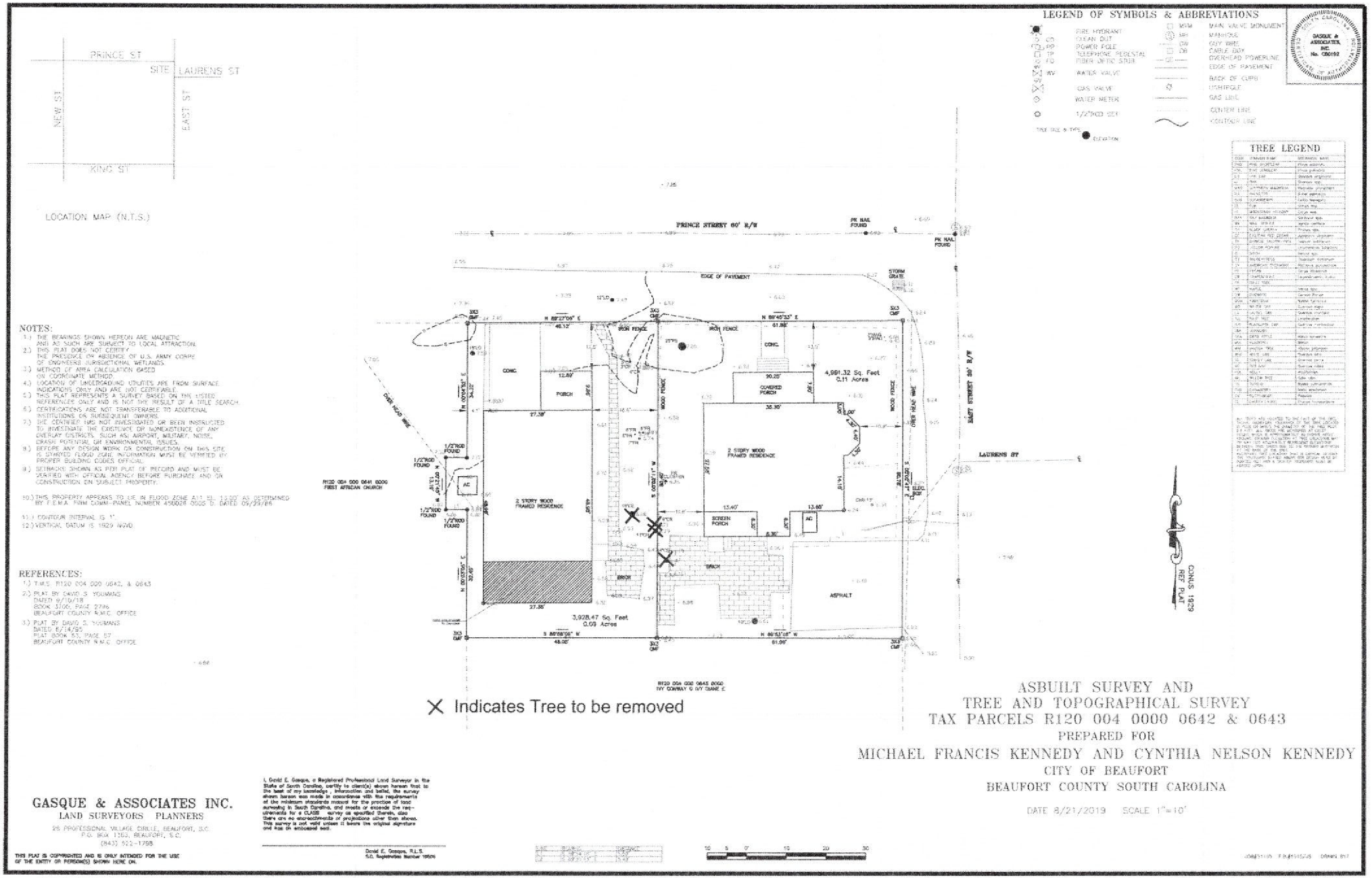
LEGEND OF SYMBOLS & ABBREVIATIONS
FIRE HYDRANT
CLEAN OUT
POWER POLE
TELEPHONE PEDESTAL
FIBER OPTIC STUB
WATER VALVE
GAS VALVE
WATER METER
1/2"ROD SET
MAIN VALVE MONUMENT
MANHOLE
GUY WIRE
CABLE BOX
OVERHEAD POWERLINE
EDGE OF PAVEMENT
BACK OF CURB
LIGHTPOLE
GAS LINE
CENTER LINE
CONTOUR LINE
TREE LEGEND
PRINCE ST
SITE
LAURENS ST
NEW ST
EAST ST
KING ST
LOCATION MAP (N.T.S.)
PRINCE STREET 60' R/W
EAST STREET 30' R/W
LAURENS ST
EDGE OF PAVEMENT
IRON FENCE
CONC.
PORCH
COVERED PORCH
2 STORY WOOD FRAMED RESIDENCE
SCREEN PORCH
BRICK
ASPHALT
4,991.32 Sq. Feet
0.11 Acres
3,928.47 Sq. Feet
0.09 Acres
R120 004 000 0641 0000
FIRST AFRICAN CHURCH
R120 004 000 0643 0000
IVY COMBAY G IVY DIANE E
CONUS 1929
REF PLAT
NOTES:
1.) THE BEARINGS SHOWN HEREON ARE MAGNETIC AND AS SUCH ARE SUBJECT TO LOCAL ATTRACTION.
2.) THIS PLAT DOES NOT CERTIFY THE PRESENCE OR ABSENCE OF U.S. ARMY CORPS OF ENGINEERS JURISDICTIONAL WETLANDS.
3.) METHOD OF AREA CALCULATION BASED ON COORDINATE METHOD.
4.) LOCATION OF UNDERGROUND UTILITIES ARE FROM SURFACE INDICATIONS ONLY AND ARE NOT CERTIFIABLE.
5.) THIS PLAT REPRESENTS A SURVEY BASED ON THE LISTED REFERENCES ONLY AND IS NOT THE RESULT OF A TITLE SEARCH.
6.) CERTIFICATIONS ARE NOT TRANSFERABLE TO ADDITIONAL INSTITUTIONS OR SUBSEQUENT OWNERS.
7.) THE CERTIFIER HAS NOT INVESTIGATED OR BEEN INSTRUCTED TO INVESTIGATE THE EXISTENCE OR NONEXISTENCE OF ANY OVERLAY DISTRICTS, SUCH AS: AIRPORT, MILITARY, NOISE, CRASH POTENTIAL OR ENVIRONMENTAL ISSUES.
8.) BEFORE ANY DESIGN WORK OR CONSTRUCTION ON THIS SITE IS STARTED FLOOD ZONE INFORMATION MUST BE VERIFIED BY PROPER BUILDING CODES OFFICIAL.
9.) SETBACKS SHOWN AS PER PLAT OF RECORD AND MUST BE VERIFIED WITH OFFICIAL AGENCY BEFORE PURCHASE AND OR CONSTRUCTION ON SUBJECT PROPERTY.
10.) THIS PROPERTY APPEARS TO LIE IN FLOOD ZONE A11 EL. 13.00' AS DETERMINED BY F.E.M.A. FIRM COMM-PANEL NUMBER 450026 0005 D. DATED 09/29/86
11.) CONTOUR INTERVAL IS 1'.
12.) VERTICAL DATUM IS 1929 NGVD.
REFERENCES:
1.) T.M.S. R120 004 000 0642, & 0643
2.) PLAT BY DAVID S. YOUMANS DATED 9/10/18 BOOK 3700, PAGE 2796 BEAUFORT COUNTY R.M.C. OFFICE
3.) PLAT BY DAVID S. YOUMANS DATED 6/14/95 PLAT BOOK 53, PAGE 57 BEAUFORT COUNTY R.M.C. OFFICE
X Indicates Tree to be removed
ASBUILT SURVEY AND
TREE AND TOPOGRAPHICAL SURVEY
TAX PARCELS R120 004 0000 0642 & 0643
PREPARED FOR
MICHAEL FRANCIS KENNEDY AND CYNTHIA NELSON KENNEDY
CITY OF BEAUFORT
BEAUFORT COUNTY SOUTH CAROLINA
DATE 8/21/2019 SCALE 1"=10'
GASQUE & ASSOCIATES INC.
LAND SURVEYORS PLANNERS
26 PROFESSIONAL VILLAGE CIRCLE, BEAUFORT, S.C.
P.O. BOX 1363, BEAUFORT, S.C.
(843) 522-1798
THIS PLAT IS COPYRIGHTED AND IS ONLY INTENDED FOR THE USE OF THE ENTITY OR PERSON(S) SHOWN HERE ON.
I, David E. Gasque, a Registered Professional Land Surveyor in the State of South Carolina, certify to client(s) shown hereon that to the best of my knowledge, information and belief, the survey shown hereon was made in accordance with the requirements of the minimum standards manual for the practice of land surveying in South Carolina, and meets or exceeds the requirements for a CLASS survey as specified therein, also there are no encroachments or projections other than shown. This survey is not valid unless it bears the original signature and has an embossed seal.
David E. Gasque, R.L.S.
S.C. Registration Number 10506



East Street Elevation

0 4 8 16 32



Prince Street Elevation

0 4 8 16 32

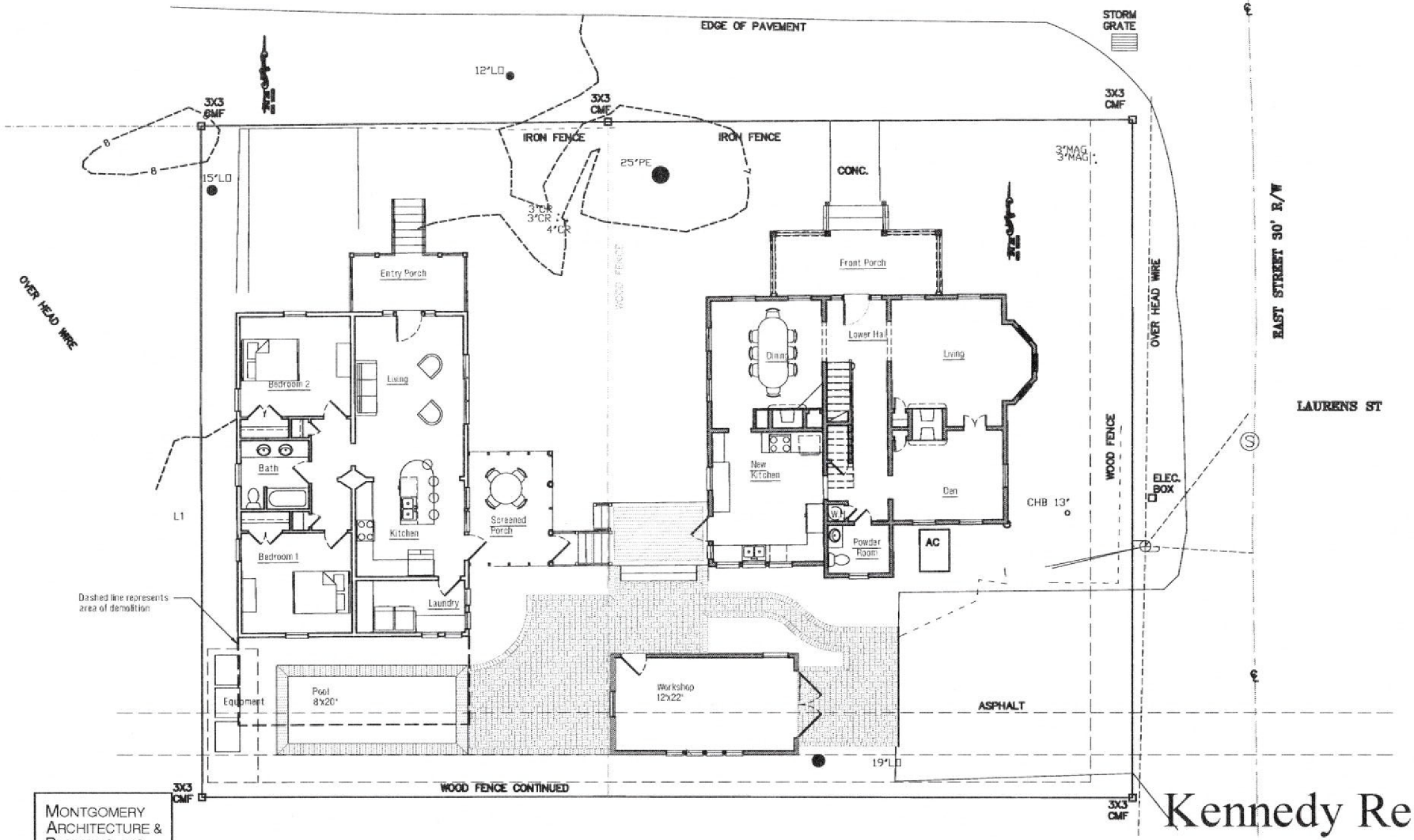

Site Plan

0 2 4 8 16

MONTGOMERY ARCHITECTURE & PLANNING, INC.

10-18-19

www.monarchpl.com

Kennedy Residence

504 Prince Street

Proposed Renovation

Electrical Symbol Legend

	Single Pole Switch		Duplex Receptacle Outlet
	3-Way Switch		Quadruplex Receptacle Outlet
	4-way Switch		220 Receptacle Outlet
	Dimmer Switch (refer to schedule)		Ground Fault Interrupt Outlet
	Weather Proof Switch (refer as noted)		Weather Proof Outlet
	Earth Switch		Outlet with special mounting height
	Thermostat		Rear duplex receptacle outlet
	Smoke Detector		Junction Box
	Door Bell		Wall Mounted Exterior
CH	Chimes		Video/Voice
	Electric Panel		Data
	Recessed Incandescent Fixture		Cable TV
	Ceiling Mounted Fixture		Vacuum outlet
	Pendant Mounted Incandescent Fixture		Exhaust fan
	Wall Mounted Incandescent Fixture		Exhaust fan with light
	Under Cabinet LED Fixture		ceiling fan
	Cabinet Led Strip Lighting		
G	Gas Hookup		Exterior Light

General Electrical & Mechanical:

1. Coordinate all new appliances with electrical and gas as per manufacturer's specifications.
2. Coordinate smoke detectors as per code requirements.
3. Provide disconnects as per code requirements.
4. All fixtures are to be dimmable.

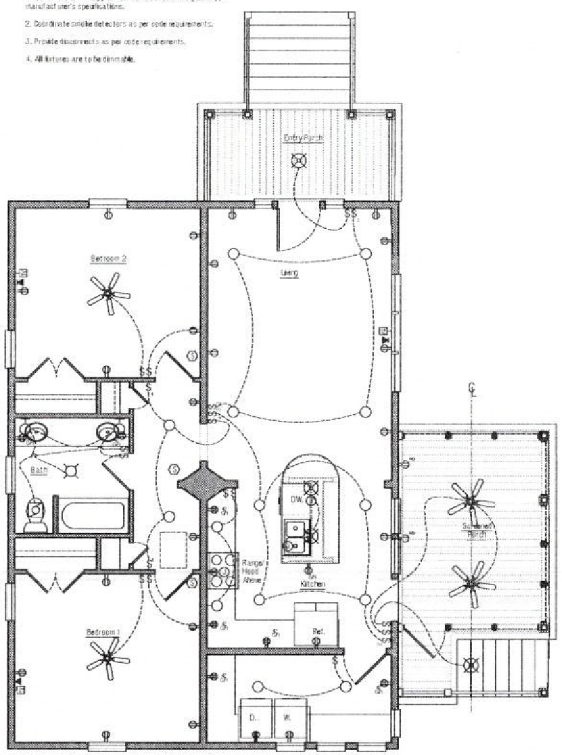

Schematic Electrical Plan — 1"=1'-0" | 09

MECHANICAL SYMBOL LEGEND

D.G	Return ceiling
S.G	Supply ceiling
T	Thermostat

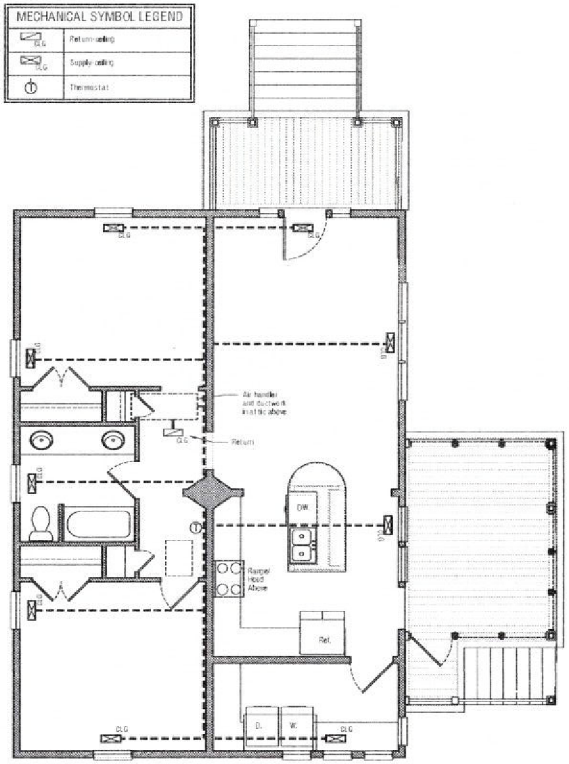

Schematic Mechanical Plan — 1/4"=1'-0" | 01

MONTGOMERY ARCHITECTURE & PLANNING, INC.
www.monarchpl.com

404 Ribaut Road
Beaufort, SC 29902
Phone: (843) 522-8077
Fax: (843) 522-8011

DATE	ISSUE
5-17-21	Permit

Schematic Mechanical and Electrical Plans
Kennedy Cottage Renovation
504 Prince Street
Beaufort, South Carolina

ME.1

Project No. 346
Drawn By AF
Checked By RCM
© 2020 All Rights Reserved

PROJECT SPECIFICATIONS

Division 1 - General Conditions

1. All work to be performed in accordance with the Contract Incl. Documents, Building Code and local regulatory agencies.
2. G.C. is responsible for procurement and payment of all required permits and fees associated with the construction process.
3. The G.C. shall guarantee all Work for a period of 1 year. G.C. shall warranty all roofing and waterproofing for at least 10 years, s.o.w.
4. The G.C. shall carry all necessary insurance as required by law.
5. The Owner shall acquire Builder's Risk insurance to maintain fire, extended coverage, vandalism insurance for 100% of the insurable values of all construction on the site.
6. The G.C. shall check, coordinate and verify all dimensional and construction details before starting any construction. Report any discrepancies to the Architect.
7. If a discrepancy is discovered between the information included on the drawings and that described on Sheet N1 the more stringent of the two shall govern. If a discrepancy is discovered within the drawings the following shall apply: words govern over drawings, details govern over sections. NOTE: the Architect spent discovery or for clarification.
8. Pre Construction meeting to be attended by Architect, Contractor and Sprinkler/Fire Suppression Engineers. Progress Meetings to be held as required by not less than one per month. Attendance to be the same as Pre-Construction meeting.
9. Drawings are diagrammatic in nature and intended to convey the intent of the work. Use dimensions indicated and/or field verification. DO NOT SCALE DRAWINGS.
10. G.C. to coordinate the work of all trades required to complete the work of this site.
11. All work to be performed such that the existing portions of the site and of the existing buildings scheduled to remain are not damaged. Disinfectant temporary barriers and walk as directed with Owner prior to start of construction.
12. G.C. is to provide a properly functioning portable toilet, and sanitary facilities on site during construction. Do not use existing facilities without Owner's permission.
13. Unless otherwise stated in the Bid, the G.C. may use existing potable water and electric service for construction purposes, provided that services are not accessed through the existing portions of the building.
14. Coordinate owner required power and water with temporary service for dock.
15. The G. C. shall coordinate any disruptions to existing utilities with Owner. Notify Owner prior to scheduled any utility shut-downs.
16. Construction Hours: Permission will only be granted access to work site before 7:00 a.m. Monday through Friday or before 9:00 a.m. on Saturday. All work shall cease By 7:00 p.m. each day.
17. The G.C. shall receive approval from the Owner or Architect in writing before submitting any "or equal" products into the Work.

18. ALLOWANCES:

a. The G.C. shall include the following ALLEDRANCES with the Contract Sum. Any items specified elsewhere in the Construction Documents shall not be included within the Allowance.

b. The Allowance shall cover the cost of the materials and equipment to deliver to the project. Labor, installation costs, and OH+P shall be included in the Contract Sum. If the cost, when determined is more or less than the amount of the Allowance, the Contract Sum will be adjusted accordingly by Change Order.

c. G.C. shall provide bid unit Prices for all items covered in the allowance to the Owner.

d. Allowance Include:

1) Door Hardware not specified elsewhere: $ 5.00.00.
2) Interior Door Hardware $ 250 per leaf.
3) Plumbing Fixtures $ 3,000.00.
4) Cabinet Hardware $ 3,000.00.
5) Lighting Fixtures $ 10,000.00.
6) Tile Allowance $ 15,000 s.f. (Ready).
7) Appliances $ 6,000.00.

20. ALTERNATES:

a. The G.C. shall provide alternative costs for the following items for Owner's review and selection prior to start of construction.

b. Include Base Bid Items as included on Drawings or Specs within the Contract Sum and other the alternates as an Additional Credit to the Contract Sum.

c. Alternates Include:

1) Exterior windows by Contractor's choice, Architect approval.

21. SUBMITTALS:

a. If specifically requested on this Sheet, the G.C. shall submit product data, certificates, samples or mockups to the Owner for verification/approval prior to performing work.

b. G.C. shall provide (1) one hardcopy copy to the Architect and (1) electronically.

c. SUBMITTAL LIST Includes:

1) Windows
2) Hardware
3) Interior Doors
4) Paint Colors
5) Flooring
6) Exterior Metal Handrail
7) Interior Trim Profiles
8) Kitchen cabinets and island
9) Bathroom vanity
10) Brick
11) Garage Slab Sealing
12) Metal Roof

22. PROJECT CLOSEOUT:

a. The G.C. shall clean all surfaces, windows, etc. prior to final completion.

b. Provide the following information to the Owner at project Completion in a three-ring binder:

1) Submittal of Product Data, Certificates and Warranties
2) Names and phone number of all sub-contractors.
3) Certificate of Occupancy / Building Dept. Approval
4) Owner Training of installed systems / equipment
5) Lien Waivers from G.C. and all Subcontractors
6) Punch List and Touch-up Paint Identification

23. PROJECT DESIGN PARAMETERS:

a. Code Analysis: 2018 IRC
b. Wind Load: 140 mph
c. Roof Loads:
1) Live Load: 25 psf
2) Dead Load: 10 psf
d. Floor Loads:
1) Live load: 40 psf
2) Dead Load: 10 psf
e. All new windows shall have a DP rating of 50 or as otherwise permitted by Building Official. Existing windows shall have hurricane shutters.

Division 2 - Site Work

1. Coordinate all underground work with the prior to digging.
2. Comply with all Federal, State, and Local Regulations regarding excavation, erosion and dust control, tree protection, and safety requirements.
3. All layout, staking, and survey work to be the responsibility of the Contractor.
4. Soils and material testing are to be coordinated by G.C. contracted by Owner.
5. Contact Geotechnical Engineer for inspections at recommended intervals during soils work.
6. Remove all organic material and vegetation located within the limits of work for all areas on the Drawings.
7. Stockpile suitable excavated material to the greatest extent possible. Coordinate stockpile location with Owner. Unused material to be removed from the site by the G.C. prior to final completion.
8. Prepare new planting, compaction, soils, etc.) to receive furnishings.
9. General Fill: Consist free of roots, debris and rocks greater than 12" in dia. All fill below slabs to consist of clean, free draining sand within 15% fines, unless otherwise noted on drawings.
10. Granular fill: crushed stone, free of clay, free of debris, material and debris.
11. Filling & Backfilling to be placed & compacted in layers not more than 8 inches thick. Place no thicker final grade does not settle.
12. Compacted fill: Provide 4" minimum, compacted fill below all slabs. Compact to 95% of maximum dry density, s.o.w.
13. Provide and install new paving, walkways, and site amenities as indicated on the Construction Drawings.
14. Grade site for positive drainage away from structures, sidewalks, and driveways.
15. Site Restoration: G.C. shall restore any damaged areas of the existing site, outside of the limits of Work, back to its original condition. Provide minimum of 4" topsoil for landscape, including over disturbed areas.
16. Extend new work to connect into existing utilities. If new utilities are required provide and install in accordance with Local Utility. If existing utilities are to be abandoned, cut off, cap and/or remove as necessary for the Work.
17. Make new utility connections as necessary.
18. TERMITE CONTROL:

a. All soil below grade of new and existing structures including decks and porches are to be treated with insecticide to prevent termite infestations.

b. Apply treatment immediately prior to installation of vapor barrier under slab-on-grade and soil within 10 feet of building perimeter for a depth of 3 feet below adjacent exposed footings.

c. Submit (to Owner) inspection report and maintenance data indicating retreatment schedule. Provide extended 5-year warranty to include coverage for damage and repairs to building and building contents caused by termites, repair of damage, and retreat where required. Inspect and report annually to Owner in writing.

Division 3 - Concrete

1. Reinforcement:
2. Provide cast-in-place concrete for general building construction including footings, foundations, slab-on-grade, walkways, driveways, etc. as indicated on Drawings.
3. Typical 28-day Compressive Compressive Strength (f'c): All Concrete shall be normal weight mix:
a. Slab on Grade = 3,000 psi.
b. Footings/Grade Beams = 3,500 psi
4. Structural Concrete shall conform to ACI 301 and have the following slumps and aggregate requirements:
a. Footings and Grade Beams: 3" slump, aggregate size ASTM #57
b. Beams and Slabs: 4" slump, aggregate size ASTM #57
5. Reinforcing steel: ASTM A615, Grade 60, Min. bar shall be #3 bar diameters or 9.5 inches o.c.s. All reinforcing steel shall be detailed, fabricated and installed in accordance with ACI 318, ACI 315 latest edition.
6. Welded Wire Fabric: ASTM A185 or ASTM A497. Lap all edges 1'-0" each minimum.
7. Reinforcement shall be securely held in place while placing concrete. If required, additional bars and stirrups shall be provided by the G.C. to furnish support for bars.
8. All footings shall rest on undisturbed natural materials or chemically compacted vibratory sled or tamper should be used to densify any soils in the bottom of the footing trenches loosened during excavations.
9. Formwork: G.C. shall erect adequate formwork to conform to shape, form and lines indicated on the Drawings. Adequate bracing shall be provided. Plywood or other products may be used. Formwork to be constructed with sufficient strength to withstand hydrostatic head without deformation in excess of standard tolerances.
10. Footing sizes shown are for footings constructed with side forms. If soil material can hold a vertical shape, it can be used as areas of form provided footing width is increased 3" in each horizontal direction. All disturbed material shall be removed from excavation before & during placement of concrete.
11. G.C. shall verify dimensions and locations of all slots, pipe sleeves, anchor bolts, floor drains, etc. as required for all of the trades before concrete is poured. All plumbing slots shall be filled with concrete to the same depth as the floor slab after piping is installed.
12. Provide the following concrete coverings over reinforcing:
a. Footings: Bottom and unformed edges: 3" clear
b. Slabs on Grade: Single mat centered
13. Place concrete per ACI 304, use central mechanical vibrator for all concrete. Limit maximum free drop of concrete to 5 feet, avoiding that they are rigid, plumb, and level.
14. G.C. shall repair all defects to the slab floor finish caused by construction traffic prior to placement of the finish floor.
15. CONCRETE SLAB FINISHING:
a. All exterior concrete to be sloped for drainage and have jet tied soft finish.

Division 4 - Masonry

1. Masonry construction shall conform to ACI Building Code Requirements for Masonry Structures (ACI/ASCE 530) and Specifications for Masonry Structures (ACI/ASCE 5.10.1) Latest.
2. All Concrete Masonry Units shall be reinforcing as per structural drawings.
3. Masonry units shall conform to ASTM C90 with min. Compressive Strength of 1900 psi on net section, to be tested per same Compressive Strength to Masonry (f'm) of 1,500 psi.
4. MORTAR: Use Type "S" mortar when pointing (MV) and Brick Masonry. Refer Brick Tech Notes 7 & 10 (ASTM C270 and ASTM C926/C91).
5. Provide steel wall reinforcement in Structural plans. In addition, provide steel wall adjacent to all openings, at underside of louver sills and corners.
6. Provide full mortar bearing around all steel wall reinforcement.
7. Concrete or grout filled cells shall be vibrated during placement using a two-at type vibrator.
8. MASONRY REINFORCING: Reinforcement shall conform to ASTM A615, Grade 60. Provide the following bar sizes:
a. Reinforcing for filled cell: shall conform to ASTM A615, Grade 60. Provide the following bar sizes:
1) #5 bars @ 24"
2) #5 bars @ 32"
3) #5 bars @ 48"
4) #7 bars @ 32"
5) #7 bars @ 48"
10. Maintain 3/8" joints, provide full bed mortar. Maintain uniformity of joint thicknesses.
11. Protect work during construction to prevent water infiltration. Wastage to masonry units, and cleanliness of mortar for all fill the air space. Do not lay masonry units that are wet or frozen.
12. OPEN PARPERS:
a. Old Carolina Brick Co. equivalent.
13. BRICK MEMBER
a. Clay Brick
14. BRICK MORTAR
a. Color: T.B.D.
b. Joint Type: Flush

Division 5 - Metals

1. MISCELLANEOUS METALWORK:
a. All metal connectors and fasteners suitable for environment in use except those specifically required to be stainless steel, shall be hot-dip galvanized steel after fabrication and meet ASTM A153. Concealed metal connectors, such as hurricane straps, hooks, and anchors within the structure shall be a min. 3.50" thick and shall be hot-dip galvanized per ASTM A653 or ASTM A123. Metal connectors or approved equivalent corrosion resistant material may be substituted.
b. Galvanize steel to be installed with exterior walls, masonry, pressure treated wood, preservative treated wood, ASTM A653 min. 1.25 oz/ft. Repair any damaged galvanized finishes per SSPC Paint 20.
c. All connectors, fasteners, hangers, bolts, screws, etc. in contact with treated wood are to be stainless steel.
d. All joist hangers, tie-downs, strapping, etc. shall be min. by Simpson, s.o.
e. All miscellaneous metal shall be fabricated from heavy gauge ferrous metals.
2. POWDER COATED STEEL HANDRAILING:
a. Manufacturer: Contractor choice
b. Field verify all shop fabrication.
c. Metal: Powder coated steel
d. Color: Black
e. Field verify existing rail dimensions prior to installation).
f. Provide all necessary blocking

Division 6 - Wood and Plastics

1. Provide and install all framing, sheathing, blocking, anchors, fasteners, tie downs, strapping, hangers, and other framing items in accordance with IRC 2018.
2. Lumber Standards: Comply with PS 20-20 for all grades. Each piece shall be identified by grade mark of an agency certified by the American Lumber Standard Committee's Board of Review or by an agency approved by the local building official. Identification shall be on a side or end which will be exposed to view in the finished building. Provide dressed lumber, S4S, unless rough lumber is specifically indicated.
3. Maximum Moisture content: 19 percent
4. Lumber to be Southern Pine, Grade #2 or better. All studs to be 2x6 at 16" o.c. s.o.w. All floor joists to be 2x10 at 16" o.c. s.o.w.
5. All timber framing to be Southern Yellow Pine, Grade Dense Select Structural (DSS).
6. All wood in direct contact with concrete or masonry to be pressure treated #1 dense KDAT.
7. Provide bridging at mid-span, min. of one bridge per bay of floor joists, 2"-2" x 4" min. At spans between 8ft and 16ft provide staggered solid block bridging at midspan.
8. All decks shall be 2x lumber, construction grade or better and shall be pressure treated in accordance with manufacturer instructions. Top plates shall be doubled and interlocking at corners and wall intersections. Double between all bottom plates and decking.
9. SHEATHING AND SUBFLOORING:
a. Exterior Walls & Roof sheathing to be 1/2" thick APA Rated Sheathing, Exposure Glass Exterior, Structural I span rating of 24/0 in.
b. Structural Sheathing to be laminated perpendicular to framing with end to staggered over the framing and secured be screws.
c. Subflooring and underlayment to be glued and screwed to wood framing.
d. Any sheathing to be in contact with concrete to be ACQ pressure treated ES CDX plywood.
10. EXTERIOR:
a. Exterior Wall Sheathing:
1) Manufacturer: Contractor's Choice
2) Style: German Siding
3) Product: To match existing
4) Maximum exposure: matched siding
5) Thickness: 5/4" x 7/8"
6) Finish: Painted
7) Color: T.B.D.
b. Exterior trim on fence KDAT pt, as per drawings
c. Exterior Doors at Stairs: 5/4 x T&G Garage
d. Exterior Doors at Screened Porch: 5/4 x T&G Garage
e. Exterior Porch Railings: 5/5 T&G Cypress.
f. Exterior Hand Rail at Entry Porch: #1 Dense Select KDAT pt., square profile
g. Exterior Rail Cap: #1 Dense Select KDAT PT.
h. Board Screens: Provide at the glass impact screen where indicated on drawings. Screen located below railings such as screen insert to be backed with galvanized 1/4 x 2.4 hardware cloth.
i. Impact Screens for all Screenable System, aluminum frame channel and vinyl cap, color Bronze, in accordance with manufacturer's written instructions. Install frame secure in largest length possible.
j. Exterior Columns: 6x6 DuraPine by Cox Industries, Inc.

11. INTERIOR:
a. Interior Floors: Owner selection & approval
b. Interior Standing/Running Trim and Door/Window Frames: for a clear/stain: Poplar, Select. Sundried and min. 1 base primer and 2 coats paint
12. PLASTIC SIMULATED WOOD (PVC):
a. Products: Azek or equivalent for continuous fascia edge.
b. Painting: Pre-bore surface to be painted as clean, dry, and free of dust, loose or peeling paint, mildew, chalk, grease and any other surface contaminants before paint application. Brush-out holes with Oil Base Primer or a UV resistant acrylic caulk.
1) Use 100 percent acrylic latex or 100 percent acrylic latex with urethane or other paint with a light reflectance value (LRV) equal to or greater than 55 units.
2) Follow the paint manufacturer's application recommendations.

13. CABINETS:
a. Wood: architectural cabinets for a transparent or opaque finish: Maple, Shaker style flat panel. Sundried and min. 1 base primer for paint choice.
b. Wood: architectural cabinets for paint finish: Pine stock and Birch plywood. Shaker style flat panel. Soft close, full extension drawer slides.
c. Stone countertop:
1) Kitchen: Selection by Owner, Contractor to provide sample
2) Laundry: Selection by Owner, Contractor to provide sample
3) Bath: Selection by Owner, Contractor to provide sample
d. Cabinet Doors and Drawer Fronts: Full overlay, Shaker style.
e. Accessories: Shop-assembled cabinet for delivery to site and easily handled and to permit passage through building openings.
i. Provide cut outs for plumbing fixtures and cutout bases.
g. Set and secure cabinets plumb, level and true to line. Avoid application of concrete during placement.
h. Use fixture attachments in concealed locations for wall mounted components.
i. Use concealed joint fasteners to align and secure adjoining cabinet units.
j. Countertops of Kitchen Island:
1) Wood species: Heart Pine
2) Edges: To match stone countertop
k. Cabinet Hardware:
1) Selection by Owner

Division 7 - Thermal and Moisture Protection

1. SPRAY FOAM INSULATION:
a. Walls: to be R-19 closed cell foam insulation.
b. Roof: to be R-49 open cell foam insulation.
c. Floor: to be R-49 closed cell foam insulation.
2. VAPOR BARRIERS:
a. Provide 10 mil poly vapor barrier under all concrete slabs.
b. Install TUFF R Wall & Roof Underlayment (ASTM D226), Type II, s.o.w. at exterior wall.
c. At roof decks, set tile over deck & Water sheds high temperature, self-adhering, roofing underlayment.
3. FLASHING AND SEALANTS:
a. Composition flashing to be 6" or 12" (as space allows) 20 mil, pressure sensitive waterproofing tape, ISA 20 by Window Wrap or equal. Apply at 50°F or above.
b. Through-wall counter flashing and Oil Base flashing to match roof metal.
c. Self-adhering flexible flashing to head/sill/jamb at exterior window/door rough openings. Composite membrane to consist of 28 mil, rubberized asphalt laminated to 4 mil cross laminated high-density polyethylene film.
d. Install sheet metal at drains, flashings, gutters, etc. in accordance with SMACNA Sheet Metal Manual
e. Typical joint sealants: to be polyurethane non-sag gunnable elastomeric sealant complying with ASTM C920, Class 25, Single component to suit the application, color selected to match adjacent finishes.
f. Latex caulk at all dry joints.
g. Kitchen, Bath, & Wet Locations Sealants: are to be Silicone non-sag gunnable sealant complying with ASTM C920, Class 25 with mildew-cide.
h. For Joints Exposed to View, Unless Otherwise Indicated: Acrylic latex, water-based, single part, paintable sealant, white.
4. ROOFING:
a. STANDING SEAM METAL ROOF:
1) MU50 Roof Panel to be by Union Corrugating Company.
2) Panel with: 16"
3) Weight: 26 gauge
4) Color: T.B.D. - verify with Owner
5) Standard fasteners and trim color to match Roof metal.
6) Install to meet manufacturer requirements and building wind load requirements for this project.
7) Union Corrugating Company, Attn: Jerry Shirley, 912.412.0457
jshirley@unioncorrugating.com; www.unioncorrugating.com
b. Roof warranty: Provide MFG 25-year warranty against rupture or perforation or from structural failure due to wind speeds not exceeding design conditions. Provide 20-year warranty for finish against chipping, cracking, blistering, fading, chalking, and flaking. Provide installer written 10-year warranty from the date of acceptance guaranteeing materials and workmanship for weather tightness, weather tightness with applicable laws.

Division 8 - Doors & Windows

1. Install windows and doors per manufacturer's requirements.
2. Window and door flashing to be Dupont System or equivalent.
3. Use 2.0 mil weather guard wrap at jamb and head. Ensure down 10" over sill flashing.
4. WINDOWS:
a. By Contractor: Architect Approval
1) Exterior Finish: To match existing
2) Exterior Finish: To match existing
3) Interior Finish: To match existing
4) Hardware: Selection by Owner
5) Glazing: Insulated Low E (tempered as required by code) with argon gas filled airspace
6) Tempered or impact according to code
7) Screens: Selection by Owner
5. EXTERIOR DOORS:
a. Existing Doors to be cleaned, patched, sanded and repainted.
6. INTERIOR DOORS:
a. All interior doors are to be solid wood units (1-3/8") pre-hung with hinges to match door hardware
7. HARDWARE: Door Hardware to be provided and installed to suit application. Door Stops, Hinging and Cabinet types with Owner prior to ordering hardware. (PS- Allowances)

Division 9 - Finishes

1. Refer to Drawings and Finish Schedule for locations.
2. GYPSUM WALL BOARD:
a. Contractor to furnish, install and finish all gypsum wall board as indicated.
b. All materials herein detailed shall be manufactured by USG, Gladstone or equal and shall be applied in accordance with the manufacturer's directions. Walls and shall be 1/2" unless otherwise noted on Drawings. Wallboard for ceilings shall be 5/8". Wallboard for all fire blocking, as shown on the project shall be 1/2" cement board by Hardie Board.
c. Joint components shall be Ready-Mixed Joint Compound and used according to applicable directions.
d. Joint compound shall be applied approximately 4" wide over joint in a thin uniform layer to all joints and angles to be reinforced. Reinforcing Tape shall be applied immediately

2) Style: German Siding
3) Product: To match existing
4) Maximum exposure: matched siding
5) Thickness: 5/4" x 7/8"
6) Finish: Painted
7) Color: T.B.D.
b. Exterior trim on fence KDAT pt, as per drawings
c. Exterior Doors at Stairs: 5/4 x T&G Garage
d. Exterior Doors at Screened Porch: 5/4 x T&G Garage
e. Exterior Porch Railings: 5/5 T&G Cypress.
f. Exterior Hand Rail at Entry Porch: #1 Dense Select KDAT pt., square profile
g. Exterior Rail Cap: #1 Dense Select KDAT PT.
h. Board Screens: Provide at the glass impact screen where indicated on drawings. Screen located below railings such as screen insert to be backed with galvanized 1/4 x 2.4 hardware cloth.
i. Impact Screens for all Screenable System, aluminum frame channel and vinyl cap, color Bronze, in accordance with manufacturer's written instructions. Install frame secure in largest length possible.
j. Exterior Columns: 6x6 DuraPine by Cox Industries, Inc.

11. INTERIOR:
a. Interior Floors: Owner selection & approval
b. Interior Standing/Running Trim and Door/Window Frames: for a clear/stain: Poplar, Select. Sundried and min. 1 base primer and 2 coats paint

12. PLASTIC SIMULATED WOOD (PVC):
a. Products: Azek or equivalent for continuous fascia edge.
b. Painting: Pre-bore surface to be painted as clean, dry, and free of dust, loose or peeling paint, mildew, chalk, grease and any other surface contaminants before paint application. Brush-out holes with Oil Base Primer or a UV resistant acrylic caulk.
1) Use 100 percent acrylic latex or 100 percent acrylic latex with urethane or other paint with a light reflectance value (LRV) equal to or greater than 55 units.
2) Follow the paint manufacturer's application recommendations.

13. CABINETS:
a. Wood: architectural cabinets for a transparent or opaque finish: Maple, Shaker style flat panel. Sundried and min. 1 base primer for paint choice.
b. Wood: architectural cabinets for paint finish: Pine stock and Birch plywood. Shaker style flat panel. Soft close, full extension drawer slides.
c. Stone countertop:
1) Kitchen: Selection by Owner, Contractor to provide sample
2) Laundry: Selection by Owner, Contractor to provide sample
3) Bath: Selection by Owner, Contractor to provide sample
d. Cabinet Doors and Drawer Fronts: Full overlay, Shaker style.
e. Accessories: Shop-assembled cabinet for delivery to site and easily handled and to permit passage through building openings.
i. Provide cut outs for plumbing fixtures and cutout bases.
g. Set and secure cabinets plumb, level and true to line. Avoid application of concrete during placement.
h. Use fixture attachments in concealed locations for wall mounted components.
i. Use concealed joint fasteners to align and secure adjoining cabinet units.
j. Countertops of Kitchen Island:
1) Wood species: Heart Pine
2) Edges: To match stone countertop
k. Cabinet Hardware:
1) Selection by Owner

Division 7 - Thermal and Moisture Protection

1. SPRAY FOAM INSULATION:
a. Walls: to be R-19 closed cell foam insulation.
b. Roof: to be R-49 open cell foam insulation.
c. Floor: to be R-49 closed cell foam insulation.
2. VAPOR BARRIERS:
a. Provide 10 mil poly vapor barrier under all concrete slabs.
b. Install TUFF R Wall & Roof Underlayment (ASTM D226), Type II, s.o.w. at exterior wall.
c. At roof decks, set tile over deck & Water sheds high temperature, self-adhering, roofing underlayment.
3. FLASHING AND SEALANTS:
a. Composition flashing to be 6" or 12" (as space allows) 20 mil, pressure sensitive waterproofing tape, ISA 20 by Window Wrap or equal. Apply at 50°F or above.
b. Through-wall counter flashing and Oil Base flashing to match roof metal.
c. Self-adhering flexible flashing to head/sill/jamb at exterior window/door rough openings. Composite membrane to consist of 28 mil, rubberized asphalt laminated to 4 mil cross laminated high-density polyethylene film.
d. Install sheet metal at drains, flashings, gutters, etc. in accordance with SMACNA Sheet Metal Manual
e. Typical joint sealants: to be polyurethane non-sag gunnable elastomeric sealant complying with ASTM C920, Class 25, Single component to suit the application, color selected to match adjacent finishes.
f. Latex caulk at all dry joints.
g. Kitchen, Bath, & Wet Locations Sealants: are to be Silicone non-sag gunnable sealant complying with ASTM C920, Class 25 with mildew-cide.
h. For Joints Exposed to View, Unless Otherwise Indicated: Acrylic latex, water-based, single part, paintable sealant, white.
4. ROOFING:
a. STANDING SEAM METAL ROOF:
1) MU50 Roof Panel to be by Union Corrugating Company.
2) Panel with: 16"
3) Weight: 26 gauge
4) Color: T.B.D. - verify with Owner
5) Standard fasteners and trim color to match Roof metal.
6) Install to meet manufacturer requirements and building wind load requirements for this project.
7) Union Corrugating Company, Attn: Jerry Shirley, 912.412.0457
jshirley@unioncorrugating.com; www.unioncorrugating.com
b. Roof warranty: Provide MFG 25-year warranty against rupture or perforation or from structural failure due to wind speeds not exceeding design conditions. Provide 20-year warranty for finish against chipping, cracking, blistering, fading, chalking, and flaking. Provide installer written 10-year warranty from the date of acceptance guaranteeing materials and workmanship for weather tightness, weather tightness with applicable laws.

sealant over the joint and sealed into the compound. Sufficient compound shall remain under the tape to provide proper bond. A plain coat shall immediately follow tape embedment but not be functional as a fill or cement coat. Tape shall be properly folded and embedded in all angles to provide a true angle. The tape of entire joint coat shall be thoroughly dry prior to application of the fill coat.
e. Topping coat: a proper joint compound shall be applied over the sandwiching coat, filling the board taper flush with the surface. The fill coat shall cover the tape and feather out slightly beyond the tape. On joints with no taper, the fill coat shall cover the tape and feather out at least 4" on either side of the tape. Multi coats, as necessary on interior angles. The fill coat shall be thoroughly dry prior to application of the finish coat.
f. All nailer screw head dimples shall receive three coats. Allow each coat duration of compound to dry thoroughly before additional application of compound. Ridges of wallboard head shall be concealed with at least two coats of compound. The first coat shall be joint compound, and the second coat may be joint or topping compound feathered out 8" on both sides of the exposed metal nose.
g. All joints and corner beads shall be sanded after the final application of topping has thoroughly dried. Sand shall be executed so as not to roughen the adjoining wallboard surfaces. After all carpentry, tile and other trades have completed their work and prior to painting, the contractor shall point up all wallboard surfaces ready for painting.

3. SOLID WOOD STRIP & PLANK FLOORING:
a. Provide kiln-dried wood flooring. Submit samples for approval prior to ordering.
b. Species: Oak T&G
c. Grade: Select
d. Cut: Plain sawn
e. Thickness: 3/4 inch
f. Face Width: 2 3/4" inch
g. Matching: Tongue and groove, end end matched
h. Backs: Channeled (kerfed) for cross relief
i. Random lengths
j. Urethane Finish System: Complete system of compatible components that is recommended by finish manufacturer for the application indicated.
k. Field underlayment: ASTM D226, Type I, No. 15, asphalt saturated felt
l. Fasteners: As recommended by Manufacturer, but not less than that recommended in NOFMA's

4. CERAMIC / PORCELAIN TILE:
a. Wall Tile for Kitchen Backsplash: by Owner.
b. Wall Tile for Bath: Selection by Owner.
c. Floor Tile Bath: Semi-White Terrazzo Matt 24x24.
d. Over two layers of 1/2" plywood floor set with a Thin-set method in and in accordance with method F142-00, Tile Council of America, Inc.
e. Wall tile to be thin-set over backing board in accordance with method W244-93 by the Tile Council of America, Inc. Backing board and tape shall be high density, water resistant, glass fiber reinforced 1/2 thick and 2" wide opaque glass fiber tape for joints and corners by Dortek manufactured by US Gypsum Co.
f. Center tile in room as equal with the use of complete units, with no tiles less than 1/4 tile wide.
g. Caulk perimeter of plumbing fixtures at the wall or adjacent tile with sealant in accordance with requirements of Thermal and Moisture Protection Spec. Section
h. Tolerances: Plumb, level, and true to line within (+/-) 1/2" in any unshielded space and (+/-) 1/16" maximum in a running foot.

5. PAINTING:
a. Interior: Paint to be applied after all interior wood trim and walls have been thoroughly prepared, sanded and cleaned as required.
b. Interior Drywall: 1 coat Sherwin Williams Latex Drywall Primer and 2 coats Sherwin Williams Promar 200 Zero VOC Latex Eggshell Color by Owner
c. Interior: Wood Trim: 1 coat Sherwin Williams Premium Primer Latex primer and 2 coats Sherwin Williams Promar 200 Zero VOC Latex Semigloss, Color by Owner
d. Stain/Grain: Wood to receive stain, by Owner selection.
e. Exterior walls and trim to be thoroughly cleaned and prepared to receive new paint.
i. Exterior Finished Trim: Sherwin Williams Exterior oil-based (Oil) primer and Sherwin Williams A100 Latex top coat. Color by owner.
g. Exterior Painted Siding: 1 coat primer all surfaces prior to installation, 2 coats paint on all surfaces exterior paint.
h. Exterior Primer Every Pocket and Handrails: Sherwin Williams Exterior oil-based (Oil) primer and Sherwin Williams A100 Latex top coat. Color by owner.
i. Exterior Paint Every Pocket and Handrails: Sherwin Williams Exterior oil-based (Oil) primer and Sherwin Williams A100 Latex top coat. Color by owner.
k. PAINTING: Use Sherwin Williams Paint. For specific color, contact Joel Myers, Sherwin Williams Sales Representative, 843.224.3133.
a. Surface Preparation-NOTE: Lead containing paint (See attached EPA Report dated 1/22/13) at window floor to be chemically stripped and disposed of as per State and Federal Regulations.
1) Previously Coated Surfaces: Maintenance painting will frequently not permit or require complete removal of all old coatings prior to repainting. However, all coatings subject to peeling, blistering, flaking, loose paint, mildew, dirt, foreign matter, rust, mists, mill scale, material of incidental, and deleterious must be removed to assure sound bonding to the rigidly adhering old paint. Glossy surfaces of old paint likely must be dulled and sufficiently roughened to provide a tooth with an abrasive cleaner and detergent and then completely dry, wash thoroughly and dull by sanding. Spot prime any bare areas with compatible primer. Recognize that any complete preparation (part of total removal of the old coating) may compromise the service length of the system. Check for compatibility by applying a test patch of the recommended coating system, covering at least 12" by 12 square feet. Allow 16 days cure before testing adhesive per ASTM D3359. If the coating system is incompatible, complete removal is required.
2) Solvent Cleaning: Solvent cleaning is a method to remove oil, dirt, grease, road dressing and surface contaminants and other soluble substances. Solvent cleaning does not remove rust or mill scale. Change rags and cleaning solution frequently so that deposits of oil and grease are not spread over additional areas of the cleaning process. Be sure to allow adequate ventilation. For solvent cleaning, refer to Steel Structures Paint Council Surface Preparation Specification No. 1 (SSPC-SP1).
3) Hand Tool Cleaning: Hand Tool Cleaning removes loose rust, loose mill scale, and other detrimental foreign matter. It is not intended that adherent mill scale, rust, and paint be removed by this process. Mill scale, rust, and paint are considered adherent if they cannot be removed by lifting with a dull putty knife. Before hand tool cleaning, remove visible oil, grease, soluble residues, and salts by the methods outlined in SSPC-SP1. For complete instructions, refer to Steel Structures Paint Council Surface Preparation Specification No. 2 (SSPC-SP2).
4) Power Tool Cleaning: Power tool cleaning removes all visible oil, grease, soil, drawing and cutting compounds, and other visible contaminants. Solvent cleaning does not remove rust or mill scale. Change rags and cleaning solution frequently so that deposits of oil and grease are not spread over additional areas of the cleaning process. Be sure to allow adequate ventilation. For solvent cleaning, refer to Steel Structures Paint Council Surface Preparation Specification No. 1 (SSPC-SP1).
5) Hand Tool Cleaning: Hand Tool Cleaning removes loose rust, loose mill scale, and other detrimental foreign matter. It is not intended that adherent mill scale, rust, and paint be removed by this process. Mill scale, rust, and paint are considered adherent if they cannot be removed by lifting with a dull putty knife. Before hand tool cleaning, remove visible oil, grease, soluble residues, and salts by the methods outlined in SSPC-SP1. For complete instructions, refer to Steel Structures Paint Council Surface Preparation Specification No. 2 (SSPC-SP2).
6) Wood (Exterior): Must be cleaned dry. Prime and paint as soon as possible. Knots and pitch streaks must be scraped, sanded, and spot primed before a full priming coat is applied. Fill all nail holes and imperfections with wood filler or putty and sand smooth.
7) Weather - All materials are to be applied in accordance with the printed data given in regards to weather conditions. Experienced workmanship is the key to permit paint film be set up before condensation occurs. Apply in light temperature tinted colors. Do not begin painting until surfaces are moisture free.

Division 10 - Specialties

1. ARTIC STRIKE Fabrics: Mohawk Superior 3.0" wide x 54" Verify existing dimensions.

Division 11 - Equipment

1. WATER HEATER:
a. Rinnai Tankless: Water Heater: Model T.B.D.
2. EQUIPMENT: Installed by Owner (or owner owned) Installed by Contractor
a. Refrigerator
b. Range
c. Dishwasher
d. Freezer
e. Washer
f. Dryer

Division 12 - Furnishings

Not Used

Division 13 - Special Construction

1. POOL:
a. Pool w/ hidden pool cover construction by Pool Manufacturer.
b. Pool Manufacturer: By Contractor, Architect Approval. Owner rated for safety and security as per code.
c. All mechanical & electrical must be approved & installed to be code listed with local construction.
d. Provide shop drawings on pool and integral of hidden pool cover. Detailing of pool cover with surrounding pool finishes are to be coordinated and detailed prior to commencing construction. Approval by Architect.

Division 14 - Conveying Systems

Not Used

Division 15 - Mechanical

1. Per Mechanical Drawings
2. Building Services Piping: Visually inspect connections for leaks; all fixtures in domestic over entire duration of the following tests:
a. Domestic Water: Air pressure test (Shall maintain at 25 psi above system operating pressure for minimum of 1 hour.
b. Gravity Drainage Inside Building: Water pressure test, by filling with water and maintaining min. of 10 feet water head for 15 minutes. Air pressure test, by maintaining min. 5 psi air pressure using air compressor for min. of 15 minutes.
c. Gravity Drainage Outside Buildings: Water pressure test, before backfilling, by filling with water and maintaining min. of 10 feet water head until satisfactorily completed.
3. All plumbing supply pipe to be copper. Install cut off valves on supply lines at each fixture. Wrap hot water supply lines with min. 1" insulation.
4. All waste pipe from first floor to be cast iron approved PVC s.o.w. Min schedule 40.
5. Plumbing Fixtures: ea. Toilet, Lavatory, Faucets, Shower head, etc. to be selected by Owner (No Allowances) s.o.w. and installed by Contractor.
6. Contractor is to provide and install all work needed for fully operational plumbing system, based on fixtures and layout indicated on Drawings, including hot & cold water, sanitary drainage, and venting.
7. Contractor shall test all system to ensure quiet operation and minimize percentage from the pipework.
8. HVAC
a. HVAC to be 15 SEER System to meet the following minimum requirements:
b. Must perform to 75 deg. at 90 deg outside dry-bulb, 70 deg. at 20 deg. outside dry-bulb
9. Route ductwork in attic space, ceiling or exterior walls where possible to provide maximum accessible space for Owner or Run duct work under floor framing system above Base Flood Elevation.
10. Duct Insulation to be 2" 24# density duct wrap. Seal all joints with duct tape and mastic.
11. Install registers and grilles of materials & finishes suited to the mounting surface (ex. walls, ceilings etc.) (Note): Sizes to be determined by HVAC contractor.
12. Mechanical installation shall be in accordance with recommendation of ASHRAE and per the Equipment Mfr.
13. HVAC contractor to determine exact duct sizes, locations, and layouts for proper heating and cooling of the individual spaces. Provide Contractors Sheet to exterior of the building.
14. Provide equipment Operators Manual, installation instructions and Warranty to Owner prior to final completion.

Division 16 - Electrical

1. Per Electrical Drawings
2. Contractor to request temporary (1) UFPA 70-2020, National Electrical Code (NEC), and requirements of the local utility.
3. All equipment and materials shall bear the label of approval of the National Board of Fire Underwriters (NU) and shall be proper for their particular application.
4. Contractor shall lay out circuits in accordance with the best practices of the trade

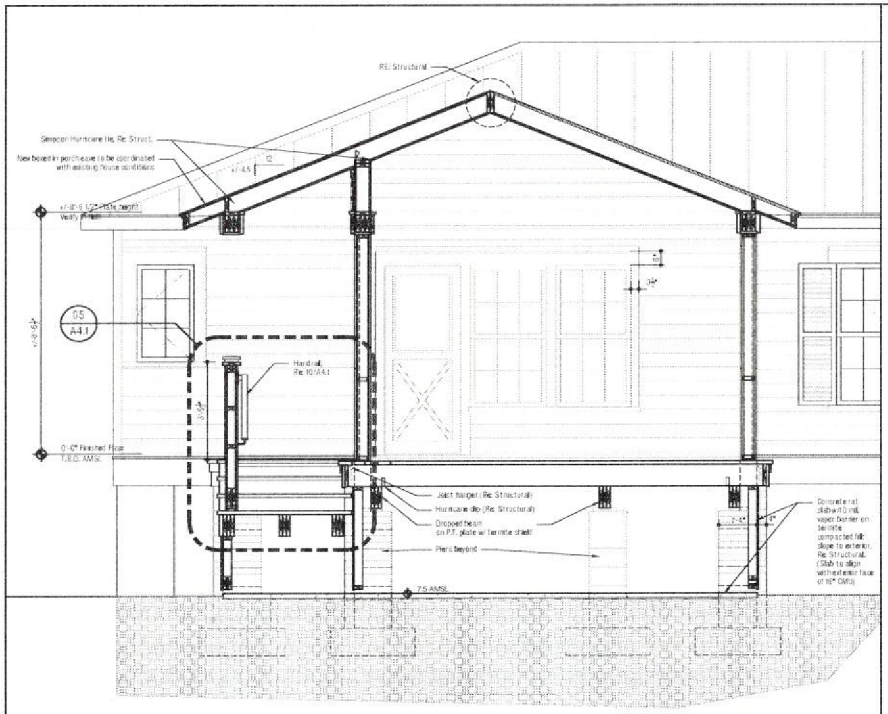

Section Through Screen Porch Facing West 1/2"=1'-0" | 11

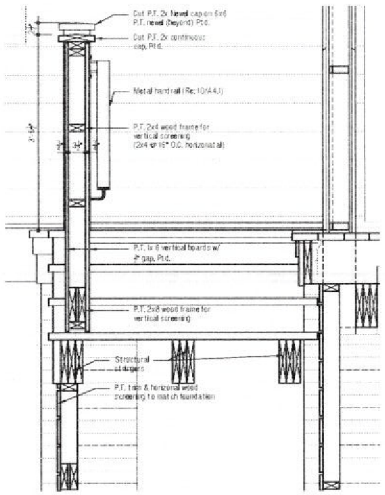

Exterior Vertical Stair Screen Detail 1"=1'-0" | 05

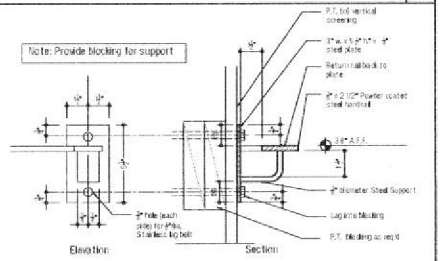

Exterior Metal Hand Rail Detail 1"=1'-0" | 10

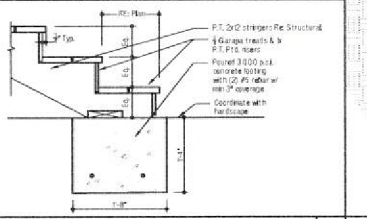

Exterior Stair Detail 1"=1'-0" | 09

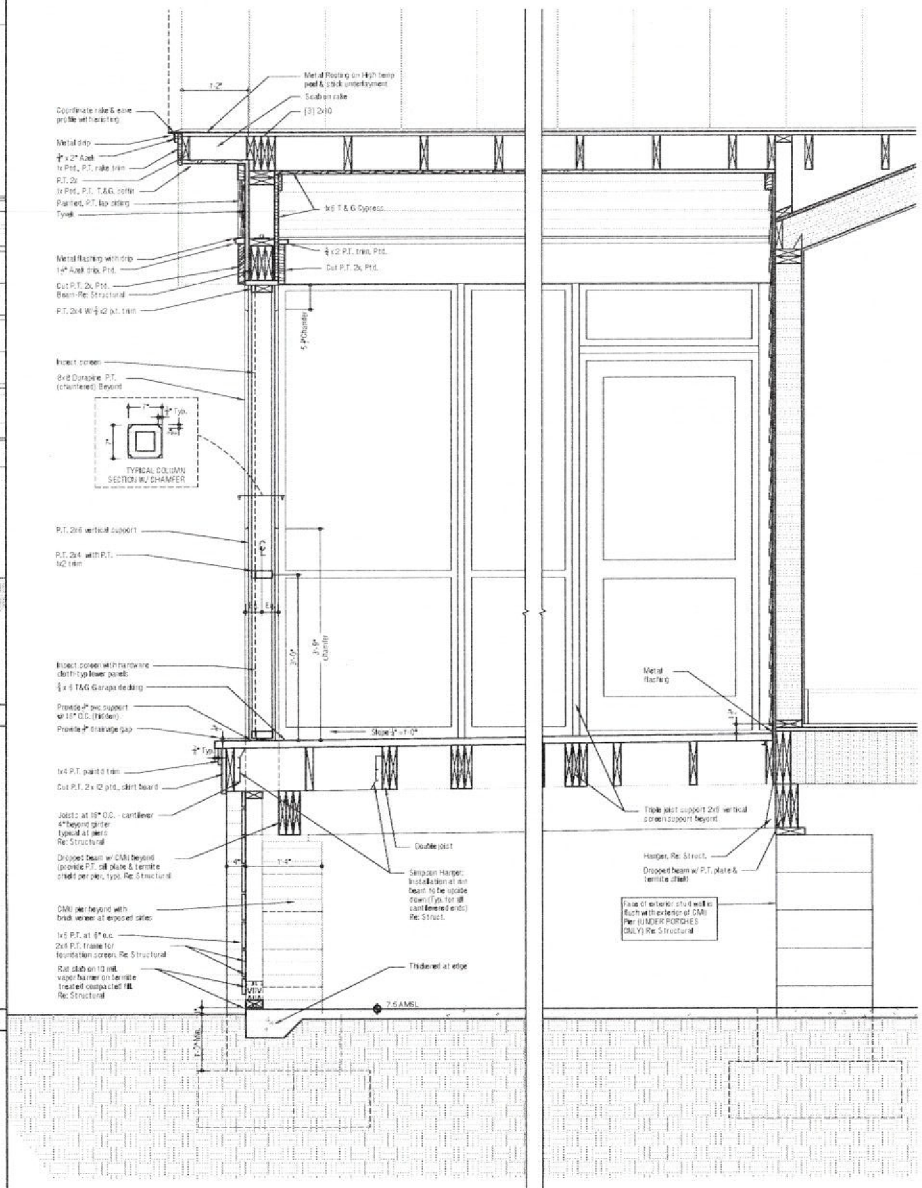

Typical Section Through Screened Porch 1"=1'-0" | 01

MONTGOMERY ARCHITECTURE & PLANNING, INC.
www.monarchpl.com
404 Ribaut Road
Beaufort, SC 29902
Phone: (843) 522-8077
Fax: (843) 522-8011

DATE ISSUE
2-13-20 Permit

Building Sections
Kennedy Cottage Renovation
504 Prince Street
Beaufort, South Carolina

A4.1

Project No: 346
Drawn By: AP
Checked By: PCM
© 2020 All Rights Reserved



MONTGOMERY ARCHITECTURE & PLANNING, INC.
www.monarchpl.com
404 Ribaut Road
Beaufort, SC 29902
Phone: (843) 522-8077
Fax: (843) 522-8011

DATE 2-17-20 ISSUE Permit

New Exterior & Interior Elevations
Kennedy Cottage Renovation
504 Prince Street
Beaufort, South Carolina

A3.1

Project No: 346
Drawn By: AF
Checked By: RCM
© 2020 All Rights Reserved

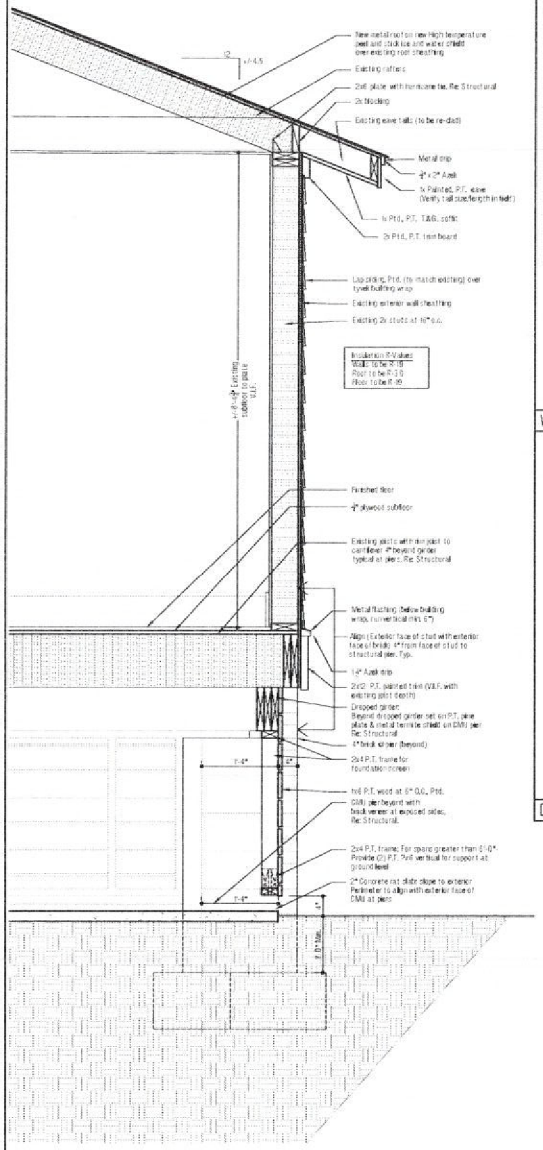

Typical Wall Section 1"=1'-0" 17

WINDOW SCHEDULE

(Existing windows to be reused) Note: Each window is noted individually. Contractor to confirm each size. Contractor to choose 10 existing windows and of 12 to re-use.

New Windows (NUMBER COUNT ON PLAN) Note: Each window is NOT noted individually.

Tag	Size (Existing sizes to be V.I.F.)	Type	Manufacturer	Notes
E-1	2'-7" x 6'-1"	Double Hung		To remain in existing location
E-2	2'-8" x 5'-1"	Double Hung		
E-3	2'-8" x 5'-1"	Double Hung		Verify on field each window size.
E-4	2'-8" x 5'-1"	Double Hung		
E-5	2'-8" x 5'-1"	Double Hung		
E-6	2'-8" x 5'-1"	Double Hung		
E-7	2'-8" x 5'-1"	Double Hung		
E-8	2'-8" x 5'-1"	Double Hung		
E-9	2'-8" x 5'-1"	Double Hung		
E-10	2'-8" x 5'-1"	Double Hung		
N-1	2'-0" x 3'-1"	Casement	T.B.D.	To match existing in material, muttons, etc., V.I.F. -1
N-2	1'-4" x 1'-8 1/2"	Fixed	Sapele	Side light (Tempered, coordinate size with existing front door) -To match existing in material, muttons, etc., V.I.F. -1

NOTES:
1. N-1 & N-2 New windows to have rated, Standard base pine exterior, (To be painted) Exterior color: T.B.D. Simulated divided lite with spacer bar (5 D/L) V.I.F. - Refer to elevations for patterns & opening. Hardware: Gliding to be Low Exposed screen. Hardware color: T.B.D.
2. Existing shutters to be re-used for hurricane protection.
3. Hardware selection by Owner.
4. Sapele by Willingham Sash and Door

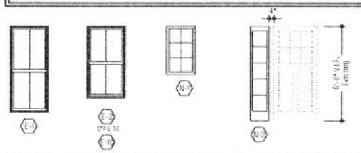

Window Schedule N/A 11

DOOR SCHEDULE

Tag	Size	Type	Elevation	Manuf.	Material	Notes
E-1	3'-0" x 8'-0" V.I.F.	Swing	A	Existing	Painted Wood	To be re-painted - Verify color in field
E-2	3'-0" x 8'-0" V.I.F.	Swing	B	Existing	Painted Wood	To be re-painted - Verify color in field
1	4'-0" x 8'-0"	French Swing	C	T.B.D.	Painted Wood	
2	2'-8" x 8'-0"	Swing	D	T.B.D.	Painted Wood	
3	7'-8" x 8'-0"	Swing	D	T.B.D.	Painted Wood	
4	2'-8" x 8'-0"	Swing	D	T.B.D.	Painted Wood	
5	7'-8" x 8'-0"	Swing	D	T.B.D.	Painted Wood	
6	4'-0" x 8'-0"	French Swing	D	T.B.D.	Painted Wood	
7	2'-8" x 8'-0"	Swing	D	T.B.D.	Painted Wood	
8	3'-0" x 8'-0"	Swing	D	T.B.D.	Painted Wood	

NOTE:
1. Hurricane protection to be plywood
2. Exterior doors to be painted wood, split wood, 1 3/4" thickness

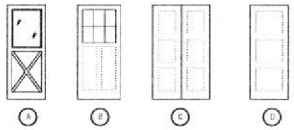

Door Schedule N/A 10

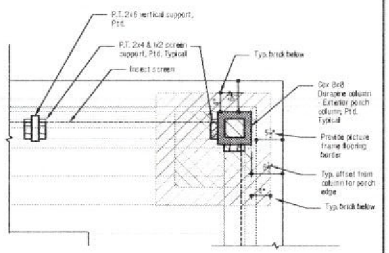

Screen Porch Enlarged Plan Detail 1"=1'-0" 09

ROOM FINISH SCHEDULE

ROOM NAME	FLOOR	BASE	TRIM	WALL	CEILING	CLG. HT.	NOTES
Entry Porch	5/4 x 6 T&G Garapa Unpainted	N/A	N/A	N/A	1x 6 T&G Cypress-Sealed	Cathedral	
Living Room	Wood	Wood Painted	Wood Painted	Gypsum bd., prtd.	Gypsum bd., prtd.	+/-8'-3"	
Kitchen	Wood	Wood Painted	Wood Painted	Gypsum bd., prtd.	Gypsum bd., prtd.	+/-8'-3"	
Laundry	Wood	Wood Painted	Wood Painted	Gypsum bd., prtd.	Gypsum bd., prtd.	+/-8'-3"	
Bedroom #1	Wood	Wood Painted	Wood Painted	Gypsum bd., prtd.	Gypsum bd., prtd.	+/-8'-3"	
Bath	Tile	Wood Painted	Wood Painted	Gypsum bd., prtd.	Gypsum bd., prtd.	+/-8'-3"	
Bedroom #2	Wood	Wood Painted	Wood Painted	Gypsum bd., prtd.	Gypsum bd., prtd.	+/-8'-3"	
Screen Porch	5/4 x 6 T&G Garapa Unpainted	N/A	N/A	N/A	1x 6 T&G Cypress-Sealed	Cathedral	

NOTES:
1. Finishes to be coordinated with Owner.

Room Finish Schedule 04

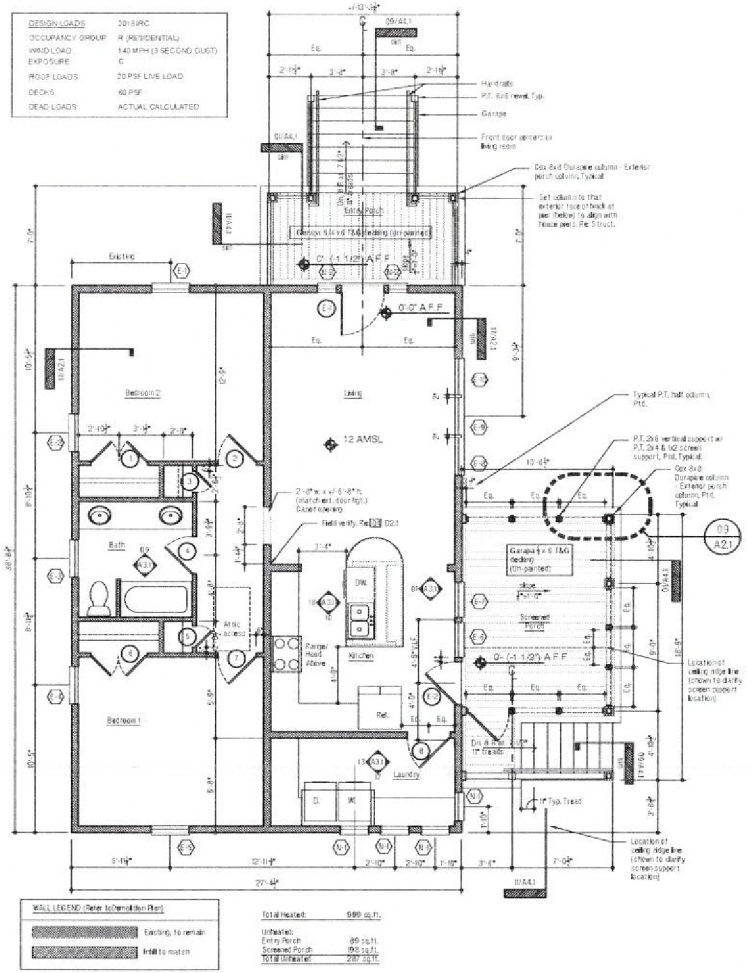

New Plan 1/4"=1'-0" 01

MONTGOMERY ARCHITECTURE & PLANNING, INC.
www.monarchpl.com
404 Ribaut Road
Beaufort, SC 29902
Phone: (843) 522-6077
Fax: (843) 522-6011

DATE	ISSUE
2-17-20	Permit

New Plan, Typical Wall Section & Schedules
Kennedy Cottage Renovation
504 Prince Street
Beaufort, South Carolina

A2.1

Project No: 346
Drawn By: AF
Checked By: RCM
© 2020 All Rights Reserved

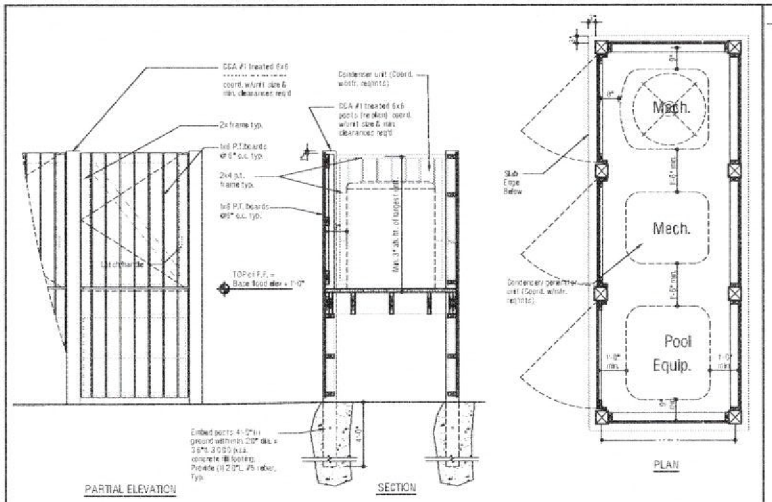

Pool & Mechanical Equipment Screening 1/2"=1'-0" | 20

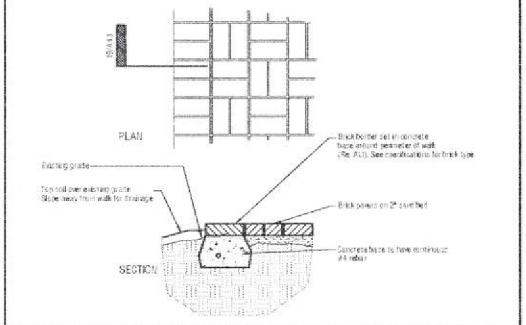

Brick Terrace Detail 1/4"=1'-0" | 19

POOL & MECHANICAL ENCLOSURE

OVERALL SIZE OF PLATFORM AND HEIGHTS TO BE COORDINATED WITH MECHANICAL & POOL UNIT SIZES AND MANUFACTURER'S REQUIRED CLEARANCES. SITE PLACEMENT AND SIZES TO BE CONFIRMED WITH ARCHITECT PRIOR TO CONSTRUCTION

POOL & MECHANICAL CLEARANCES

NOTE: CLEARANCES NOTED AROUND MECHANICAL AND POOL UNITS ARE TO BE CONFIRMED WITH MANUFACTURER AND CODE REQUIREMENTS

Notes 18

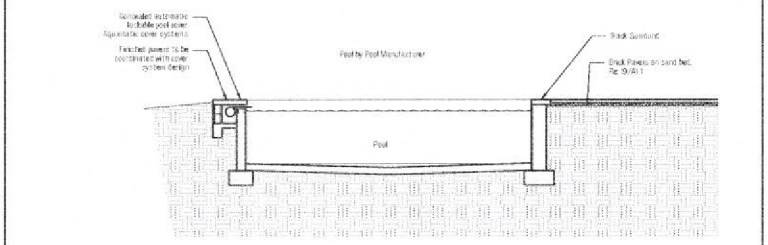

Pool 1/4"=1'-0" | 17

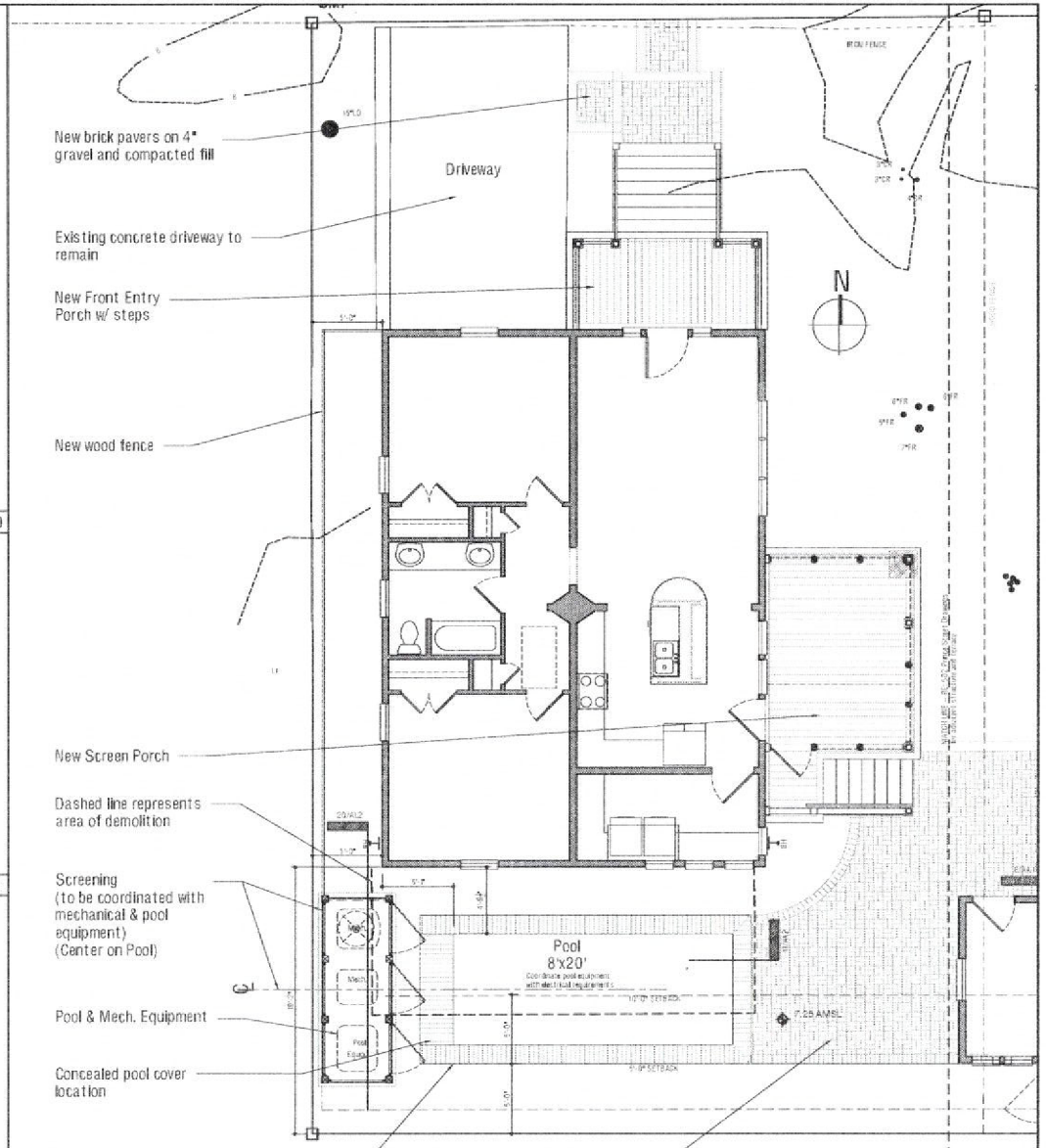

New Site Plan 1/4"=1'-0" | 01

MONTGOMERY ARCHITECTURE & PLANNING, INC.
www.monarchpl.com
404 Ribaut Road
Beaufort, SC 29902
Phone: (843) 522-6077
Fax: (843) 522-9011

DATE ISSUE
2-17-20 Permit

New Site Plan & Exterior Details
Kennedy Cottage Renovation
504 Prince Street
Beaufort, South Carolina

A1.1

Project No. 346
Drawn By AP
Checked By RCM

© 2020 All Rights Reserved

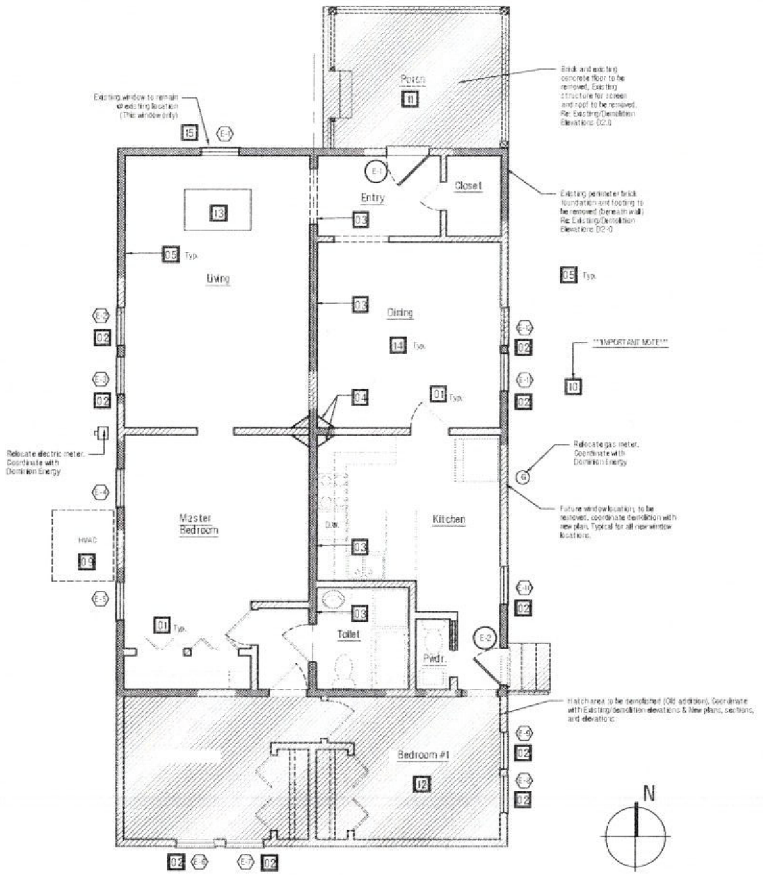

Existing / Demolition Plan 1/4"=1'-0" | 13

DEMOLITION LEGEND (Refer to Demo. Schedules for Exterior Windows & Doors)

- To be removed
- To be removed
- To remain

01 All interior doors are to be permanently removed.

02 Exterior window to be carefully removed and stored for future re-use. Existing shutters and hardware to be salvaged and reinstalled for operation

03 Bearing wall to remain.

04 Contractor to verify existing conditions and potential removal of angled bump out, notify Architect of existing conditions.

05 All interior drywall to be removed.

06 Siding to be removed where necessary for new construction

07 All existing roof asphalt shingles and roofing membrane to be removed. Prep for new metal roof and ice and water shield.

08 All existing shutters are to be carefully removed and stored for future use.

09 Existing HVAC to be removed.

10 House to be lifted. Existing house to be lifted. Notify Architect of existing floor joist structure & layout. To be coordinated with new plan & structural drawings. Existing brick foundation to be removed.

11 Front screened in porch to be demolished, refer to demolition elevations and plan. Removal of brick foundation, concrete floor, wall / screen and associated roof structure.

12 Back area 'old existing addition' to be demolished, refer to demolition elevations and plan. Removal of brick foundation, associated structural walls and associated roof structure.

13 All existing interior insulation be removed.

14 All existing flooring to be removed.

15 Window to remain

EXTERIOR DEMOLITION DOOR LEGEND

E-# Door to be re-used: Re: Door Schedule 10/A2.1

DEMOLITION WINDOW SCHEDULE

E-# Window to be re-used: Re: New Plan 01/A2.1 & Window Schedule 10/A2.1

All windows, except for North window in Existing Living Room, are to be carefully removed and stored for future re-use. Contractor to confirm quantity of windows which are in working order with Architect.

DEMOLITION NOTES

1. Coordinate removal/demolition with existing/demolition elevations and new renovated plans and elevations for new porch additions: Plan, elevations, and details. Full extent of demolition should be verified in the field prior to start of construction. Any conflicts are to be verified with the Architect prior to commencing construction.
2. All demolition work shall be done so as not to disturb existing construction to remain.
3. All remaining construction is to be adequately braced to prevent overturning or collapse. Bracing shall remain in place until permanent supporting elements of the structure are in place.
4. Inspect all existing structure and finish materials for weather and insect damage. Structural elements are to be replaced as required. Damaged finish materials should be removed prior to proceeding.
5. Remove all associated plumbing which are to be abandoned.
6. Remove all associated utilities which are to be abandoned.
7. Carefully remove windows and doors as indicated. All windows and doors which are to be kept and re-used are to be stored in a safe & clean manner. Re: Demolition Legend and Exterior Window and Door Schedules.
8. Items which are to be permanently removed are to be donated, recycled, or retained at the Approval of the Owner.

Demolition Notes and Schedules N/A | 05

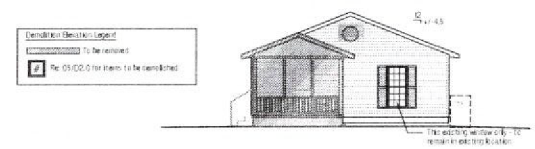

Existing/Demolition North Elevation 1/8"=1'-0" | 04

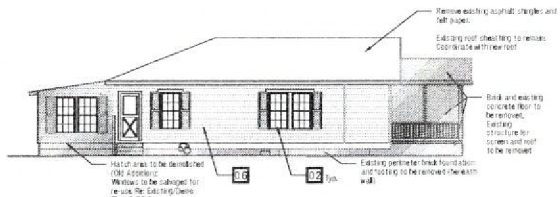

Existing/Demolition East Elevation 1/8"=1'-0" | 03

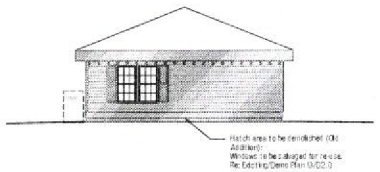

Existing/Demolition South Elevation 1/8"=1'-0" | 02

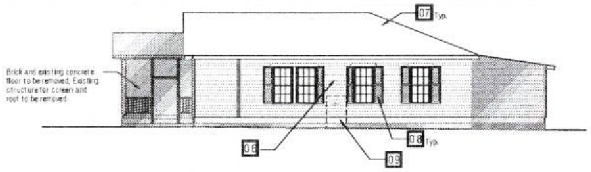

Existing/Demolition West Elevation 1/8"=1'-0" | 01

MONTGOMERY ARCHITECTURE & PLANNING, INC.
www.monarchpl.com

404 Ribaut Road
Beaufort, SC 29902
Phone: (843) 522-8077
Fax: (843) 522-8011

DATE 2-17-20 ISSUE Permit

Demolition Plan & Elevations
Kennedy Cottage Renovation
504 Prince Street
Beaufort, South Carolina

D2.1

Project No: 346
Drawn By: AF
Checked By: RCM
© 2020 All Rights Reserved

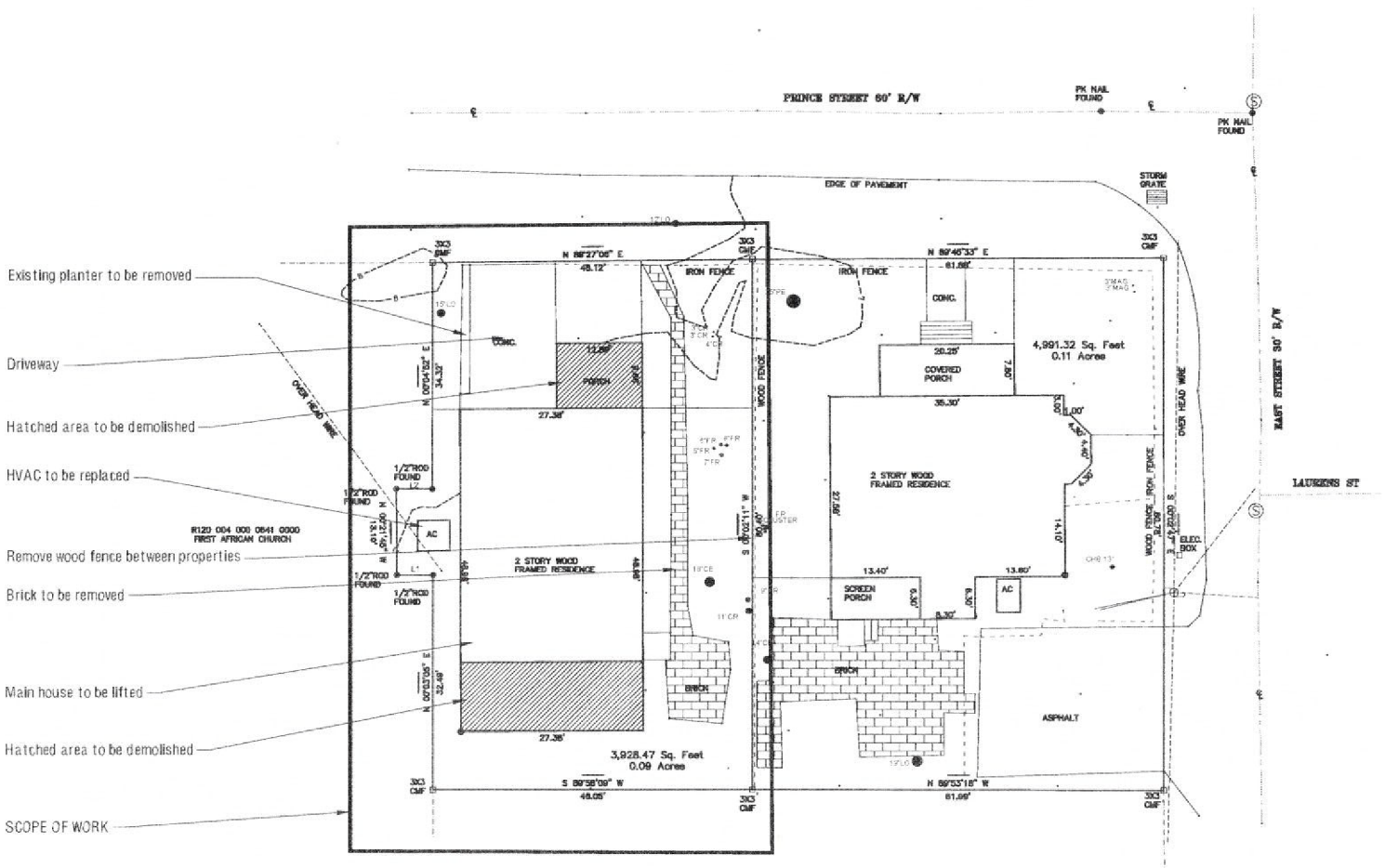

MONTGOMERY ARCHITECTURE & PLANNING, INC.
www.monarchpl.com

404 Ribaut Road
Beaufort, SC 29902
Phone: (843) 522-6077
Fax: (843) 522-8011

DATE ISSUE
2.13.20 Permit

Existing Site with Demolition Notes
Kennedy Cottage Renovation
504 Prince Street
Beaufort, South Carolina

D1.1

Project No. 346
Drawn by AP
Checked By RCM
© 2020 All Rights Reserved

Existing Site Plan with Demolition Notes 1/8"=1'-0" 01

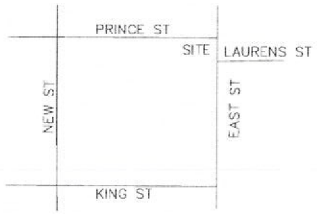

LOCATION MAP (N.T.S.)

LEGEND OF SYMBOLS & ABBREVIATIONS

FIRE HYDRANT
CLEAN OUT
POWER POLE
TELEPHONE PEDESTAL
FIBER OPTIC STUB
WATER VALVE
GAS VALVE
WATER METER
1/2"ROD SET
TREE SIZE & TYPE
ELEVATION
MAIN VALVE MONUMENT
MANHOLE
GUY WIRE
CABLE BOX
OVERHEAD POWERLINE
EDGE OF PAVEMENT
BACK OF CURB
LIGHTPOLE
GAS LINE
CENTER LINE
CONTOUR LINE

GASQUE & ASSOCIATES, INC. SOUTH CAROLINA CERTIFICATE OF AUTHORIZATION

TREE LEGEND

CODE	COMMON NAME	BOTANICAL NAME
PND	PINE, SHORTLEAF	Pinus echinata
PNL	PINE, LONGLEAF	Pinus palustris
LO	LIVE OAK	Quercus virginiana
O	OAK	Quercus spp.
MAG	SOUTHERN MAGNOLIA	Magnolia grandiflora
PA	PALMETTO	Sabal palmetto
BLD	BLUEBERRY	Delile hastigata
SL	GUM	Nyssa spp.
M	MOCKERNUT HICKORY	Carya spp.
BAY	BAY MAGNOLIA	Symbolos spp.
WI	WILD WYETILL	Myrica cerifera
CH	BLACK CHERRY	Prunus spp.
CE	EASTERN RED CEDAR	Juniperus virginiana
TA	CHINESE TALLOW-TREE	Triadica sebifera
PO	YELLOW POPLAR	Liriodendron tulipifera
R	BIRCH	Betula spp.
CY	BALD CYPRESS	Taxodium distichum
SY	AMERICAN SYCAMORE	Platanus occidentalis
PE	PECAN	Carya illinoensis
CR	CRAPE MYRTLE	Lagerstroemia indica
PS	PEAR TREE	
MP	MAPLE	Acer spp.
RW	REDWOOD	Sequoia Sempervirens
GM	GINKO TOUM	Ginkgo biloba
WO	WATER OAK	Quercus nigra
LA	LAUREL OAK	Quercus laurifolia
TU	TULIP TREE	Liriodendron
BJO	BLACKJACK OAK	Quercus marilandica
MM	MAGNOLIA	
CRA	CRAB APPLE	Malus sylvestris
MU	MULBERRY	Morus
MN	NANKIN TREE	Albizia julibrissin
WHO	WHITE OAK	Quercus alba
YO	YUNNEY OAK	Quercus cerris
RO	RED OAK	Quercus rubra
HOL	HOLLY	Aquifoliaceae
YE	YELLOW TREE	Tecta alba
TJ	TUPELO	Nyssa ponticariana
CRB	CRABAPPLE	Malus coronaria
DW	DOGWOOD	Populus
CL	CHERRY LAUREL	Prunus laurocerasus

ALL TREES ARE LOCATED TO THE FACE OF THE TREE TRUNK, DIAMETERS (D.B.H.) OF THE TREE LOCATED ON THE SURVEY ARE MEASURED AT 4.5' ABOVE THE GROUND LEVEL. TREES ARE MEASURED AT DBH (BREAST HEIGHT) IS APPROXIMATELY 4.5 INCHES ABOVE GROUND. BECAUSE ELEVATION AT TREE LOCATIONS MAY OR MAY NOT ACCURATELY REPRESENT ELEVATIONS BETWEEN TREE LOCATIONS, THE TREE LOCATIONS MAY NOT ACCURATELY REPRESENT ELEVATIONS BETWEEN TREE LOCATIONS. THE TREE LOCATIONS ARE "PROPERTY" TREE LOCATION THAT IS CRITICAL BEYOND THE TOLERANCE STATED ABOVE FOR DESIGN MUST BE FORMED OUT AND A TIGHTER TOLERANCE MUST BE AGREED UPON.

NOTES:

1.) THE BEARINGS SHOWN HEREON ARE MAGNETIC AND AS SUCH ARE SUBJECT TO LOCAL ATTRACTION.
2.) THIS PLAT DOES NOT CERTIFY THE PRESENCE OR ABSENCE OF U.S. ARMY CORPS OF ENGINEERS JURISDICTIONAL WETLANDS.
3.) METHOD OF AREA CALCULATION BASED ON COORDINATE METHOD.
4.) LOCATION OF UNDERGROUND UTILITIES ARE FROM SURFACE INDICATIONS ONLY AND ARE NOT CERTIFIABLE.
5.) THIS PLAT REPRESENTS A SURVEY BASED ON THE LISTED REFERENCES ONLY AND IS NOT THE RESULT OF A TITLE SEARCH.
6.) CERTIFICATIONS ARE NOT TRANSFERABLE TO ADDITIONAL INSTITUTIONS OR SUBSEQUENT OWNERS.
7.) THE CERTIFIER HAS NOT INVESTIGATED OR BEEN INSTRUCTED TO INVESTIGATE THE EXISTENCE OR NONEXISTENCE OF ANY OVERLAY DISTRICTS, SUCH AS; AIRPORT, MILITARY, NOISE, CRASH POTENTIAL OR ENVIRONMENTAL ISSUES.
8.) BEFORE ANY DESIGN WORK OR CONSTRUCTION ON THIS SITE IS STARTED FLOOD ZONE INFORMATION MUST BE VERIFIED BY PROPER BUILDING CODES OFFICIAL.
9.) SETBACKS SHOWN AS PER PLAT OF RECORD AND MUST BE VERIFIED WITH OFFICIAL AGENCY BEFORE PURCHASE AND OR CONSTRUCTION ON SUBJECT PROPERTY.

10.) THIS PROPERTY APPEARS TO LIE IN FLOOD ZONE A11 EL 13.00' AS DETERMINED BY F.E.M.A. FIRM COMM-PANEL NUMBER 450026 0005 D. DATED 09/29/86

11.) CONTOUR INTERVAL IS 1'.
12.) VERTICAL DATUM IS 1929 NGVD.

REFERENCES:

1.) T.M.S. R120 004 000 0642, & 0643
2.) PLAT BY DAVID S. YOUMANS
DATED 9/10/18
BOOK 3700, PAGE 2786
BEAUFORT COUNTY R.M.C. OFFICE
3.) PLAT BY DAVID S. YOUMANS
DATED 6/14/95
PLAT BOOK 55, PAGE 57
BEAUFORT COUNTY R.M.C. OFFICE

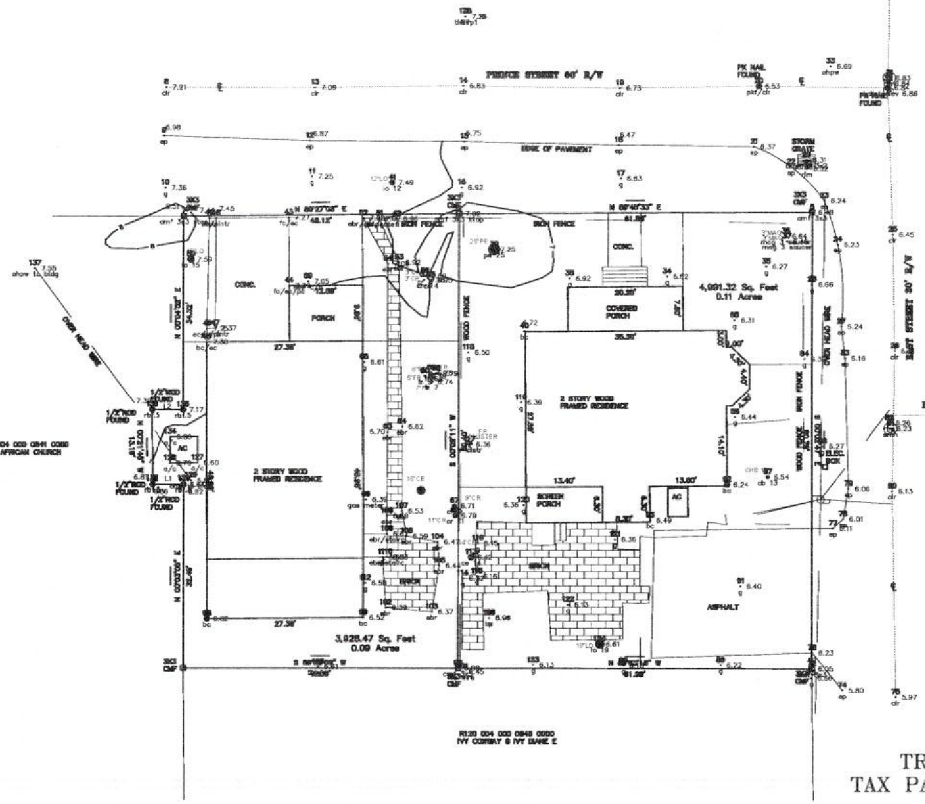



ASBUILT SURVEY AND TREE AND TOPOGRAPHICAL SURVEY TAX PARCELS R120 004 0000 0642 & 0643

PREPARED FOR

MICHAEL FRANCIS KENNEDY AND CYNTHIA NELSON KENNEDY

CITY OF BEAUFORT

BEAUFORT COUNTY SOUTH CAROLINA

DATE 8/21/2019 SCALE 1"=10'

GASQUE & ASSOCIATES INC.
LAND SURVEYORS · PLANNERS
28 PROFESSIONAL VILLAGE CIRCLE, BEAUFORT, S.C.
P.O. BOX 1383, BEAUFORT, S.C.
(843) 522-1798

THIS PLAT IS COPYRIGHTED AND IS ONLY INTENDED FOR THE USE OF THE ENTITY OR PERSON(S) SHOWN HERE ON.

I, David E. Gasque, a Registered Professional Land Surveyor in the State of South Carolina, certify to client(s) shown hereon that to the best of my knowledge, information and belief, the survey shown hereon was made in accordance with the requirements of the minimum standards manual for the practice of land surveying in South Carolina, and meets or exceeds the requirements for a CLASS survey as specified therein; also there are no encroachments or projections other than shown. This survey is not valid unless it bears the original signature and has its embossed seal.

David E. Gasque, R.L.S.
S.C. Registration Number 10203

LINE	BEARING	DISTANCE
L1	S 89°54'11" E	5.56'
L2	S 89°30'43" E	5.43'

10 5 0 10 20 30

JOB#51195 F.B.#1015/25 DRAWN BY?



Kennedy Cottage Renovation
Beaufort, South Carolina

ABBREVIATIONS

SYMBOLS

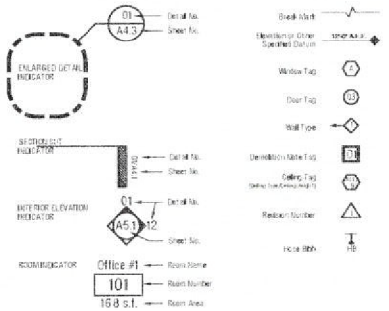

CODE ANALYSIS

CODE: 2018 International Residential Code

SQUARE FOOTAGE:

Heated and Cooled:

Ground Floor	999 sf
Total:	999 sf

Covered Porches:

Entry Porch	89 sf
Screened Porch	198 sf
Total:	287 sf

Terraces and Pool (604 only) 522 sf

As per Beaufort City Building Codes, historic structures are not required to be brought to full code. Finish floor elevation to be 12.6' AMSL. Hurricane strapping and ties as shown on S-drawings will be installed to the greatest extent feasible.

INDEX OF DRAWINGS

Sheet List Table

Sheet Number	Sheet Title
T1.1	Title Sheet
--	Survey
D1.1	Existing Site with Demolition Notes
D2.1	Demolition Plan & Elevations
A1.1	New Site Plan & Exterior Details
A2.1	New Plan, Typical Wall Section & Schedules
A3.1	New Exterior & Interior Elevations
A4.1	Building Sections
I1.1	Specifications
ME.1	Schematic Mechanical and Electrical Plans
S0.01	Structural - General Notes
S1.01	Structural - Foundation and Framing Plans
S1.02	Structural - Wall and Roof Framing Plans
S2.01	Structural - Typical Details
S3.01	Structural - Sections and Details

MATERIALS

KEY PLAN

GENERAL NOTES

TAX MAP NO: R120 004 0000 0642 & 0643

ZONING:

SURVEY: All site information contained here-in is based on: ASBUILT SURVEY AND TREE AND TOPOGRAPHICAL SURVEY

Prepared for: Michael Francis Kennedy and Cynthia Nelson Kennedy, City of Beaufort, Beaufort County, South Carolina

Prepared by: Gasque & Associates Inc. David E. Gasque RLS #10506, Job #51135, dated 8/21/2019

FLOOD ZONE: Refer to Survey for Flood Zone determination

HISTORIC REVIEW BOARD: Certificate Of Appropriateness #19-26 HRB 1 dated 11.13.2019 (demolition of existing rear addition, lifting building, renovation of home, screen porch, new pool and patio, and installation of new fencing).
Certificate of Appropriateness #19-26 HRB 2 dated 12.11.2019 (removal of existing addition).

MONTGOMERY ARCHITECTURE & PLANNING, INC.
www.monarchpl.com
404 Ribaut Road
Beaufort, SC 29902
Phone: (843) 522-8077
Fax: (843) 522-8011

DATE: ISSUE:
2.19.20 Permit

Title Sheet
Kennedy Cottage Renovation
504 Prince Street
Beaufort, South Carolina

T1.1

Project No. 340
Drawn by: AP
Checked By: RCM

© 2020 All Rights Reserved

GHD
57-C Sheridan Park Circle • Bluffton, SC 29910
Phone (843) 815-5120 • Fax (843) 815-5121

FIELD DENSITY WORKSHEET (PRELIMINARY)

Project Name: _____ Client: SINGLETON CONCRETE Date: 7-21-20

Project No.: _____ Contractor: _____ Technician: DT

Test No.	Location	Depth /Elev.	Total Sample Wts.	Wet Wt. Soil	Wet Wt. PCF	% Moist	Dry Wt. PCF	Proctor	Opt. Moist.	% Compaction	% Req'd	Pass /Fail
	N footprint	8" footing			105.8	10.1	96.1	100.7	13.2	95	95	P
	E footprint	5/6			103.6	8.3	95.7			95		P
	S footprint				103.3	8.6	95.3			95		P
	W footprint				103.6	9.1	96.8			96		P
	center footing				104.9	8.8	96.4			96		P
											PASS	

504 PRINCE STREET
CITY OF BEAUFORT # 200371

Mold Weight / Volume Factor: _____ / _____

Elevation Referenced To: ___ + From Top of Pipe ___ F/G = Finished Grade
___ - From Finished Grade ___ S/G = Subgrade
___ Other _____

Test Locations Established By ___ Contractor ___ Technician ___ Survey ___ Estimation

Elevation Established By ___ Survey ___ Estimation

Copies To: _____

GHD

504 Prince 50 of 54

City of Beaufort Building Inspection Report

PHONE # 843-592-1724 www.cityofbeaufort.org

This inspection does not relieve the owner, architect, engineer or contractor of any liability to construct the project to the adopted plans, specifications or building code(s)

Project:	**Date:** 9/9/20
Agency/ Contractor: Sutton	**Permit #** 200371
Address: 504 PRINCE ST	
Inspector: Bob Williams	
Results: PARTIAL PASS ~~PASS~~ FAIL	

Items Inspected:

Piers

Violations:

N/A

Comments:

City of Beaufort Building Inspection Report

PHONE # 843-592-1724 www.cityofbeaufort.org

This inspection does not relieve the owner, architect, engineer or contractor of any liability to construct the project to the adopted plans, specifications or building code(s)

Project:	**Date:** 8/21/20
Agency/ Contractor: Sutton	**Permit #** 20037
Address: 504 PRINCE ST	
Inspector: Bob Williams	

Results: PARTIAL PASS PASS FAIL

Items Inspected:

Porch Footer

Violations:

Comments:

Historic Review Board Meeting Staff Report

From the Department of Community and Economic Development
10 August 2022

1 Summary of Request

504 Prince Street, Alterations
The applicant is requesting final approval for alterations to a single-family residence at 504 Prince Street.

This property is in the Historic Preservation Neighborhood.

Background: This project was received final approval by the Historic Review Board in November 2019 to demolish an existing rear addition, lift the building above the flood elevation and renovate the house to include a screened porch, construct a swimming pool and patio, and install new fencing.

2 Facts

Property Address:	504 Prince Street
Parcel ID:	R120 004 000 0642 0000
Case Number:	22-50 HRB.1
Applicant:	**Michael and Cindy Kennedy, Homeowners**
Zoning:	T4-HN
Use:	Single Family Dwelling

District Development Standards for T4-HN:

- **Setback requirements – Primary Structure:**
  - *Front —Average prevailing setback on block*
  - *Rear setback – 15' min. h*
  - *Side Corner/Alley – 5'min.*
  - *Side Interior – 6'min., 10' min. in The Point*
- **Lot Width at Front Setback:** 40' min., 60' min. in The Point
- **Lot Size:** 4,000 sf min., 6,000 sf min. in The Point
- **Impervious Surface Coverage***:* 55% maximum for rooftops, additional 10% allowed for total impervious coverage.
- **Frontage Build-Out:** 75% max.
- **Maximum Building Height:** 3 stories max.

References:

Beaufort Code
Beaufort Preservation Manual
Beaufort Preservation Manual Supplement

Secretary of the Interior's Standards for Treatment of Historic Properties

3 STAFF COMMENTS

Staff Acknowledgements

- 504 Prince Street is listed on the National Register of Historic Places List of Contributing Resources and was built in 1945, it's listed as a "1-story frame dwelling; altered." This property was bought by the applicants and was merged with 502 Prince Street to the east into one property.

- As stated in the project background, this project received final approval in November 2019.

- In June 2022, the original permit holder, Sutton Construction Co., wrote a letter to the City of Beaufort Chief Building Official to request the permits be re-assigned to the owner of the property, stating that "this project is an accessory building that was partially completed with several inspections completed including foundation and some framing. This home was lifted out of the flood zone and currently sits ready to be finished."

- Current photographs show that the raised foundation was completed, a new east-facing porch was added, the north-facing, primary façade porch was removed and rebuilt, and new stairs were added at both porches. The rear rooms have been demolished and the east and south façades lack siding, and the studs are exposed. The 12x20 workshop/garage structure has been constructed. The pool has not been added.

Staff Conditions

1. Staff supports the continuation of this project and the construction of a new pool as it will be largely screened from view. However, the applicant needs to confirm that the pool will not encroach into the 5' required side setback as stated in Section 2.4.1.C.

2. Applicant to restudy the placement of the fenced-in equipment area in the southwest corner as it encroaches beyond the minimum 5' setback per Section 2.4.1.C.

STAFF RECOMMENDATION:

Final approval with conditions noted.

CITY STAFF INTRODUCTION

607 King Street

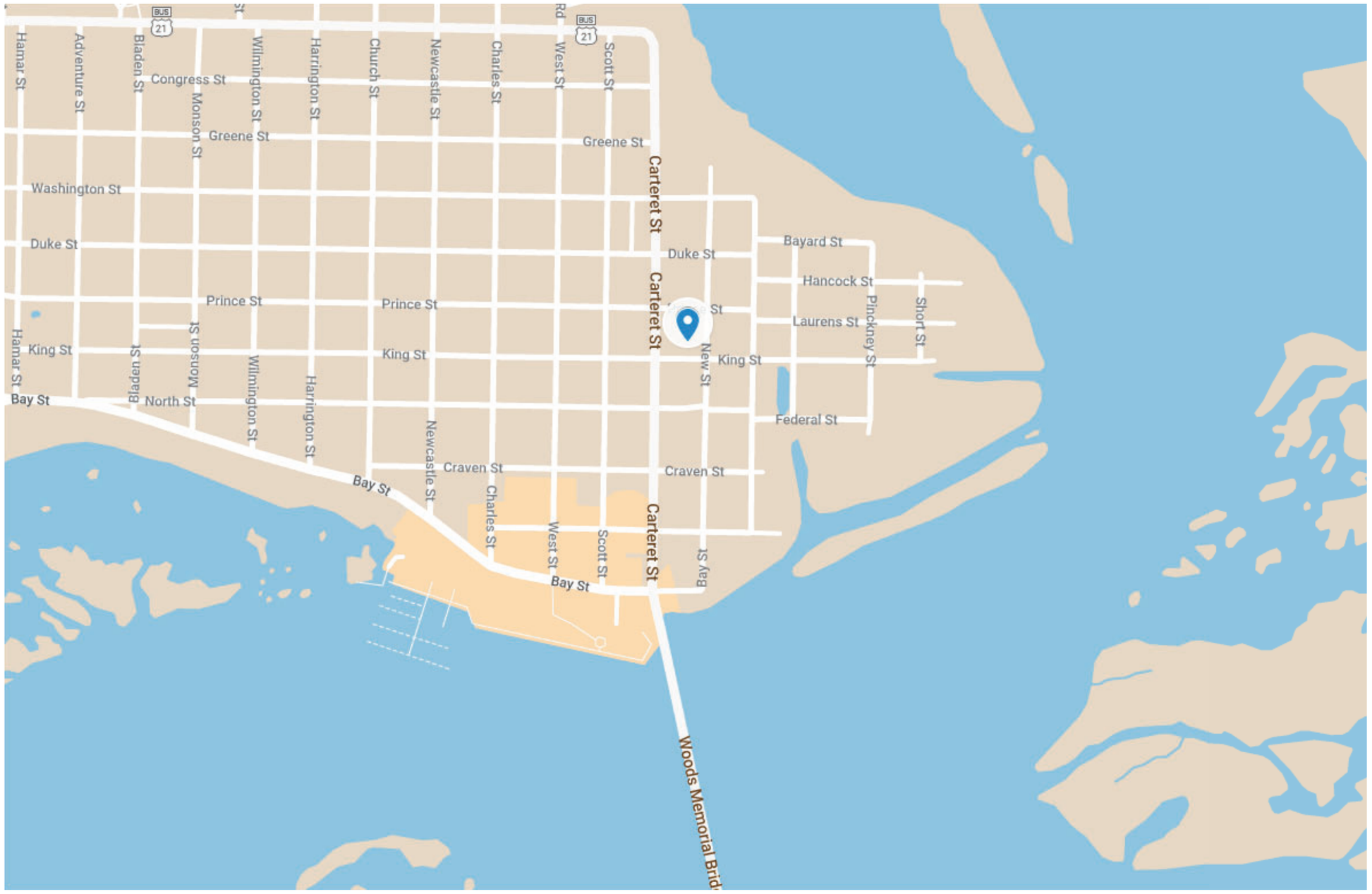
Hamar St
Adventure St
Bladen St
Monson St
Wilmington St
Harrington St
Church St
Newcastle St
Charles St
West St
Scott St
Carteret St
New St
Congress St
Greene St
Washington St
Duke St
Prince St
King St
Bay St
North St
Craven St
Bayard St
Hancock St
Laurens St
Pinckney St
Short St
Federal St
BUS 21
Woods Memorial Bridge



607 King 3 of 31



607 King 4 of 31



607 King 5 of 31



607 King 6 of 31

APPLICANT PRESENTATION

607 King Street

0

22-MHRB.2

DEVELOPMENT REVIEW PROCESS
HISTORIC REVIEW BOARD APPLICATION
Community & Economic Development Department
1911 Boundary Street, Beaufort, South Carolina, 29902
p. (843) 525-7011 / f. (843) 986-5606
www.cityofbeaufort.org

☐ Staff Review
☒ Board Review pd already

Application Fee:
see attached schedule

OFFICE USE ONLY: **Date Filed:** 7/13 **Application #:** 24021 **Zoning District:** T4-N
BCAGHS Survey: ☐ Yes ☐ No

Schedule: The Historic Review Board (HRB) typically meets the 2nd Wednesday of each month at 2pm. The complete schedule, along with the list of deadlines, may be found here - http://www.cityofbeaufort.org/historic-review-board.aspx

Submittal Requirements: All forms and information shall be submitted digitally. In addition to a complete application form, applicants shall submit the required items according to the checklists on the subsequent page.

Review Request: ☐ Conceptual ☒ Preliminary ☐ Final ☐ Bailey Bill Approval* ☐ Change After Certification
**Requires a Bailey Bill – Part A Preliminary Review Application Form*

Pursuant to Section 6-29-1145 of the South Carolina Code of Laws, is this tract or parcel restricted by any recorded covenant that is contrary to, conflicts with, or prohibits the activity described in this application? ☐ Yes ☒ No

Applicant, Property, and Project Information

Applicant Name: Bill Allison; Allison Ramsey Architects

Applicant Address: 1003 Charles St

Applicant E-mail: wallison@allisonramseyarchitect.co Applicant Phone Number: 843-986-0559

Applicant Title: ☐ Homeowner ☐ Tenant ☒ Architect ☐ Engineer ☐ Developer

Owner (if other than the Applicant): Bill & Janny DeLoache

Owner Address: 217 Cottage Place, Charlotte, NC 28207

Project Name: DeLoache Residence

Property Address: 607 King St

Property Identification Number *(Tax Map & Parcel Number)*: R120 004 000 1031 0000

Date Submitted: 7-13-22

Certification of Correctness: I/we certify that the information in this application is correct.

Applicant's Signature: * See attached Date:

Owner's Signature: Date:

(The owner's signature is required if the applicant is not the owner.)

Required Project Information

DEVELOPMENT REVIEW PROCESS
HISTORIC REVIEW BOARD APPLICATION

Community & Economic Development Department
1911 Boundary Street, Beaufort, South Carolina, 29902
p. (843) 525-7011 / f. (843) 986-5606
www.cityofbeaufort.org

☐ Staff Review
☐ Board Review

Application Fee:
see attached schedule

OFFICE USE ONLY: **Date Filed:** _____ **Application #:** _____ **Zoning District:** _____
BCAGHS Survey: ☐ Yes ☐ No

Schedule: The Historic Review Board (HRB) typically meets the 2nd Wednesday of each month at 2pm. The complete schedule, along with the list of deadlines, may be found here - http://www.cityofbeaufort.org/historic-review-board.aspx

Submittal Requirements: All forms and information shall be submitted digitally. In addition to a complete application form, applicants shall submit the required items according to the checklists on the subsequent page.

Review Request: ☐ Conceptual ■ Preliminary ☐ Final ☐ Bailey Bill Approval* ☐ Change After Certification
**Requires a Bailey Bill – Part A Preliminary Review Application Form*

Pursuant to Section 6-29-1145 of the South Carolina Code of Laws, is this tract or parcel restricted by any recorded covenant that is contrary to, conflicts with, or prohibits the activity described in this application? ☐ Yes ■ No

Applicant, Property, and Project Information

Applicant Name: Bill Allison; Allison Ramsey Architects

Applicant Address: 1003 Charles St

Applicant E-mail: wallison@allisonramseyarchitect.co Applicant Phone Number: 843-986-0559

Applicant Title: ☐ Homeowner ☐ Tenant ■ Architect ☐ Engineer ☐ Developer

Owner (if other than the Applicant): Bill & Janny DeLoache

Owner Address: 217 Cottage Place, Charlotte, NC 28207

Project Name: DeLoache Residence

Property Address: 607 King St

Property Identification Number *(Tax Map & Parcel Number)*: R120 004 000 1031 0000

Date Submitted: 2-25-22

Certification of Correctness: I/we certify that the information in this application is correct.

Applicant's Signature: _____ Date: 3-7-22

Owner's Signature: William D. DeLoache Date: 3/7/22

(The owner's signature is required if the applicant is not the owner.)

Required Project Information

DEVELOPMENT REVIEW PROCESS

HISTORIC REVIEW BOARD APPLICATION

Community & Economic Development Department
1911 Boundary Street, Beaufort, South Carolina, 29902
p. (843) 525-7011 / f. (843) 986-5606
www.cityofbeaufort.org

Project Name: DeLoache Residence

Property Size in Acres: 0.1400 Proposed Building Use: single family residential

Nature of Work (check all that apply):

■ New Construction, Primary Structure ☐ New Construction, Primary Structure ☐ Alterations / Additions

☐ Demolition* ☐ Relocation* **Demolition and Relocation requires a public hearing*

Building Square Footage (if multiple buildings, please list each one and their square footage by floor):

Is this project a redevelopment project: ☐ Y ☑ N

Are there existing buildings on the site? ☐ Y ☑ N if yes, will they remain? ☐ Y ☐ N

Provide a brief Project Narrative (if requesting Bailey Bill Approval, this section may be left blank):

This is a new two-story residence in The Point neighborhood at 607 King St on a currently vacant lot.

CONTACT INFORMATION –

Attention: Julie A. Bachety, Administrative Assistant II
City of Beaufort Department of Planning & Development Services
1911 Boundary Street, Beaufort, South Carolina 29902
E-Mail: jbachety@cityofbeaufort.org: | Phone: (843) 525-7011 | Fax: (843) 986-5606

SYMBOLS + KEYS

DOOR AND WINDOW SIZE KEY
2860 = 2'-8" WIDE x 6'-0" HIGH

DRAWING NUMBER — 1 / 3 = SECTION OR ELEVATION — SHEET NUMBER

ROOM TITLE
KITCHEN
10' CLG. WOOD
CEILING HEIGHT — FLOOR FINISH

1 DRAWING TITLE
DETAIL OR ELEVATION NUMBER

14.00' = ELEVATION ABOVE SEA LEVEL
1 = REVISION NUMBER
= REVISION CLOUD
REF. = PLAN REFERENCE NORTH

	SINGLE POLE SWITCH
	THREE WAY SWITCH
	FOUR WAY SWITCH
	DIMMER SWITCH
	SPEED CONTROL
	DUPLEX OUTLET
	1/2 HOT OUTLET
WP	WATER PROOF OUTLET
GF	GROUND FAULT OUTLET
	QUADRUPLEX OUTLET
	SPECIALTY OUTLET
	FLOOR OUTLET
	TELEPHONE JACK
T	THERMOSTAT
	TELEVISION JACK
V	VENT
V/L	VENT w/ LIGHT
	SURFACE MOUNTED FIXTURE
	RECESSED FIXTURE
	WALL MOUNTED FIXTURE
	FLOOD LIGHT
	LED FIXTURE
	CEILING FAN
	STRIP LIGHTING
J	CEILING BOX
B	DOOR CHIME
	ELECTRICAL PANEL
S	SMOKE DETECTOR
CO	CARBON MONOXIDE DETECTOR

COLORS

METAL STANDING SEAM ROOF - REGAL RED
SIDING, TRIM, P.T. WINDOWS, RAILING -
SHERWIN WILLIAMS SW7000 IBIS WHITE
FOUNDATION BRICK: OLD CAROLINA WHITEWASHED LONDONTOWNE
DOORS, TOP RAIL, SCREENING: SHERWIN WILLIAMS DURON
DCR099 CHARLESTON GREEN
WINDOWS: BLACK METAL CLAD
SHUTTERS: SHERWIN WILLIAMS SW7660 EARL GRAY
DECKING: OAK STAIN



CONCEPTUAL RENDERING

DRAWING INDEX

0	COVER SHEET
S	SITE PLAN
1	FOUNDATION PLAN
2	FIRST FLOOR PLAN
3	SECOND FLOOR PLAN
4	ELEVATIONS
5	ELEVATIONS
6	WALL SECTIONS/ DETAILS/ ROOF PLAN
7	FIRST FLOOR ELECTRICAL LAYOUT
8	SECOND FLOOR ELECTRICAL LAYOUT
SP1	SPECIFICATIONS
SP2	SPECIFICATIONS
SP3	SPECIFICATIONS

GENERAL INFO.

AREA CALCULATIONS

FIRST FLOOR HEATED = 2034 S.F.
SECOND FLOOR HEATED = 722 S.F.
TOTAL HEATED = 2756 S.F.
SCREENED PORCH = 517 S.F.
COVERED PORCH = 464 S.F.

DELOACHE RESIDENCE

607 KING STREET, BEAUFORT, SC

DELOACHE RESIDENCE
607 KING STREET, BEAUFORT, SC

ALLISON RAMSEY Architects Inc. creating sustainable timeless design
1003 Charles St.
Beaufort SC, 29902
(843) 986-0559
www.allisonramseyarchitect.com

THIS PLAN HAS BEEN PREPARED TO MEET TOP PROFESSIONAL STANDARDS AND PRACTICES. HOWEVER, BUILDING CODES AND ENVIRONMENTAL CONDITIONS VARY FOR DIFFERENT LOCATIONS. IT IS THE RESPONSIBILITY OF THE PURCHASER OF THIS PLAN TO PERFORM THE FOLLOWING BEFORE BEGINNING CONSTRUCTION. ALLISON RAMSEY ARCHITECTS, INC. ASSUMES NO LIABILITY FOR ANY WORK CONSTRUCTED FROM THIS PLAN.

- VERIFY ALL DIMENSIONS PRIOR TO PROCEEDING WITH CONSTRUCTION
- VERIFY COMPLIANCE WITH ALL LOCAL CODES
- PLANS INDICATE LOCATIONS ONLY, ENGINEERING ASPECTS SHOULD INCORPORATE ACTUAL SITE CONDITIONS.
- HVAC + PLUMBING LAYOUTS ARE NOT INCLUDED. THESE SHOULD BE OBTAINED FROM A LOCAL HVAC CONTRACTOR OR ENGINEER TO ENSURE COMPLIANCE WITH LOCAL CODE AND THAT EQUIPMENT IS SIZED CORRECTLY FOR YOUR PARTICULAR DESIGN AND CONDITIONS.
- VERIFY ALL STRUCTURAL ELEMENTS WITH LOCAL ENGINEER AND CONTRACTOR.

DATE:	07/11/2022
JOB NO.	20370
DWN. BY:	JW
DWG. NAME:	20220711-20370.DWG

0

Copyright 2022 by Allison Ramsey Architects, Inc. All rights reserved.

SYMBOLS + KEYS

DOOR AND WINDOW SIZE KEY
2860 = 2'-8" WIDE x 6'-0" HIGH



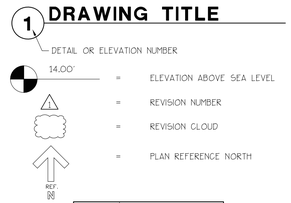

S	SINGLE POLE SWITCH
S3	THREE WAY SWITCH
S4	FOUR WAY SWITCH
SD	DIMMER SWITCH
SDC	SPEED CONTROL
	DUPLEX OUTLET
	1/2 HOT OUTLET
WP	WATER PROOF OUTLET
GF	GROUND FAULT OUTLET
	QUADRUPLEX OUTLET
	SPECIALTY OUTLET
	FLOOR OUTLET
	TELEPHONE JACK
T	THERMOSTAT
TV	TELEVISION JACK
V	VENT
V/L	VENT w/ LIGHT
	SURFACE MOUNTED FIXTURE
	RECESSED FIXTURE
	WALL MOUNTED FIXTURE
	FLOOD LIGHT
	LED FIXTURE
	CEILING FAN
	STRIP LIGHTING
J	CEILING BOX
B	DOOR CHIME
	ELECTRICAL PANEL
S	SMOKE DETECTOR
CO	CARBON MONOXIDE DETECTOR

PREVIOUS SUBMISSION

COLORS

METAL STANDING SEAM ROOF - REGAL RED
SIDING, TRIM, P.T. WINDOWS, RAILING -
SHERWIN WILLIAMS SW7000 IBIS WHITE
FOUNDATION BRICK: OLD CAROLINA WHITEWASHED LONDONTOWNE
DOORS, TOP RAIL, SCREENING: SHERWIN WILLIAMS DURON
DCR099 CHARLESTON GREEN
WINDOWS: BLACK METAL CLAD
SHUTTERS: SHERWIN WILLIAMS SW7660 EARL GRAY
DECKING: OAK STAIN



CONCEPTUAL RENDERING

DRAWING INDEX

0	COVER SHEET
S	SITE PLAN
1	FOUNDATION PLAN
2	FIRST FLOOR PLAN
3	SECOND FLOOR PLAN
4	ELEVATIONS
5	ELEVATIONS
6	WALL SECTIONS/ DETAILS/ ROOF PLAN
7	FIRST FLOOR ELECTRICAL LAYOUT
8	SECOND FLOOR ELECTRICAL LAYOUT
SP1	SPECIFICATIONS
SP2	SPECIFICATIONS
SP3	SPECIFICATIONS

GENERAL INFO.

AREA CALCULATIONS

FIRST FLOOR HEATED = 1961 S.F.
SECOND FLOOR HEATED = 758 S.F.
TOTAL HEATED = 2719 S.F.
GARAGE AND STORAGE = XXXX S.F.
SCREENED PORCH = 609 S.F.
COVERED PORCH = 460 S.F.

DELOACHE RESIDENCE

607 KING STREET, BEAUFORT, SC

DELOACHE RESIDENCE

607 KING STREET, BEAUFORT, SC

ALLISON RAMSEY Architects, Inc. creating sustainable timeless design
1003 Charles St.
Beaufort SC, 29902
(843) 986-0559
www.allisonramseyarchitect.com

THIS PLAN HAS BEEN PREPARED TO MEET CUP PROFESSIONAL STANDARDS AND PRACTICES. HOWEVER, BUILDING CODES AND ENVIRONMENTAL CONDITIONS VARY FOR DIFFERENT LOCATIONS. IT IS THE RESPONSIBILITY OF THE PURCHASER OF THIS PLAN TO PERFORM THE FOLLOWING BEFORE BEGINNING CONSTRUCTION. THE PURCHASER SHOULD ADDRESS ALL ISSUES TO ASSIST FOR ANY TYPE CONSTRUCTED FROM THIS PLAN.

•VERIFY COMPLIANCE WITH ALL LOCAL CODES
•VERIFY ALL DIMENSIONS PRIOR TO PROCEEDING WITH CONSTRUCTION
•LOCATE PUBLIC UTILITIES (WATER, SEWER, GAS, ELECTRIC, TELEPHONE, CABLE)
•LOCATE ALL UNDERGROUND UTILITIES
•HVAC + PLUMBING LAYOUTS ARE NOT INCLUDED. THESE SHOULD BE OBTAINED FROM A LICENSED HVAC CONTRACTOR (MIN.) AND PLUMBING CONTRACTOR (MIN.)
•HVAC + PLUMBING LAYOUTS ARE NOT INCLUDED. THESE SHOULD BE OBTAINED FROM A LICENSED HVAC CONTRACTOR (MIN.) AND PLUMBING CONTRACTOR (MIN.)
LOCAL MECH. CONTRACTOR OR ENGINEER TO ENSURE COMPLIANCE WITH LOCAL CODE
AND THAT EQUIPMENT IN SIZE ADEQUATE FOR YOUR PARTICULAR DESIGN AND CONDITIONS.
•CERTIFY ALL SURVEYS, ELEVATIONS, AND FINAL GRADES ARE ACCURATE.

DATE:	02/25/2022
JOB NO.	20370
DWN. BY:	BAJ/ JMM5
DWG. NAME:	20370.DWG

0

Copyright 2022 by Allison Ramsey Architects, Inc. All rights reserved.

602 CARTERET



603 CARTERET





607 KING -EXISTING VACANT LOT



605 KING

DELOACHE RESIDENCE

607 KING STREET, BEAUFORT, SC

ALLISON RAMSEY Architects Inc. creating sustainable timeless design
1003 Charles St.
Beaufort SC, 29902
(843) 986-0559
www.allisonramseyarchitect.com

THIS PLAN HAS BEEN PREPARED TO MEET TOP PROFESSIONAL STANDARDS AND PRACTICES. HOWEVER, BUILDING CODES AND ENVIRONMENTAL CONDITIONS VARY FOR DIFFERENT LOCATIONS. IT IS THE RESPONSIBILITY OF THE PURCHASER OF THIS PLAN TO PREPARE THE FOLLOWING: BEFORE BEGINNING CONSTRUCTION, ALLISON RAMSEY ARCHITECTS, INC. ASSUMES NO LIABILITY FOR ANY WORK CONSTRUCTED FROM THIS PLAN.

- VERIFY ALL DIMENSIONS PRIOR TO PROCEEDING WITH CONSTRUCTION
- VERIFY COMPLIANCE WITH ALL LOCAL CODES
- PLANS INDICATE LOCATIONS ONLY, ENGINEERING ASPECTS SHOULD INCORPORATE ACTUAL SITE CONDITIONS.
- PLANS & PLANNING LIMITATIONS ARE NOT INCLUDED. THESE SHOULD BE OBTAINED FROM A LOCAL MEDIA CONTRACTOR OR ENGINEER TO ENSURE COMPLIANCE WITH LOCAL CODE AND THAT EQUIPMENT IS SIZED CORRECTLY FOR YOUR PARTICULAR REGION AND CONDITIONS.
- VERIFY ALL STRUCTURAL ELEMENTS WITH LOCAL ENGINEER AND/OR ARCHITECT.

DATE:	03/17/2021
JOB NO.	20370
DWN. BY:	BA/ JWA5
DWG. NAME:	20370.DWG

Copyright 2021 by Allison Ramsey Architects, Inc. All rights reserved.

603 KING - VACANT



603 KING LOOKING TOWARDS 601 NEW





603 CARTERET



601 NEW

DELOACHE RESIDENCE

607 KING STREET, BEAUFORT, SC

ALLISON RAMSEY Architects, Inc. creating sustainable timeless design
1003 Charles St.
Beaufort S.C. 29902
(843) 986-0559
www.allisonramseyarchitect.com

THIS PLAN HAS BEEN PREPARED TO MEET TOP PROFESSIONAL STANDARDS AND PRACTICES. HOWEVER, BUILDING CODES AND ENVIRONMENTAL CONDITIONS VARY FOR DIFFERENT LOCATIONS. IT IS THE RESPONSIBILITY OF THE PURCHASER OF THIS PLAN TO VERIFY THE FOLLOWING BEFORE BEGINNING CONSTRUCTION. ALLISON RAMSEY ARCHITECTS, INC. ASSUMES NO LIABILITY FOR ANY ITEMS CONSTRUCTED FROM THIS PLAN.

- VERIFY ALL DIMENSIONS PRIOR TO PROCEEDING WITH CONSTRUCTION
- VERIFY COMPLIANCE WITH ALL LOCAL CODES
- PLANS MAY REQUIRE ADDITIONAL ENGINEERING ASPECTS; SHOULD INCORPORATE
- ELEC. & MECH. LOADS
- STRUCT. & PLUMBING LAYOUTS ARE NOT INCLUDED. THESE SHOULD BE OBTAINED FROM A LOCAL MECH. CONTRACTOR OR ENGINEER TO ENSURE COMPLIANCE WITH LOCAL CODE AND THAT EQUIPMENT IS SIZED CORRECTLY FOR YOUR PARTICULAR HOUSE AND CONDITIONS.
- VERIFY ALL STRUCTURAL LAYOUTS & DETAILS, ENGINEER WHERE APPROPRIATE

DATE:	03/17/2021
JOB NO.	20370
DWN. BY:	BA/ JMAS
DWG. NAME:	20370.DWG

Copyright 2021 by Allison Ramsey Architects, Inc. All rights reserved.

501 KING



606 NEW





504 KING



508 KING

DELOACHE RESIDENCE

607 KING STREET, BEAUFORT, SC

ALLISON RAMSEY Architects, inc. creating sustainable timeless design
1003 Charles St.
Beaufort SC, 29902
(843) 986-0559
www.allisonramseyarchitect.com

THIS PLAN HAS BEEN PREPARED TO MEET CITY PROFESSIONAL STANDARDS AND PRACTICES. HOWEVER, BUILDING CODES AND ENVIRONMENTAL CONDITIONS VARY FOR DIFFERENT LOCATIONS. IT IS THE RESPONSIBILITY OF THE PURCHASER OF THIS PLAN TO VERIFY THE FOLLOWING BEFORE BEGINNING CONSTRUCTION. ALLISON RAMSEY ARCHITECTS ASSUMES NO LIABILITY FOR ANY ITEMS CONSTRUCTED FROM THIS PLAN.

- VERIFY ALL DIMENSIONS PRIOR TO PROCEEDING WITH CONSTRUCTION
- VERIFY COMPLIANCE WITH ALL LOCAL CODES
- PLANS REQUIRE LOCATIONS ONLY; ENGINEERING ASPECTS SHOULD ACCOMPANY
- ELECTRICAL LOCATIONS
- HVAC + PLUMBING LAYOUTS ARE NOT INCLUDED. THESE SHOULD BE OBTAINED FROM A LOCAL HVAC CONTRACTOR OR ENGINEER TO ENSURE COMPLIANCE WITH LOCAL CODE AND PROPER EQUIPMENT & DUCT SIZINGS. ITEMS FOR PARTICULAR KITCHEN AND LAUNDRIES.
- VERIFY ALL STRUCTURAL LETTERS, LOCAL CONDITIONS & SPECIFICATIONS.

DATE:	03/17/2021
JOB NO.	20370
DWN. BY:	BAV JWAS
DWG. NAME:	20370.DWG

Copyright 2021 by Allison Ramsey Architects, Inc. All rights reserved.

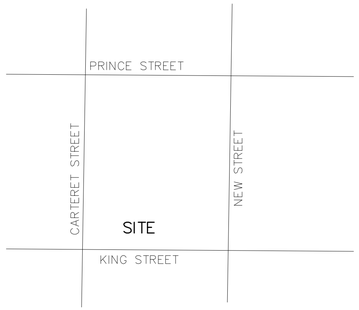

LOCATION MAP (N.T.S.)

NOTES:

1.) THE BEARINGS SHOWN HEREON ARE MAGNETIC AND AS SUCH ARE SUBJECT TO LOCAL ATTRACTION.
2.) THIS PLAT DOES NOT CERTIFY THE PRESENCE OR ABSENCE OF U.S. ARMY CORPS OF ENGINEERS JURISDICTIONAL WETLANDS.
3.) METHOD OF AREA CALCULATION BASED ON COORDINATE METHOD.
4.) LOCATION OF UNDERGROUND UTILITIES ARE FROM SURFACE INDICATIONS ONLY AND ARE NOT CERTIFIABLE.
5.) THIS PLAT REPRESENTS A SURVEY BASED ON THE LISTED REFERENCES ONLY AND IS NOT THE RESULT OF A TITLE SEARCH.
6.) CERTIFICATIONS ARE NOT TRANSFERABLE TO ADDITIONAL INSTITUTIONS OR SUBSEQUENT OWNERS.
7.) THE CERTIFIER HAS NOT INVESTIGATED OR BEEN INSTRUCTED TO INVESTIGATE THE EXISTENCE OR NONEXISTENCE OF ANY OVERLAY DISTRICTS, SUCH AS; AIRPORT, MILITARY, NOISE, CRASH POTENTIAL OR ENVIRONMENTAL ISSUES.
8.) BEFORE ANY DESIGN WORK OR CONSTRUCTION ON THIS SITE IS STARTED FLOOD ZONE INFORMATION MUST BE VERIFIED BY PROPER BUILDING CODES OFFICIAL.
9.) THIS PROPERTY APPEARS TO LIE IN FLOOD ZONE A11 EL. 13.00' AS DETERMINED BY F.E.M.A. FIRM COMM-PANEL NUMBER 450026 0005 D. DATED 09/29/86
10.) CONTOUR INTERVAL IS 1'.
11.) VERTICAL DATUM IS 1929 NGVD.

REFERENCES:

1.) T.M.S. R120 004 000 1031 0000
2.) PLAT BY R.D. TROGDON JR.
DATED MAY 2, 1986
DEED BOOK 449, PAGE 1266
BEAUFORT COUNTY R.M.C. OFFICE
3.) PLAT BY F. STEVEN JOHNSON
DATED OCTOBER 25, 1990
DEED BOOK 575, PAGE 2364
BEAUFORT COUNTY R.M.C. OFFICE
4.) JUDGMENT ROLL # 87391
5.) PLAT BY DAVID E. GASQUE
DATED 1/25/16 REV: 7/26/16
PLAT BOOK 144, PAGE 192
BEAUFORT COUNTY R.M.C. OFFICE

I, David E. Gasque, a Registered Professional Land Surveyor in the State of South Carolina, certify to client(s) shown hereon that to the best of my knowledge , information and belief, the survey shown hereon was made in accordance with the requirements of the minimum standards manual for the practice of land surveying in South Carolina, and meets or exceeds the requirements for a CLASS survey as specified therein, also there are no encroachments or projections other than shown. This survey is not valid unless it bears the orginal signature and has an embossed seal.

David E. Gasque, R.L.S.
S.C. Registration Number 10506

GASQUE & ASSOCIATES INC.
LAND SURVEYORS · PLANNERS
28 PROFESSIONAL VILLAGE CIRCLE, BEAUFORT, S.C.
P.O. BOX 1363, BEAUFORT, S.C.
(843) 522-1798

THIS PLAT IS COPYRIGHTED AND IS ONLY INTENDED FOR THE USE OF THE ENTITY OR PERSON(S) SHOWN HERE ON.

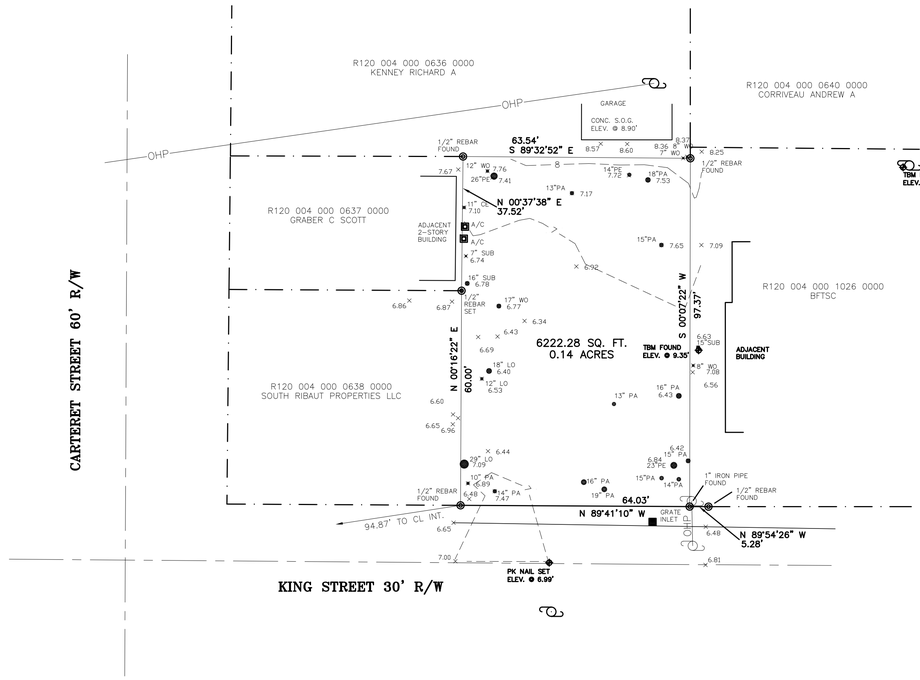

GRAPHIC SCALE

20 0 10 20 40 80
(IN FEET)
1 inch = 20 ft.

LEGEND OF SYMBOLS & ABBREVIATIONS

LEGEND

	FIRE HYDRANT
CO	CLEAN OUT
PP	POWER POLE
TP	TELEPHONE PEDESTAL
FO	FIBER OPTIC STUB
WV	WATER VALVE
GV	GAS VALVE
	WATER METER
	1/2"ROD SET
	TREE SIZE & TYPE
	ELEVATION
MVM	MAIN VALVE MONUMENT
MH	MANHOLE
GW	GUY WIRE
CB	CABLE BOX
OHP	OVERHEAD POWERLINE
	EDGE OF PAVEMENT
	BACK OF CURB
	LIGHTPOLE
	GAS LINE
	CENTER LINE
	CONTOUR LINE

REF PLAT

TREE LEGEND

CODE	COMMON NAME	BOTANICAL NAME
PN	PINE	Pinus spp.
LO	LIVE OAK	Quercus virginiana
O	OAK	Quercus spp.
MAG	SOUTHERN MAGNOLIA	Magnolia grandiflora
PA	PALMETTO	Sabal palmetto
SUB	SUGARBERRY	Celtis laevigata
EL	ELM	Ulmus spp.
HI	HICKORY	Carya spp.
BAY	BAY MAGNOLIA	Gordonia spp.
WX	WAX MYRTLE	Myrica cerifera
CH	CHERRY	Prunus spp.
CE	EASTERN RED CEDAR	Juniperus virginiana
TA	CHINESE TALLOW-TREE	Sapium sebiferum
PO	YELLOW POPLAR	Liriodendron tulipifera
BI	BIRCH	Betula spp.
CY	BALDCYPRESS	Taxodium distichum
SY	AMERICAN SYCAMORE	Platanus occidentalis
PE	PECAN	Carya illinoensis
CR	CRAPEMYRTLE	Lagerstroemia indica
FR	FRUIT TREE	
MP	MAPLE	Morus spp.
DW	DOGWOOD	Cornus florida
GUM	GUM	
UNK	UNKNOWN	

ALL TREES ARE LOCATED TO THE FACE OF THE TREE TRUNK, THEREFORE TOLERANCE OF THE TREE LOCATED IS PLUS OR MINUS THE DIAMETER OF THE TREE PLUS 0.5 FEET. ALL TREES ARE MEASURED AT CHEST HEIGHT WHICH IS APPROXIMATELY 40 INCHES ABOVE GROUND. GROUND ELEVATION AT TREE LOCATIONS MAY OR MAY NOT ACCURATELY REPRESENT ELEVATIONS BETWEEN TREE SHOTS DUE TO THE GROUND BUTTRESS AT THE BASE OF THE TREE.
*NOTE*ANY TREE LOCATION THAT IS CRITICAL BEYOND THE TOLERANCE STATED ABOVE FOR DESIGN MUST BE POINTED OUT AND A TIGHTER TOLERANCE MUST BE AGREED UPON.

SOUTH CAROLINA
GASQUE & ASSOCIATES, INC. No. C00192
CERTIFICATE OF AUTHORIZATION

TREE AND TOPOGRAPHICAL SURVEY
LOT C, PORTION OF BLOCK 34
PREPARED FOR
WILLIAM GARRISON DELOACHE
JANET RAWLS DELOACHE
CITY OF BEAUFORT
BEAUFORT COUNTY SOUTH CAROLINA

DATE: JULY 17, 2017 SCALE: 1" = 20'
DATE: UPDATE 7/29/2019

JOB# 47116 F.B.# 953/TT DRAWN BY Dsgn.7 JEC

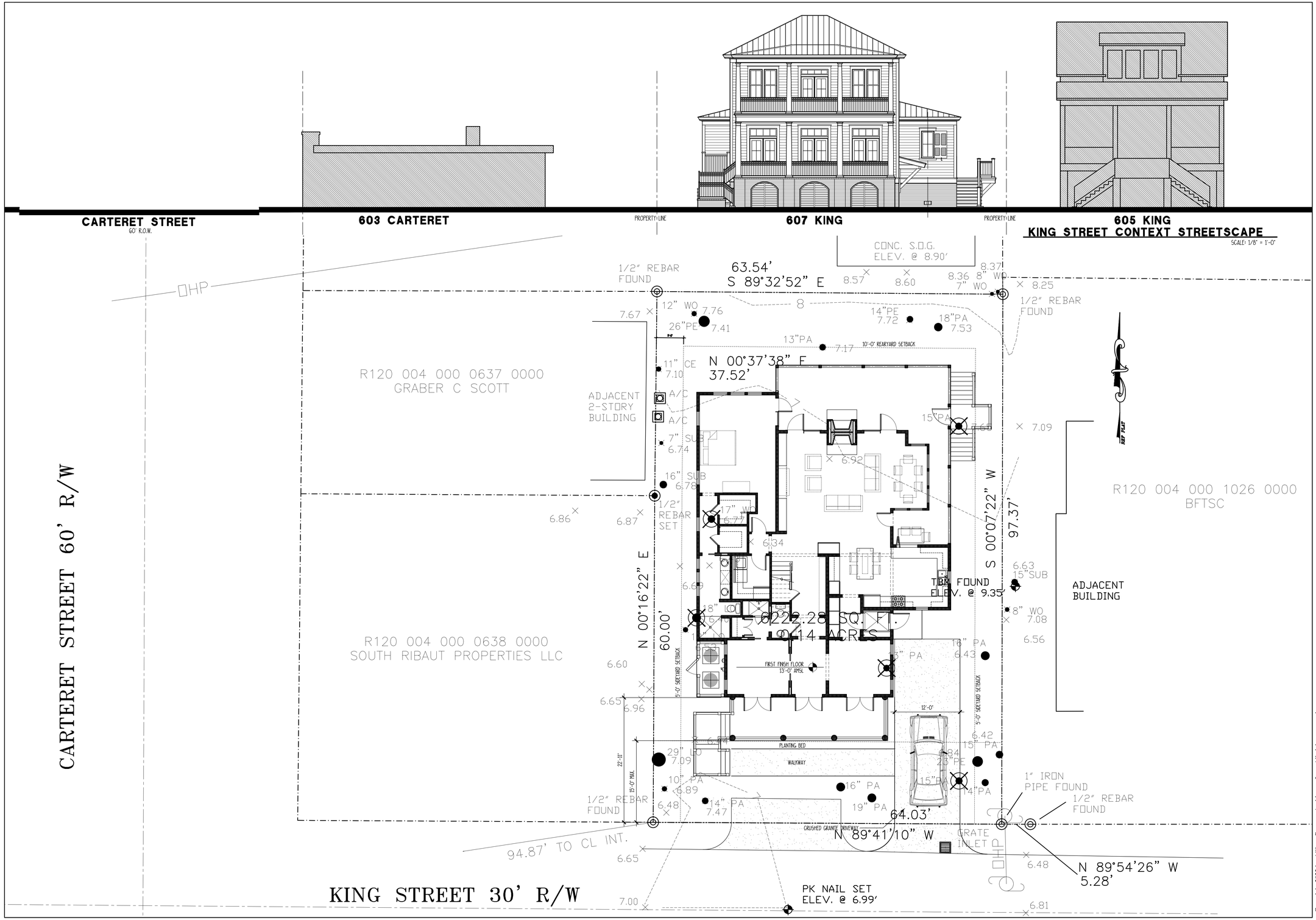

DELOACHE RESIDENCE

607 KING STREET, BEAUFORT, SC

ALLISON RAMSEY Architects, Inc. creating sustainable timeless design
1003 Charles St.
Beaufort SC, 29902
(843) 986-0559
www.allisonramseyarchitect.com

THIS PLAN WAS REVIEWED TO MEET TOP PROTECTIVE STANDARDS AND PRACTICES. DOMESTIC BUILDING CODES AND ENVIRONMENTAL CONDITIONS VARY FOR DIFFERENT LOCATIONS. IT IS THE RESPONSIBILITY OF THE OWNER/USER OF THIS PLAN TO PERFORM THE FOLLOWING BEFORE BEGINNING CONSTRUCTION. ALLISON RAMSEY ARCHITECTS, INC. ASSUMES NO LIABILITY FOR ANY WORK CONSTRUCTED FROM THIS PLAN.

- VERIFY ALL DIMENSIONS PRIOR TO PROCEEDING WITH CONSTRUCTION
- VERIFY COMPLIANCE WITH ALL LOCAL CODES
- PLANS INDICATE LOCATIONS ONLY; ENGINEERING ASPECTS SHOULD BE INCORPORATE BY A QUALIFIED ENGINEER.
- ANGLE & PLUMBING LAYOUTS ARE NOT RELIABLE. THESE SHOULD BE OBTAINED FROM A LOCAL TRADE CONTRACTOR OR ENGINEER TO ENSURE COMPLIANCE WITH LOCAL CODE AND THEIR EQUIPMENT'S SIZE CONSTRAINTS FOR YOUR PARTICULAR REGION AND CONDITIONS.
- VERIFY ALL FRAMING, SLOPES & SIZES COMPLY WITH LOCAL ENGINEER AND ARCHITECT

DATE:	07/11/2022
JOB NO.	20370
DWN. BY:	JW
DWG. NAME:	20220711-20370.DWG

Copyright 2022 by Allison Ramsey Architects, Inc. All rights reserved.

S

PREVIOUS SUBMISSION

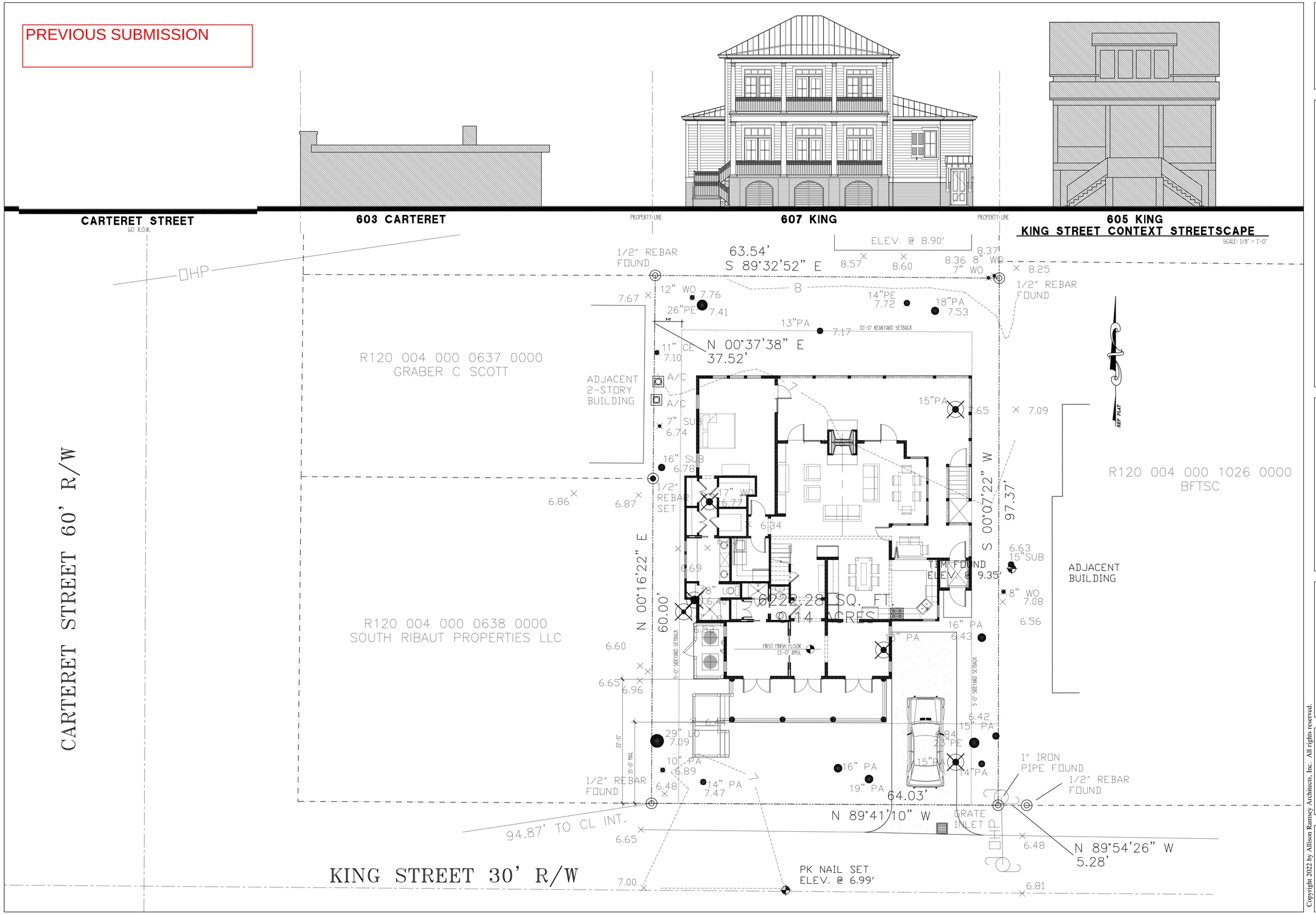

DELOACHE RESIDENCE

607 KING STREET, BEAUFORT, SC

ALLISON RAMSEY Architects Inc. creating sustainable timeless design
1003 Charles St.
Beaufort SC, 29902
(843) 986-0559
www.allisonramseyarchitect.com

THIS PLAN HAS BEEN PREPARED TO MEET TOP PROFESSIONAL STANDARDS AND PRACTICES. ENGINEER, BUILDING CODES AND ENVIRONMENTAL CONDITIONS VARY FOR DIFFERENT LOCATIONS. IT IS THE RESPONSIBILITY OF THE PURCHASER OF THIS PLAN TO PERFORM THE FOLLOWING: BEFORE BEGINNING CONSTRUCTION, ALLISON RAMSEY ARCHITECTS, INC. ASSUMES NO LIABILITY FOR ANY TYPE CONSTRUCTED FROM THIS PLAN.

-VERIFY ALL DIMENSIONS PRIOR TO PROCEEDING WITH CONSTRUCTION
-VERIFY COMPLIANCE WITH ALL LOCAL CODES
-PLANS INDICATE LOCATIONS ONLY, ENGINEERING ASPECTS SHOULD INCORPORATE ACTUAL SITE CONDITIONS.
-PLANS & PLANNING LAYOUTS ARE NOT INCLUDED. THESE SHOULD BE OBTAINED FROM A LOCAL PLAN, CONTRACTOR OR ENGINEER TO ENSURE COMPLIANCE WITH LOCAL CODE AND THAT EQUIPMENT IS SIZED CORRECTLY FOR YOUR PARTICULAR REGION AND CONDITIONS.
-VERIFY ALL STRUCTURAL ELEMENTS WITH LOCAL ENGINEER AND/OR ARCHITECT.

DATE:	02/25/2022
JOB NO.	20370
DWN. BY:	BA/ JWA5
DWG. NAME:	20370.DWG

S

Copyright 2022 by Allison Ramsey Architects, Inc. All rights reserved.

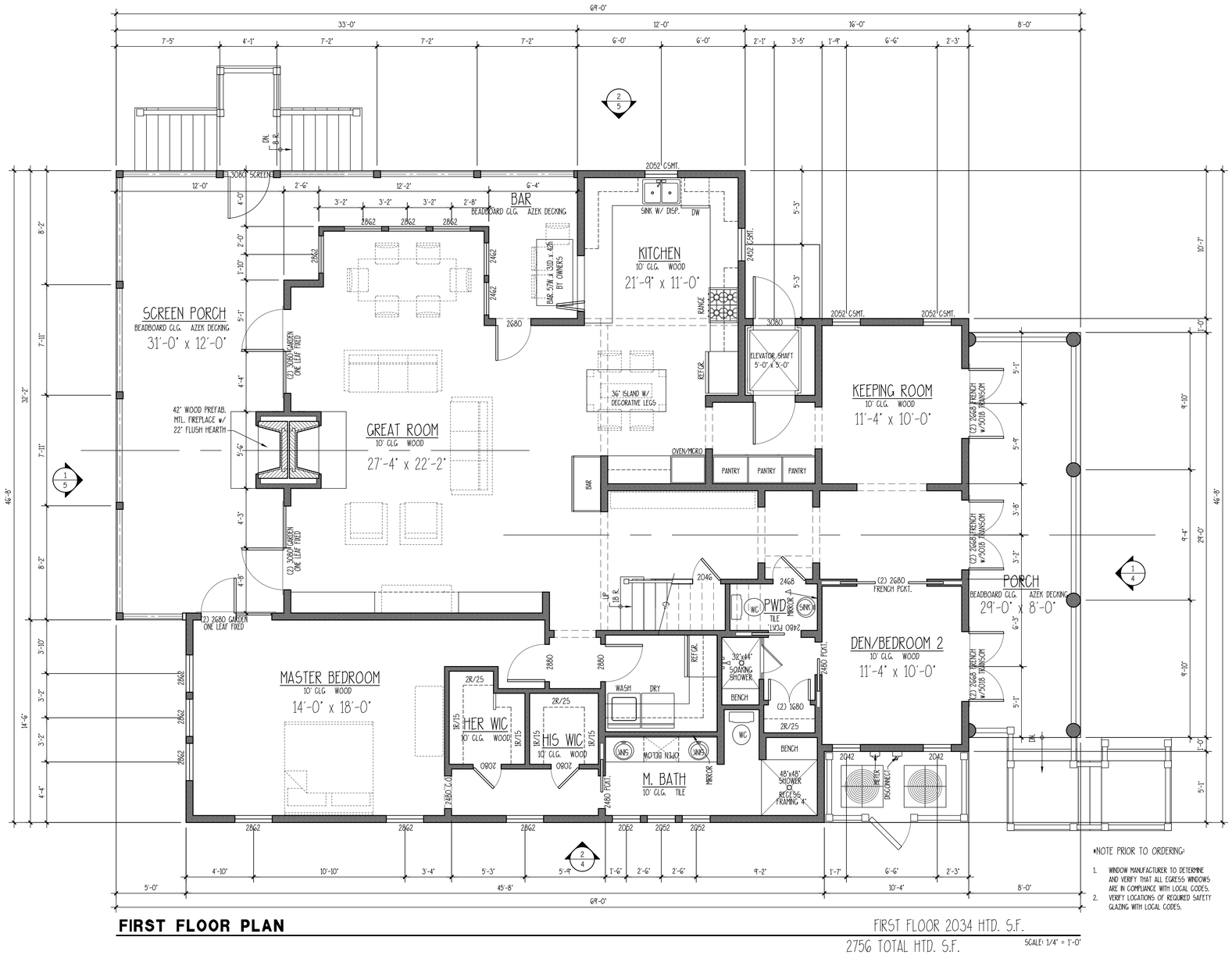

FIRST FLOOR PLAN

FIRST FLOOR 2034 HTD. S.F.
2756 TOTAL HTD. S.F.

SCALE: 1/4" = 1'-0"

*NOTE PRIOR TO ORDERING:

1. WINDOW MANUFACTURER TO DETERMINE AND VERIFY THAT ALL EGRESS WINDOWS ARE IN COMPLIANCE WITH LOCAL CODES.
2. VERIFY LOCATIONS OF REQUIRED SAFETY GLAZING WITH LOCAL CODES.

DELOACHE RESIDENCE

607 KING STREET, BEAUFORT, SC

ALLISON RAMSEY Architects, Inc. creating sustainable timeless design
1003 Charles St.
Beaufort SC, 29902
(843) 986-0559
www.allisonramseyarchitect.com

THIS PLAN HAS BEEN PREPARED TO MEET CITY PERTAINING, STANDARDS AND PRACTICES. HOWEVER, BUILDING CODES AND ENVIRONMENTAL CONDITIONS VARY FOR DIFFERENT LOCATIONS. IT IS THE RESPONSIBILITY OF THE PURCHASER OF THIS PLAN TO PERFORM THE FOLLOWING BEFORE CONSTRUCTION: CONSULT WITH A LOCAL BUILDER, ARCHITECT, OR ENGINEER TO MAKE ANY NOTE CONSTRUCTED FROM THIS PLAN.

-VERIFY COMPLIANCE WITH ALL LOCAL CODES
-PLANS INDICATE LOCATIONS ONLY; ENGINEERING ASPECTS SHOULD BE CONSIDERED
-VERIFY ALL DIMENSIONS PRIOR TO PROCEEDING WITH CONSTRUCTION
-FINAL ELECTRICAL LOCATIONS ARE NOT INCLUDED; THESE SHOULD BE OBTAINED FROM A LOCAL MECH. CONTRACTOR OR ENGINEER TO ENSURE COMPLIANCE WITH LOCAL CODE
-ANY TRIM ELEMENTS IN SECTIONS ARE FOR CLARITY ONLY. TRUE PORCH/DECK DETAILS AND CONDITIONS SHOULD BE OBTAINED FROM A LOCAL BUILDER, ARCHITECT, OR ENGINEER.

DATE:	07/11/2022
JOB NO.	20370
DWN. BY:	JW
DWG. NAME:	20220711-20370.DWG

Copyright 2022 by Allison Ramsey Architects, Inc. All rights reserved.

2

PREVIOUS SUBMISSION

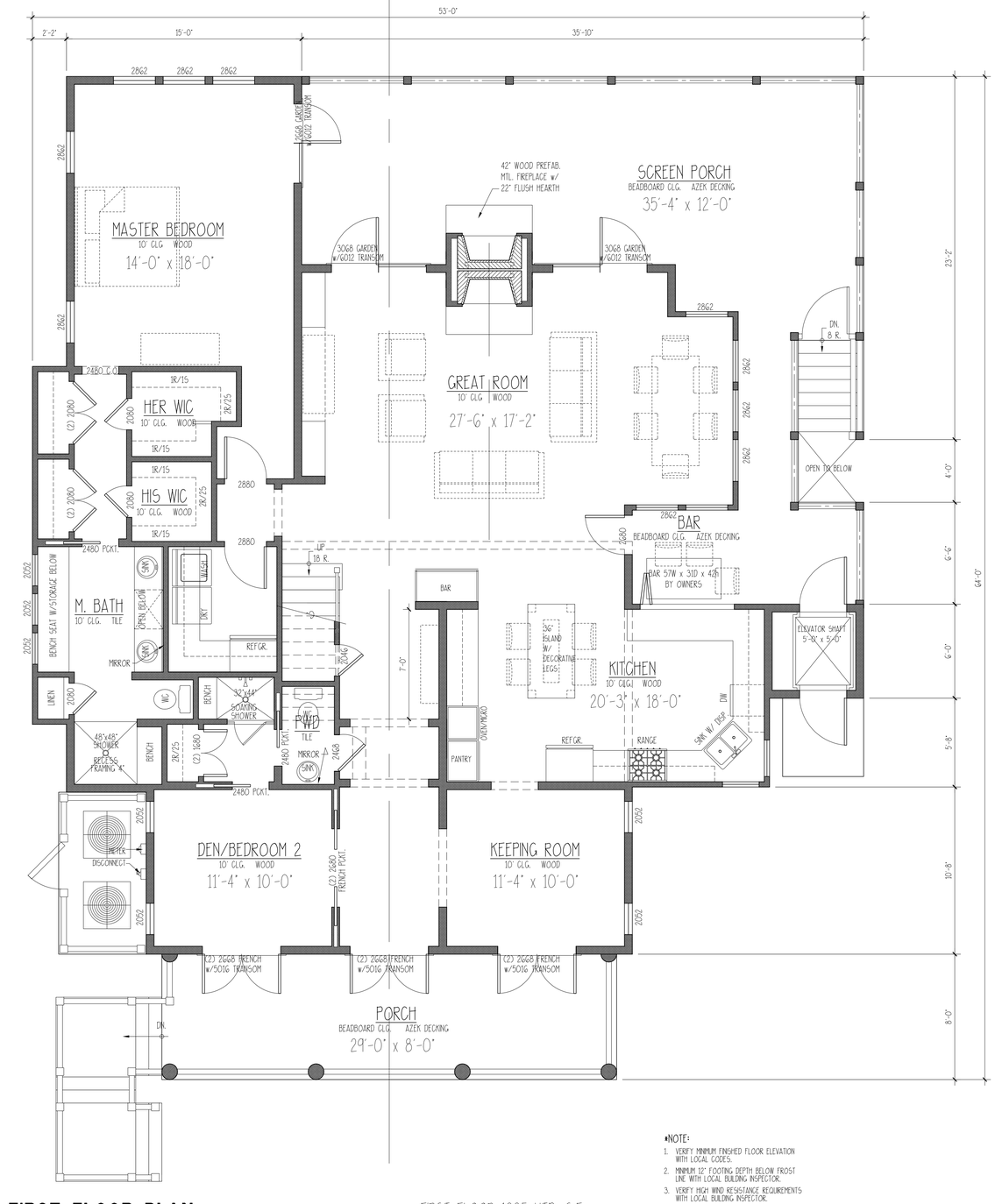

FIRST FLOOR PLAN

FIRST FLOOR 1885 HTD. S.F.
2643 TOTAL HTD. S.F.

SCALE: 1/4" = 1'-0"

*NOTE:

1. VERIFY MINIMUM FINISHED FLOOR ELEVATION WITH LOCAL CODES.
2. MINIMUM 12" FOOTING DEPTH BELOW FROST LINE WITH LOCAL BUILDING INSPECTOR.
3. VERIFY HIGH WIND RESISTANCE REQUIREMENTS WITH LOCAL BUILDING INSPECTOR.
4. WINDOW MANUFACTURER TO DETERMINE AND VERIFY THAT ALL EGRESS WINDOWS ARE IN COMPLIANCE WITH LOCAL CODES.
5. ALL EXTERIOR & INTERIOR WINDOWS & DOORS HEADERS TO BE (2) 2X8 #2 SOUTHERN YELLOW PINE AS PER 2009 IRC. R502.5(1) UNLESS NOTED OTHERWISE.

DELOACHE RESIDENCE

607 KING STREET, BEAUFORT, SC

ALLISON RAMSEY Architects, Inc. creating sustainable timeless design
1003 Charles St.
Beaufort SC, 29902
(843) 986-0359
www.allisonramseyarchitect.com

THIS PLAN HAS BEEN PREPARED TO MEET TOP PROFESSIONAL STANDARDS AND PRACTICES. HOWEVER, BUILDING CODES AND ENVIRONMENTAL CONDITIONS VARY FOR DIFFERENT LOCATIONS. IT IS THE RESPONSIBILITY OF THE PURCHASER OF THIS PLAN TO PERFORM THE FOLLOWING BEFORE BEGINNING CONSTRUCTION. ALLISON RAMSEY ARCHITECTS, INC ASSUMES NO RESPONSIBILITY FOR ANY WORK CONSTRUCTED FROM THIS PLAN.

- VERIFY COMPLIANCE WITH ALL LOCAL CODES
- PLANS REQUIRE LOCATIONS, ONLY. ENGINEERING ASPECTS SHOULD INCORPORATE LOCAL AND SITE CONDITIONS.
- HVAC & PLUMBING LAYOUTS ARE NOT INCLUDED. THESE SHOULD BE OBTAINED FROM A LOCAL HVAC CONTRACTOR OR ENGINEER TO ENSURE COMPLIANCE WITH LOCAL CODE AND SITE CONDITIONS. SEEK CONSULTANT FOR STRUCTURAL DESIGN AND CONDITIONS.

COPY OF THIS PLAN IS LICENSED WITH A SINGLE BUILDING SITE. SEPARATE AGREEMENTS ARE REQUIRED FOR MULTIPLE BUILDINGS.

DATE:	02/16/2022
JOB NO.	20370
DWN. BY:	BA/ JWA5
DWG. NAME:	20370.DWG

Copyright 2022 by Allison Ramsey Architects, Inc. All rights reserved.

2

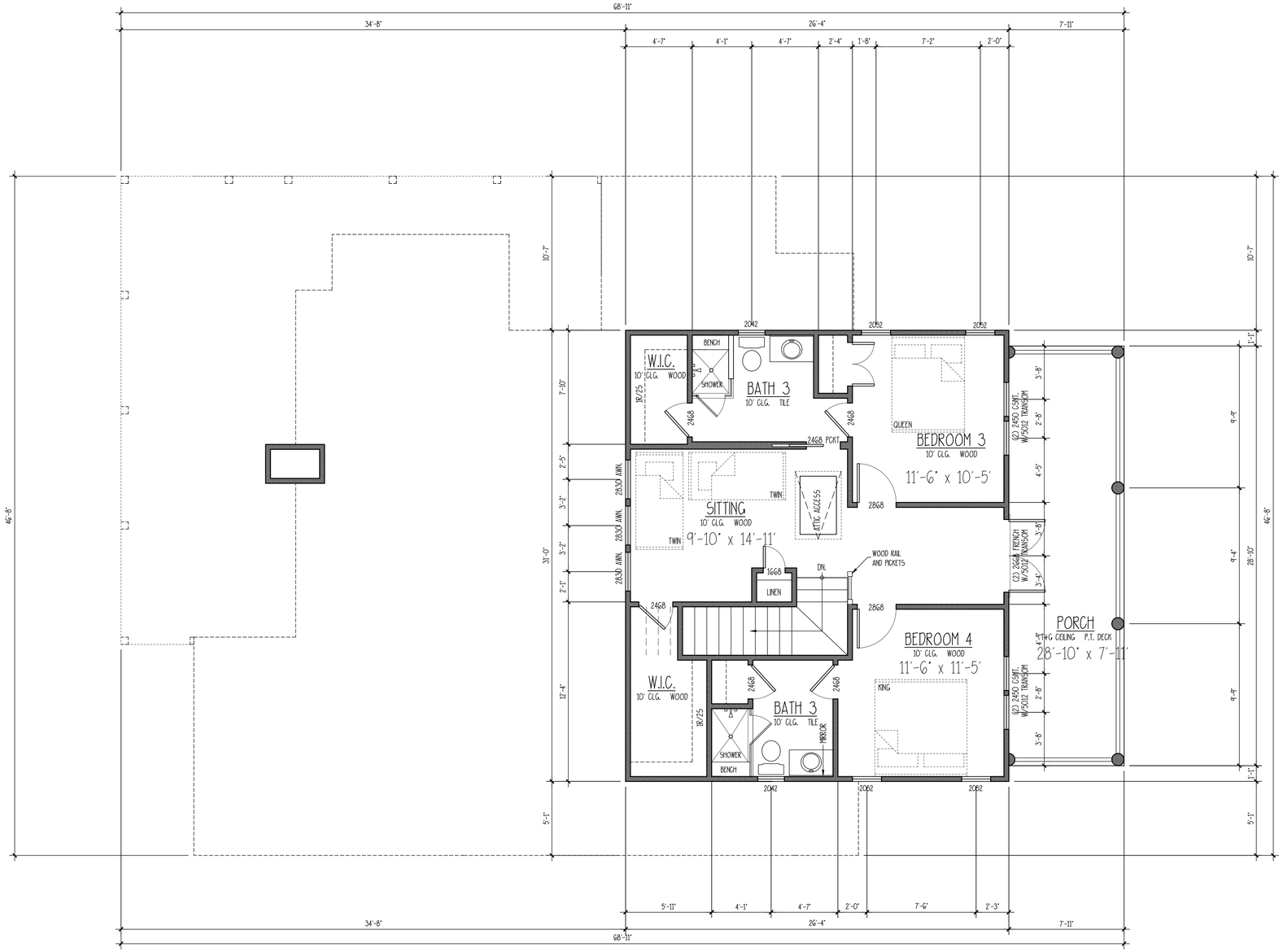

SECOND FLOOR PLAN

SECOND FLOOR 722 HTD. S.F.

SCALE: 1/4" = 1'-0"

DELOACHE RESIDENCE

607 KING STREET, BEAUFORT, SC

ALLISON RAMSEY Architects Inc. creating sustainable timeless design
1003 Charles St.
Beaufort SC, 29902
(843) 986-0559
www.allisonramseyarchitect.com

THIS PLAN HAS BEEN PREPARED TO MEET TOP PROFESSIONAL STANDARDS AND PRACTICES. HOWEVER, BUILDING CODES AND ENVIRONMENTAL CONDITIONS VARY FOR DIFFERENT LOCATIONS. IT IS THE RESPONSIBILITY OF THE PURCHASER OF THIS PLAN TO PERFORM THE FOLLOWING BEFORE BEGINNING CONSTRUCTION. ALLISON RAMSEY ARCHITECTS, INC. ASSUMES NO LIABILITY FOR ANY WORK CONSTRUCTED FROM THIS PLAN.

- VERIFY ALL DIMENSIONS PRIOR TO PROCEEDING WITH CONSTRUCTION
- VERIFY COMPLIANCE WITH ALL LOCAL CODES
- PLANS INDICATE LOCATIONS ONLY, ENGINEERING ASPECTS SHOULD INCORPORATE ACTUAL SITE CONDITIONS.
- MAG + PLUMBING LOCATIONS ARE NOT INCLUDED. THESE SHOULD BE OBTAINED FROM A LOCAL MECH. CONTRACTOR OR ENGINEER TO ENSURE COMPLIANCE WITH LOCAL CODE AND THAT EQUIPMENT IS SIZED CORRECTLY FOR YOUR PARTICULAR REGION AND CONDITIONS.
- VERIFY ALL STRUCTURAL ELEMENTS WITH LOCAL ENGINEER AND/OR ARCHITECT.

DATE:	07/11/2022
JOB NO.	20370
DWN. BY:	JW
DWG. NAME:	20220711-20370.DWG

Copyright 2022 by Allison Ramsey Architects, Inc. All rights reserved.

3

PREVIOUS SUBMISSION

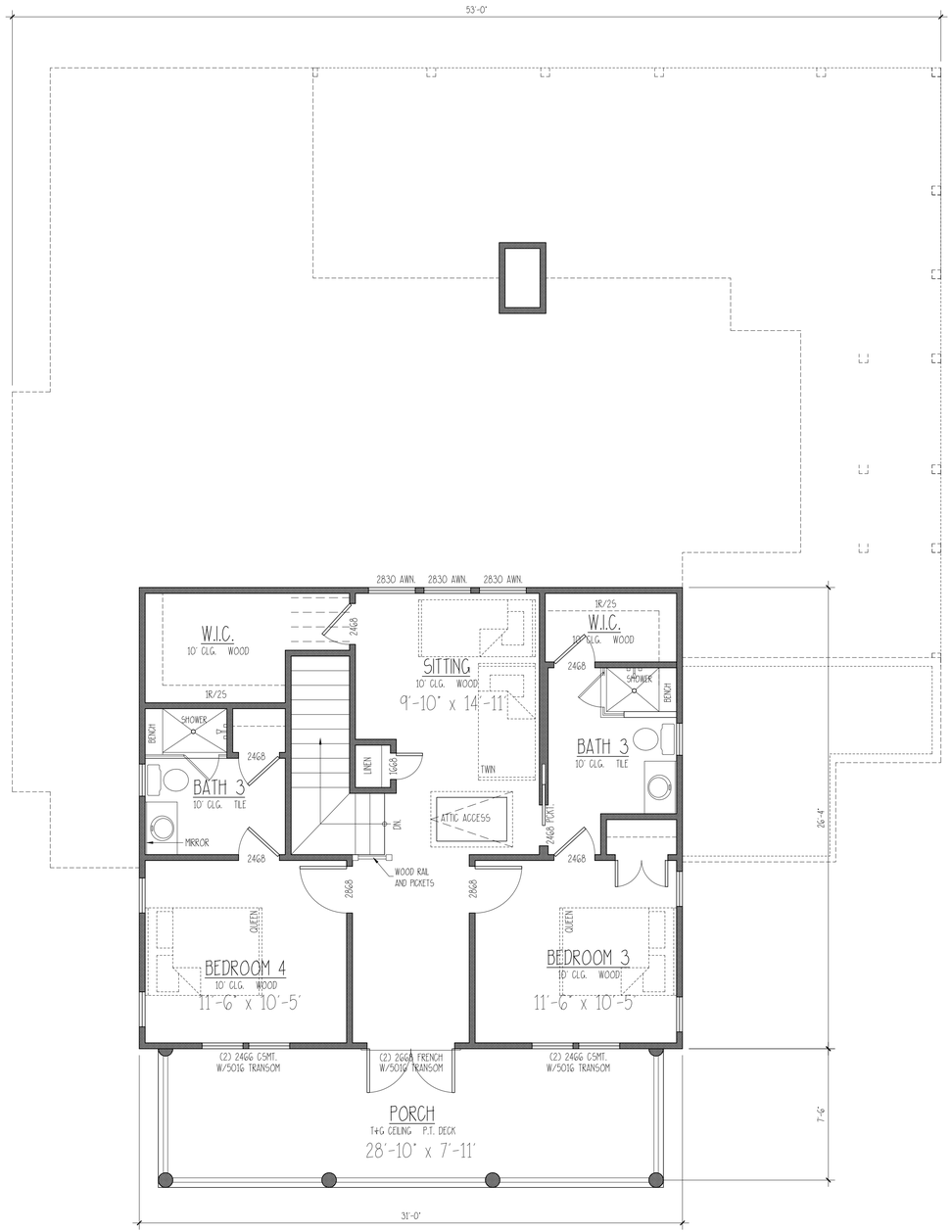

SECOND FLOOR PLAN SECOND FLOOR 758 HTD. S.F.

SCALE: 1/4" = 1'-0"

DELOACHE RESIDENCE

607 KING STREET, BEAUFORT, SC

ALLISON RAMSEY Architects, INC. creating sustainable timeless design
1003 Charles St.
Beaufort SC, 29902
(843) 986-0559
www.allisonramseyarchitect.com

THIS PLAN HAS BEEN PREPARED TO MEET 1ST PROFESSIONAL STANDARDS AND PRACTICES. HOWEVER, BUILDING CODES AND ENVIRONMENTAL CONDITIONS VARY FOR DIFFERENT LOCATIONS. IT IS THE RESPONSIBILITY OF THE PURCHASER OF THIS PLAN TO VERIFY THE FOLLOWING BEFORE BEGINNING CONSTRUCTION. ALLISON RAMSEY ARCHITECTS, INC. ASSUMES NO LIABILITY FOR ANY WORK CONSTRUCTED FROM THIS PLAN.

- VERIFY ALL DIMENSIONS PRIOR TO PROCEEDING WITH CONSTRUCTION
- VERIFY COMPLIANCE WITH ALL LOCAL CODES
- ATTIC ACCESS LOCATIONS ONLY. ENGINEERING ASPECTS SHOULD ACCOMPANY ALL SET DRAWINGS.
- HVAC & PLUMBING LAYOUTS ARE NOT INCLUDED. THESE SHOULD BE ORDERED FROM A LOCAL HVAC CONTRACTOR OR ENGINEER TO ENSURE COMPLIANCE WITH LOCAL CODE
- ANY MATERIALS OR ELECTRICAL FIXTURES SHOWN ON THESE PLANS ARE FOR ILLUSTRATION AND CONCEPTUAL PURPOSES ONLY. SPECIFICATIONS, LISTINGS, OPTIONS, CHANGES AND ADDITIONS ARE THE RESPONSIBILITY OF THE OWNER AND/OR CONTRACTOR.

DATE:	02/16/2022
JOB NO.	20370
DWN. BY:	BM/ JWA/S
DWG. NAME:	20370.DWG

Copyright 2022 by Allison Ramsey Architects, Inc. All rights reserved.

3



2 LEFT ELEVATION

SCALE: 1/4" = 1'-0"



1 FRONT ELEVATION

SCALE: 1/4" = 1'-0"

DELOACHE RESIDENCE

607 KING STREET, BEAUFORT, SC

ALLISON RAMSEY Architects Inc. creating sustainable timeless design
1003 Charles St.
Beaufort SC, 29902
(843) 986-0559
www.allisonramseyarchitect.com

THIS PLAN HAS BEEN PREPARED TO MEET TOP PROFESSIONAL STANDARDS AND PRACTICES. HOWEVER, BUILDING CODES AND ENVIRONMENTAL CONDITIONS VARY FOR DIFFERENT LOCATIONS. IT IS THE RESPONSIBILITY OF THE PURCHASER OF THIS PLAN TO PERFORM THE FOLLOWING BEFORE BEGINNING CONSTRUCTION. ALLISON RAMSEY ARCHITECTS, INC. ASSUMES NO LIABILITY FOR ANY HOME CONSTRUCTED FROM THIS PLAN.

- VERIFY ALL DIMENSIONS PRIOR TO PROCEEDING WITH CONSTRUCTION
- VERIFY COMPLIANCE WITH ALL LOCAL CODES
- PLANS INDICATE LOCATIONS ONLY, ENGINEERING ASPECTS SHOULD INCORPORATE ACTUAL SITE CONDITIONS.
- MAKE A PLUMBING LAYOUTS ARE NOT INCLUDED. THESE SHOULD BE OBTAINED FROM A LOCAL MECH. CONTRACTOR OR ENGINEER TO ENSURE COMPLIANCE WITH LOCAL CODE AND THAT EQUIPMENT IS SIZED CORRECTLY FOR YOUR PARTICULAR REGION AND CONDITIONS.
- VERIFY ALL STRUCTURAL ELEMENTS WITH LOCAL ENGINEER AND/OR ARCHITECT.

DATE:	07/11/2022
JOB NO.	20370
DWN. BY:	JW
DWG. NAME:	20220711-20370.DWG

Copyright 2022 by Allison Ramsey Architects, Inc. All rights reserved.

4

PREVIOUS SUBMISSION



2 LEFT ELEVATION

SCALE: 1/4" = 1'-0"



1 FRONT ELEVATION

SCALE: 1/4" = 1'-0"

DELOACHE RESIDENCE

607 KING STREET, BEAUFORT, SC

ALLISON RAMSEY Architects Inc. creating sustainable timeless design
1003 Charles St.
Beaufort SC, 29902
(843) 986-0559
www.allisonramseyarchitect.com

THIS PLAN HAS BEEN PREPARED TO MEET TOP PROFESSIONAL STANDARDS AND PRACTICES. DIMENSIONS, BUILDING CODES AND ENVIRONMENTAL CONDITIONS VARY FOR DIFFERENT LOCATIONS. IT IS THE RESPONSIBILITY OF THE PURCHASER OF THIS PLAN TO PERFORM THE FOLLOWING BEFORE ANY CONSTRUCTION. ALLISON RAMSEY ARCHITECTS, INC. ASSUMES NO LIABILITY FOR ANY WORK CONSTRUCTED FROM THIS PLAN.

- VERIFY ALL DIMENSIONS PRIOR TO PROCEEDING WITH CONSTRUCTION
- VERIFY COMPLIANCE WITH ALL LOCAL CODES
- PLANS INDICATE LOCATIONS ONLY; ENGINEERING ASPECTS SHOULD BE INCORPORATE BY A LICENSED ENGINEER.
- HVAC + PLUMBING LAYOUTS ARE NOT INCLUDED; THESE SHOULD BE OBTAINED FROM A LOCAL MECH. CONTRACTOR OR ENGINEER TO ENSURE COMPLIANCE WITH LOCAL CODE AND THAT EQUIPMENTS IS SIZED CORRECTLY FOR YOUR PARTICULAR DESIGN AND CONDITIONS.
- VERIFY ALL STRUCTURAL LISTINGS WITH LOCAL ENGINEER AND CONDITIONS.

DATE:	02/25/2022
JOB NO.	20370
DWG BY:	BAJ/ JWAS
DWG. NAME:	20370.DWG

Copyright 2022 by Allison Ramsey Architects, Inc. All rights reserved.

4



2 RIGHT ELEVATION w/out INSECT SCREEN

SCALE: 1/4" = 1'-0"



REAR ELEVATION w/ INSECT SCREEN

SCALE: 1/8" = 1'-0"



RIGHT ELEVATION w/ INSECT SCREEN

SCALE: 1/8" = 1'-0"



1 REAR ELEVATION w/out INSECT SCREEN

SCALE: 1/4" = 1'-0"

DELOACHE RESIDENCE

607 KING STREET, BEAUFORT, SC

ALLISON RAMSEY Architects Inc. creating sustainable timeless design
1003 Charles St.
Beaufort SC, 29902
(843) 986-0559
www.allisonramseyarchitect.com

THIS PLAN HAS BEEN PREPARED TO MEET TOP PROFESSIONAL STANDARDS AND PRACTICES. HOWEVER, BUILDING CODES AND ENVIRONMENTAL CONDITIONS VARY FOR DIFFERENT LOCATIONS. IT IS THE RESPONSIBILITY OF THE PURCHASER OF THIS PLAN TO PERFORM THE FOLLOWING BEFORE BEGINNING CONSTRUCTION. ALLISON RAMSEY ARCHITECTS, INC. ASSUMES NO LIABILITY FOR ANY HOME CONSTRUCTED FROM THIS PLAN.

- VERIFY ALL DIMENSIONS PRIOR TO PROCEEDING WITH CONSTRUCTION
- VERIFY COMPLIANCE WITH ALL LOCAL CODES
- PLANS INDICATE LOCATIONS ONLY, ENGINEERING ASPECTS SHOULD INCORPORATE ACTUAL SITE CONDITIONS.
- MAC + PLUMBING LAYOUTS ARE NOT INCLUDED. THESE SHOULD BE OBTAINED FROM A LOCAL MECH. CONTRACTOR OR ENGINEER TO ENSURE COMPLIANCE WITH LOCAL CODE AND THAT EQUIPMENT IS SIZED CORRECTLY FOR YOUR PARTICULAR REGION AND CONDITIONS.
- VERIFY ALL STRUCTURAL ELEMENTS WITH LOCAL ENGINEER AND/OR ARCHITECT.

DATE:	07/11/2022
JOB NO.	20370
DWN. BY:	JW
DWG. NAME:	20220711-20370.DWG

Copyright 2022 by Allison Ramsey Architects, Inc. All rights reserved.

5

PREVIOUS SUBMISSION



4 RIGHT ELEVATION

SCALE: 1/4" = 1'-0"



3 REAR ELEVATION

SCALE: 1/4" = 1'-0"

DELOACHE RESIDENCE

607 KING STREET, BEAUFORT, SC

ALLISON RAMSEY Architects Inc. creating sustainable timeless design
1003 Charles St.
Beaufort SC, 29902
(843) 986-0559
www.allisonramseyarchitect.com

THIS PLAN HAS BEEN PREPARED TO MEET TOP PROFESSIONAL STANDARDS AND PRACTICES. HOWEVER, BUILDING CODES AND ENVIRONMENTAL CONDITIONS VARY FOR DIFFERENT LOCATIONS. IT IS THE RESPONSIBILITY OF THE PURCHASER OF THIS PLAN TO PERFORM THE FOLLOWING BEFORE BEGINNING CONSTRUCTION. ALLISON RAMSEY ARCHITECTS, INC. ASSUMES NO LIABILITY FOR ANY HOME CONSTRUCTED FROM THIS PLAN.

-VERIFY ALL DIMENSIONS PRIOR TO PROCEEDING WITH CONSTRUCTION
-VERIFY COMPLIANCE WITH ALL LOCAL CODES
-PLANS INDICATE LOCATIONS ONLY, ENGINEERING ASPECTS SHOULD INCORPORATE ACTUAL SITE CONDITIONS
-MAC + PLUMBING LAYOUTS ARE NOT INCLUDED. THESE SHOULD BE OBTAINED FROM A LOCAL MECH. CONTRACTOR OR ENGINEER TO ENSURE COMPLIANCE WITH LOCAL CODE AND THAT EQUIPMENT IS SIZED CORRECTLY FOR YOUR PARTICULAR DESIGN AND CONDITIONS.
-VERIFY ALL STRUCTURAL ELEMENTS WITH LOCAL ENGINEER AND/OR ARCHITECT.

DATE:	02/16/2022
JOB NO.	20370
DWN. BY:	BA/ JWA5
DWG. NAME:	20370.DWG

Copyright 2022 by Allison Ramsey Architects, Inc. All rights reserved.

5

PREVIOUS SUBMISSION

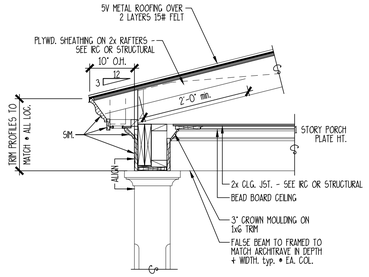

4 **REAR PORCH SECTION**

SCALE: 3/4" = 1'-0"

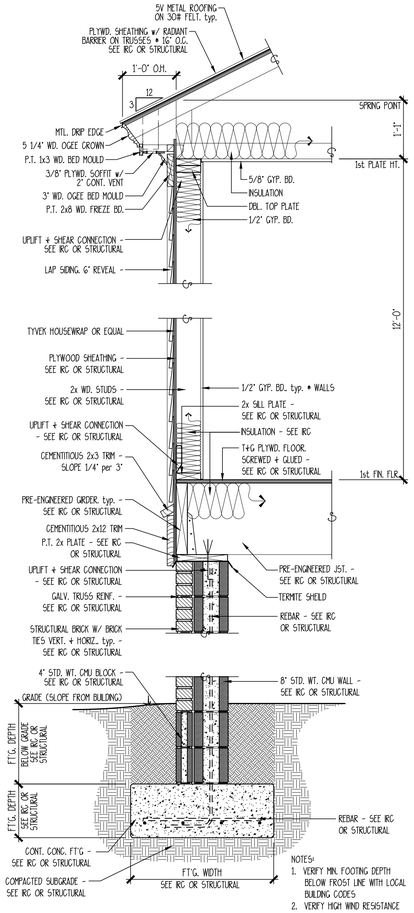

3 **ONE STORY SECTION**

SCALE: 3/4" = 1'-0"

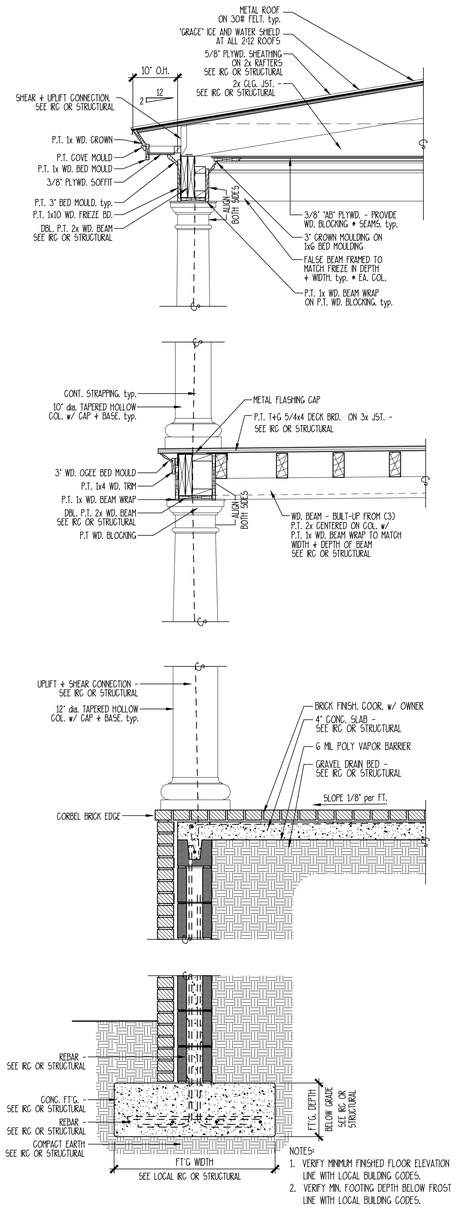

2 **PORCH SECTION**

SCALE: 3/4" = 1'-0"

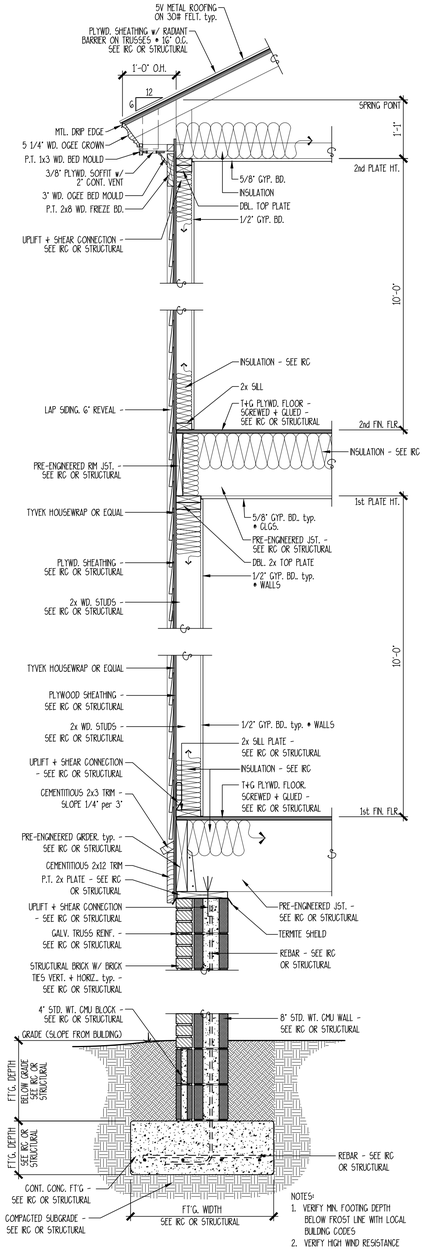

1 **TWO STORY SECTION**

SCALE: 3/4" = 1'-0"

DELOACHE RESIDENCE

607 KING STREET. BEAUFORT, SC

ALLISON RAMSEY Architects llc. creating sustainable timeless design
1003 Charles St.
Beaufort SC. 29902
(843) 986-0559
www.allisonramseyarchitect.com

THIS PLAN HAS BEEN PREPARED TO MEET TYP PROFESSIONAL STANDARDS AND PRACTICES. HOWEVER, BUILDING CODES AND ENVIRONMENTAL CONDITIONS VARY FOR DIFFERENT LOCATIONS. IT IS THE RESPONSIBILITY OF THE OWNER/BUILDER OF THIS PLAN TO DETERMINE THE FOLLOWING BEFORE CONSTRUCTION BEGINS. ALLISON RAMSEY ARCHITECTS INC ASSUMES NO LIABILITY FOR USE OF THIS PLAN IN ANY STATE CONSTRUCTED FROM THIS PLAN.

-VERIFY ALL DIMENSIONS PRIOR TO FABRICATING ANY CONSTRUCTION
-VERIFY COMPLIANCE WITH ALL LOCAL CODES
-PLANS INDICATE LOCATIONS ONLY; ENGINEERING ASPECTS SHOULD INCORPORATE
ALL LOCAL CODES
-HVAC, PLUMBING LAYOUTS ARE NOT INCLUDED. THESE SHOULD BE DESIGNED FROM A LOCAL MECH. CONTRACTOR OR ENGINEER TO ENSURE COMPLIANCE WITH LOCAL CODE
-ARE THE CLIENT'S RESPONSIBILITY TO CONTRACT A LOCAL CONTRACTOR AND OBTAIN ALL PERMITS AS SUCH. ARCHITECT DOES NOT CONTRACT WITH ANY CONTRACTORS.

Copyright 2021 by Allison Ramsey Architects, Inc. All rights reserved.

DATE:	03/16/2021
JOB NO.	20370
DWN. BY:	BA/ JWAS
DWG. NAME:	20210316-20370.DWG

6

BARTLETT TREE EXPERTS
109 INDUSTRIAL VILLAGE ROAD, BEAUFORT SC 29901.(843)986-0233.FAX (843) 524-1079

July 27, 2022

Jeremiah W. A. Smith, Architect
Allison Ramsey Architects, Inc.
1003 Charles Street
Beaufort, SC 29902
Phone: 843-986-0559 Ext: 4
jeremiah@allisonramseyarchitect.com

Re: 18 inch Live Oak, 12 inch Live Oak and 17 inch Water Oak at left property line at 607 King St.

Jeremiah,

Of the three trees you requested I look at in consideration for removal, the two trees that are in direct conflict with the overall health of the proposed house are the 18 inch Live Oak and the 17 inch Water Oak.

The 18 inch Live Oak has a heavy lean toward the middle of the lot which would make it difficult to impossible to build upon this lot. The adjacent smaller 12 inch Live Oak grows 30-40 feet vertical prior to it growing slightly back toward the lot. This smaller Live Oak doesn't seem to be in conflict with the proposed house and can be managed for clearance. Both of these trees are currently healthy and pose a low risk to the property upon construction.

The 17 inch Water Oak at the center of the left property line is an at risk tree. This tree is almost completely dead. It has a history of many branch failures which includes but not limited to the loss of the central leader. Upon the trunk of the tree there is extensive pockets of decay visible. There is currently only 1 living 1.5 inch diameter small branch surviving on this tree. This severely declining Water Oak is also within the proposed footprint of the house. Upon construction the Water Oak poses a High Risk and after construction (due to the frequency of people becoming less frequent on site) the risk would drop to Moderate.

Please contact me with any questions.

Respectfully,

Paul D. Viste
Bartlett Tree Experts
Arborist Representative
Beaufort, SC
ISA Certified Arborist SO 6765-A
Tree Risk Assessment Qualified
Office (843) 986-0233

Historic Review Board Meeting Staff Report

From the Department of Community and Economic Development
10 August 2022

1 Summary of Request

607 King Street, New Construction
Applicant: Bill Allison, Allison Ramsey Architects

The applicant is requesting Preliminary Approval of new construction of a single-family residence at 607 King Street.

Background: This project was first submitted at the April 2022 HRB meeting for preliminary approval, where the Board voted to grant conceptual approval with the applicant to restudy the entrance areas of the project as they relate to the elevator placement and things that may be able to narrow that wing of the building inward.

2 Facts

Property Address:	**607 King Street**
Parcel ID:	R120-004-000-1031-0000
Case Number:	**22-14 HRB.1**
Applicant:	**Bill Allison,** **Allison Ramsey Architects**
Zoning:	T4-N
Use:	Single-Family Residence



District Development Standards for T4-N:

- **Setback requirements – Primary Structure:**
  - *Front-0' min.- 15' max.*
  - *Rear setback – 10' min.*
  - *Side Corner/Alley – 0'min. – 10' max.*
  - *Side Interior – 5' min, or 0' if attached.*
- **Maximum Building Height: 4 stories max;** 3.5 stories max in & fronting Historic District & interior lots along Allison Rd.
- **Frontage Build-Out:** 60% min; 85% max.
- **Impervious Surface Coverage:** 70% maximum for rooftops, additional 10% allowed.

References:

- The Beaufort Code
- The Beaufort Preservation Manual
- The Beaufort Preservation Manual Supplement

3 STAFF COMMENTS

Staff Acknowledgements:

A. Staff supports the change to move the kitchen window on the south façade further away from the corner.

B. Staff supports the change to move the elevator behind the first floor keeping room.

C. Staff supports the measures made by the applicant to simplify the jogs in the building.

D. Staff supports the applicants use of metal railings on the front porch and entry stair as a way to differentiate this new construction from more historic precedents.

Staff Conditions:

1. Staff recommends the applicant adjust the front elevation second floor porch transoms over windows and door. As drawn the divided lite of the transom does not have four equal lites and presents a horizontal proportion. Staff recommends the applicant consider equal lite sizing of the transom.

2. Staff recommends the applicant lengthen the height of first floor windows within the Den/Bedroom 2 and Keeping Room. First floor windows should be at least as tall, if not taller, than second floor windows.

3. As designed, the northern most window in the Den/Bedroom 2 and Keeping room does not align with the northern most window in second floor rooms; Bedroom 3 and Bedroom 4. These windows should align.

4. Staff recommends the applicant consider eliminating shutters from the design.

5. Staff recommends the applicant reconfigure bathroom 3 (second floor east side) so that shower, toilet, and vanity are located to interior wall adjoining the sitting room. This will allow the window within this bathroom to be sized to match those in the bedrooms and spaced more feely within the bathroom to be symmetrical about the roof ridge.

6. Staff recommends the applicant reconfigure bathroom 3 (second floor west side) so that toilet and vanity are located to interior wall adjoining bedroom 4. This will allow the window within this bathroom to be sized to match those in the bedrooms and spaced more freely within the bathroom to be symmetrical about the roof ridge.

7. Staff recommends the applicant add a window to both walk-in closets on east and west elevations to be symmetrical about the roof ridge with southernmost windows in the bedrooms.

8. Staff recommends that all windows on second floor east and west elevations are the same width and height and symmetrically placed within the elevations (taking into consideration comments 5, 6, and 7). In addition, staff recommends that the second-floor windows (east and west elevations) are widened from a “20” dimension to a “24” or “28” dimension as they appear too thin. Further, staff recommends the applicant widen the first-floor windows within the Den/Bedroom 2 and Keeping Room (west and east elevations) for same reason mentioned above in this comment.

9. Staff recommends the applicant add brick arch surrounds to the archways within the front porch. Arch surrounds may be set slightly proud of the surrounding brick.
10. Staff recommends the applicant simplify the porch columns and possibly consider square columns rather than round tapered.
11. Staff recommends the applicant consider the enlarging the width of the front porch columns.
12. Staff recommends the applicant simplify the profiles of crown molding elements at cornice, frieze, and porch beam lines.
13. Staff recommends the applicant remove the cantilevered portion of the rear porch access stair as it projects over the setback line.

STAFF RECOMMENDATION:

Preliminary Approval with Conditions Noted

CITY STAFF INTRODUCTION

407/409 Laurens Street

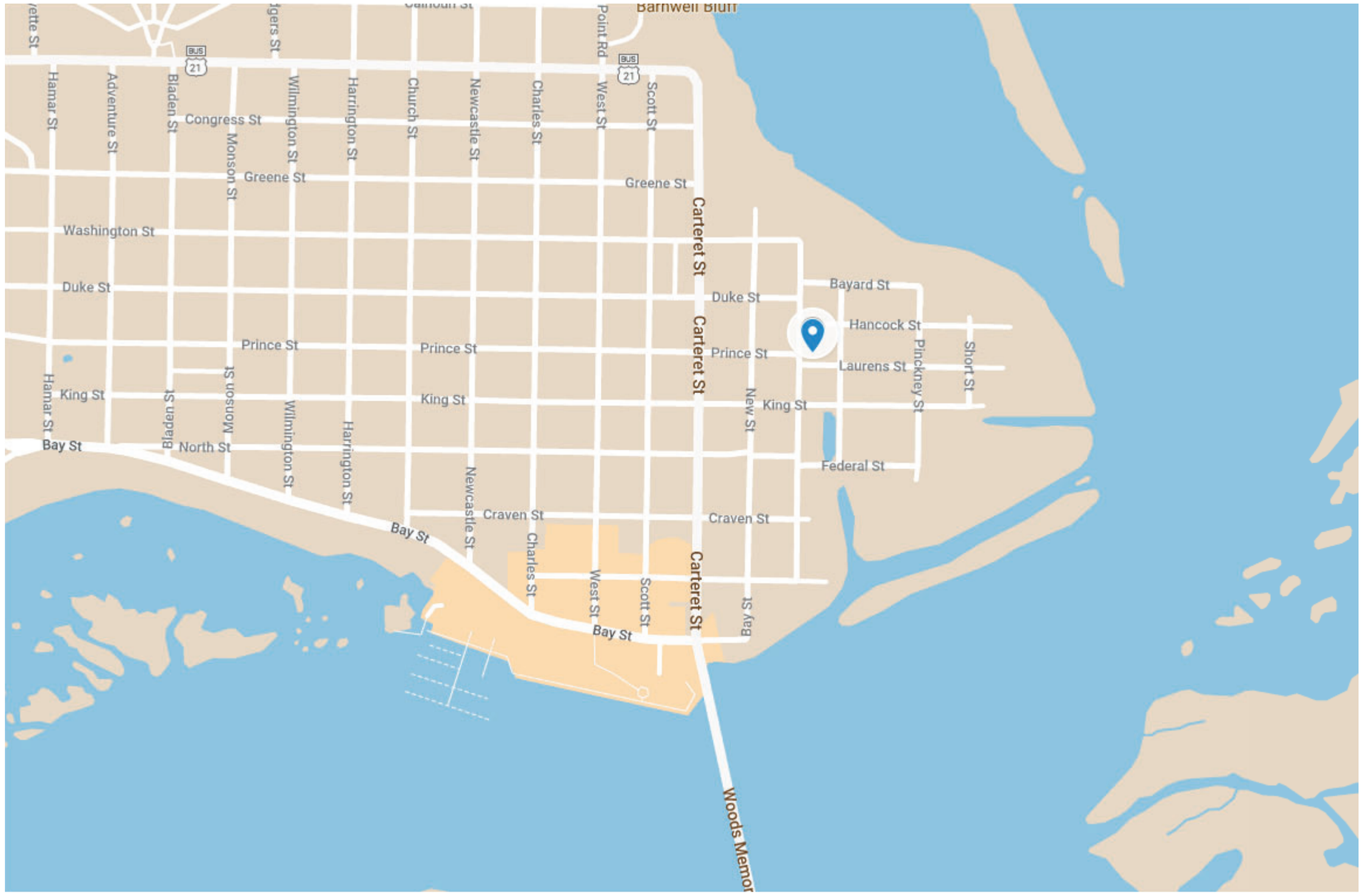
Barnwell Bluff
Point Rd
Scott St
West St
Charles St
Newcastle St
Church St
Harrington St
Wilmington St
Monson St
Bladen St
Adventure St
Hamar St
Congress St
Greene St
Washington St
Duke St
Prince St
King St
Bay St
North St
Craven St
Carteret St
Bayard St
Hancock St
Laurens St
Pinckney St
Short St
New St
Federal St
Woods Memor




YAMAHA





407/409 Laurens Street 6 of 21



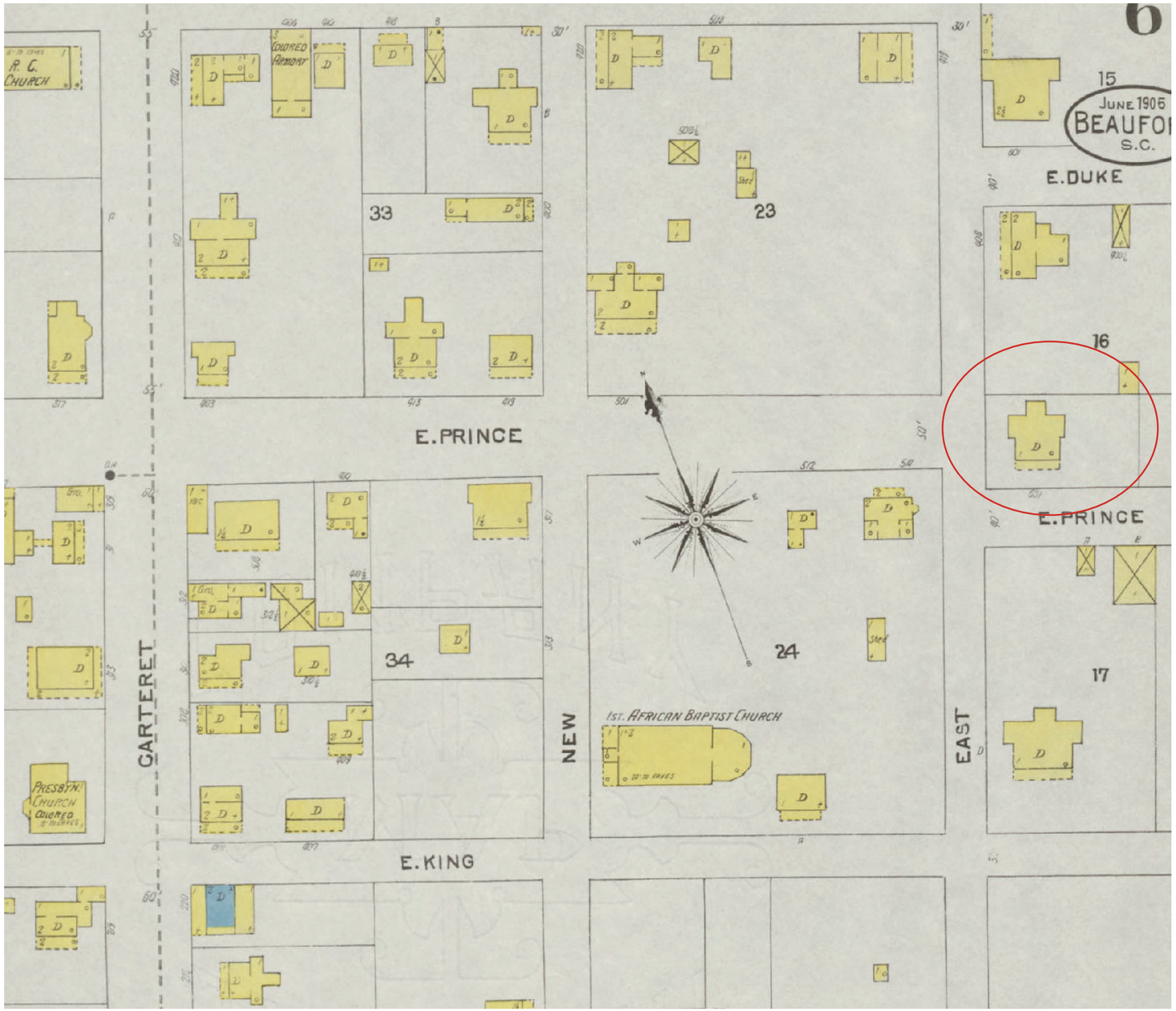

1905 Sanborn Map - 409 Laurens Street

407/409 Laurens Street 8 of 21

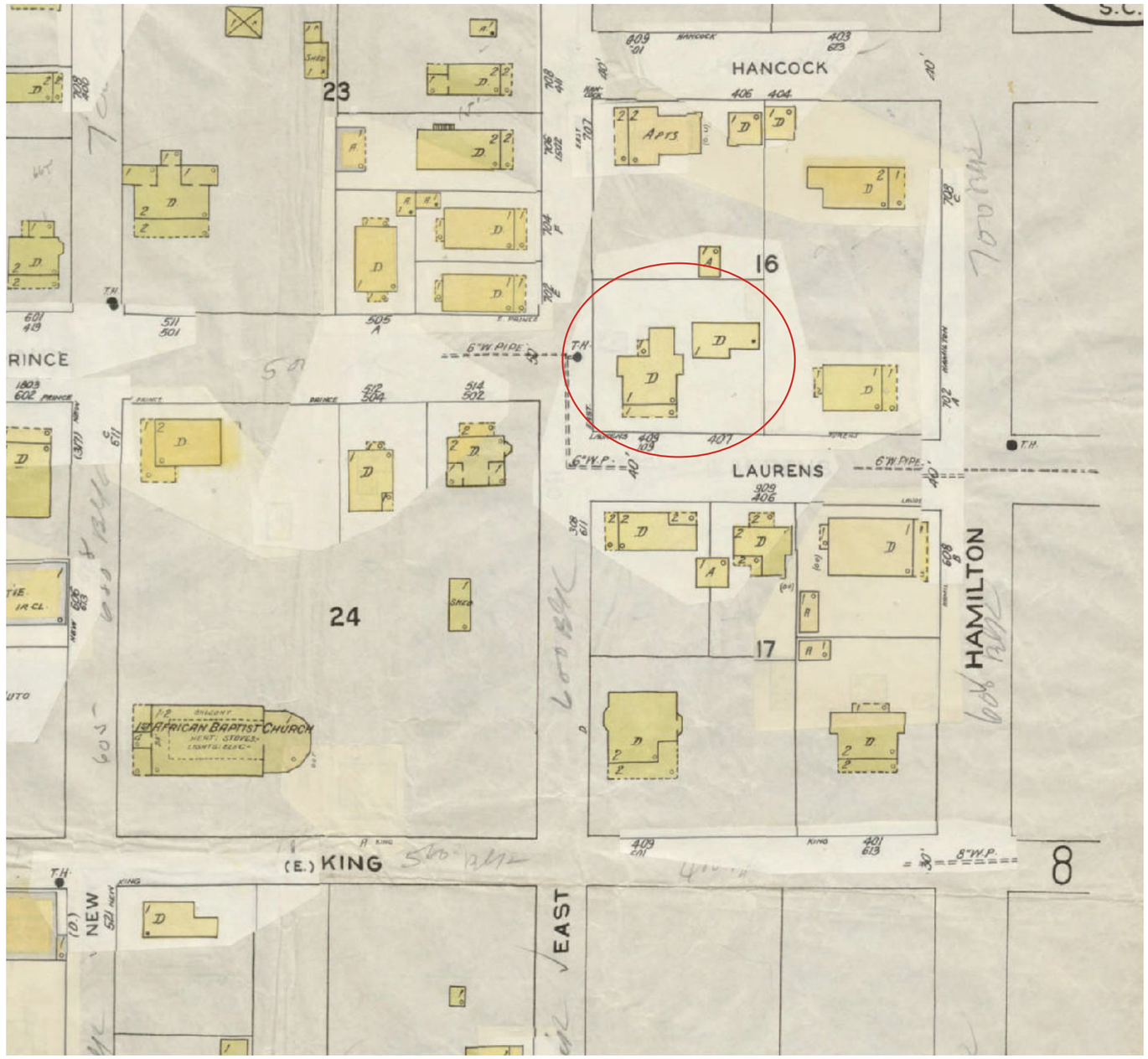

1952 Sanborn Map - 409/407 Laurens Street

APPLICANT PRESENTATION

407/409 Laurens Street

(2)

✓ Meadors 7/18

22-51 HRB.1

DEVELOPMENT REVIEW PROCESS
HISTORIC REVIEW APPLICATION

Community & Economic Development Department
1911 Boundary Street, Beaufort, South Carolina, 29902
p. (843) 525-7011 / f. (843) 986-5606
Email: development@cityofbeaufort.org /www.cityofbeaufort.org

☐ Staff Review
☑ Board Review

Application Fee:
see attached schedule

OFFICE USE ONLY: **Date Filed:** 7/13 **Application #:** 24022 **Zoning District:** T4-HN
BCAGHS Survey: ☑ Yes ☐ No

Schedule: The Historic Review Board (HRB) typically meets the 2nd Wednesday of each month at 2pm. The complete schedule, along with the list of deadlines, may be found here - http://www.cityofbeaufort.org/historic-review-board.aspx

Submittal Requirements: All forms and information shall be submitted digitally + 5 hardcopies of all documents. In addition to a complete application form, applicants shall submit the required items according to the checklists on the subsequent page.

Review Request: ☐ Conceptual ☐ Preliminary ☑ Final ☐ Bailey Bill Approval* ☐ Change After Certification
**Requires a Bailey Bill – Part A Preliminary Review Application Form*

Pursuant to Section 6-29-1145 of the South Carolina Code of Laws, is this tract or parcel restricted by any recorded covenant that is contrary to, conflicts with, or prohibits the activity described in this application? ☐ Yes ☑ No

Applicant, Property, and Project Information

Applicant Name: BRADFORD FLEMING

Applicant Address: 409 LAURENS ST

Applicant E-mail: fleming.bradford@gmail.com Applicant Phone Number: 508 221 0688

Applicant Title: ☑ Homeowner ☐ Tenant ☐ Architect ☐ Engineer ☐ Developer

Owner (if other than the Applicant):

Owner Address:

Project Name:

Property Address: 409 LAURENS ST + 407 Laurens - Cottage

Property Identification Number *(Tax Map & Parcel Number)*: R120 004 000 0567 0000

Date Submitted: 7/13/22

Certification of Correctness: I/we certify that the information in this application is correct.

Applicant's Signature: [signature] Date: 7/13/22

Owner's Signature: Date:

(The owner's signature is required if the applicant is not the owner.)

DEVELOPMENT REVIEW PROCESS
HISTORIC REVIEW APPLICATION

Community & Economic Development Department
1911 Boundary Street, Beaufort, South Carolina, 29902
p. (843) 525-7011 / f. (843) 986-5606
Email: development@cityofbeaufort.org / www.cityofbeaufort.org

Project Name: 409 LAURENS ST

Property Size in Acres: 1/4 Proposed Building Use: RESIDENTIAL

Nature of Work (check all that apply):

☐ New Construction, Primary Structure ☐ New Construction, Primary Structure ☑ Alterations / Additions

☐ Demolition* ☐ Relocation* **Demolition and Relocation requires a public hearing*

Building Square Footage (if multiple buildings, please list each one and their square footage by floor):

Is this project a redevelopment project: ☐ Y ☑ N

Are there existing buildings on the site? ☑ Y ☐ N if yes, will they remain? ☑ Y ☐ N

Provide a brief Project Narrative (if requesting Bailey Bill Approval, this section may be left blank):

CHANGE SASH + EXTERIOR DOORS FROM WHITE TO CHARLESTON GREEN

CONTACT INFORMATION –

Attention: Julie A. Bachety, Administrative Assistant II
Community & Economic Development Department
1911 Boundary Street, Beaufort, South Carolina 29902
E-Mail: development@cityofbeaufort.org Phone: (843) 525-7011 | Fax: (843) 986-5606

Revised June 10, 2021

HISTORIC DISTRICT REVIEW
CERTIFICATE OF APPROPRIATENESS

Application Requirements

The Beaufort Code applies to all projects; the Historic District Infill Design Guidelines in Section 4.7 apply to new construction in the Historic District.

The Historic Review Board also utilizes the following documents when evaluating projects:

- *The Beaufort Preservation Manual* & *Supplement:* these standards apply to New Construction, Alterations and Additions to Contributing Structures, and Demolition located everywhere in the Historic District except the Northwest Quadrant.
- *The Northwest Quadrant Design Guidelines:* these standards apply to New Construction, Alterations and Additions to Contributing Structures, and Demolition located in the Northwest Quadrant of the Historic District
- The Secretary of the Interior's *Standards for Rehabilitation:* these standards apply to all modifications to Contributing Structures throughout the Historic District

All documents can be found online at www.cityofbeaufort.org

- The Beaufort Code can be found here: http://www.cityofbeaufort.org/434/Zoning
- Documents specific to the Historic District, a map of the Historic District and neighborhoods, and the list of Contributing and Non-Contributing Structures can be found here: http://www.cityofbeaufort.org/350/1997-Beaufort-County-Historic-Sites-Surv

NOTE 1: If a New Construction project also requires major demolition a separate application is required. (Refer to the Checklist for Demolition on page 3).

NOTE 2: Applications will not be considered complete until all the required items have been submitted. Incomplete applications will not be placed on the agenda.

NOTE 3: Applications are to be compiled in the order in which the applicant plans to present the application to the Board during the meeting.

407/409 Laurens Street 13 of 21

Submission Requirements for New Construction and Alterations or Additions

Please submit DIGITAL FILES ONLY via email to: development@cityofbeaufort.org

*Initial submittals should show existing and proposed conditions. For all subsequent submittals, architectural drawings should show and clearly label existing conditions, the previous proposal, and the current proposed. Each version of the same drawing should be adjacent to the others in the application for easy review.

***This Application Requirements Checklist MUST be included in applications, with submitted items checked.**

Conceptual Review

- ☑ **Existing Context:** Color photographs of the existing structure and the adjacent structures.
- ☐ **Plat:** A plat indicating the tax map and parcel number, existing structure(s), setbacks, existing trees, and proposed construction footprint.
- ☐ **Site Plan:** A site plan, to scale, indicating the location of the existing structure on the lot, proposed new structure, any site modifications (parking, paths, landscaping, tree removal, etc…), any new or existing mechanical equipment and screening area, and percentage of the total impervious paving. The plan should also include any connections to the public right of way (street and/or sidewalk), and grade elevations of the street and/or sidewalk and the proposed construction at the first floor.
- ☐ **Design:** One or more drawings that convey the intent of the proposal. This may include: floor plans, elevations, and building sections. They should display massing and scale of new construction and how it relates to the existing structure or surrounding context. For new construction and additions, this drawing should include a street elevation and/or a street section showing height and width relationships to existing adjacent buildings.
- ☐ **3-D Rendering:** A 3-D rendering, or physical scale model, showing the height, mass and scale of the proposed building in its context is required for all structures except single-family and 2-3 unit residential buildings.
- ☐ **Pre-Application Conference:** A Pre-application conference is required for all commercial new construction and substantial commercial renovation projects. The requirement for an Archeological Impact Assessment will be determined at this meeting.

Preliminary Review: All the documents required for Conceptual Review, PLUS:

- ☐ **Floor Plans:** Proposed floor plans of all levels of the building, including square footage. For Alterations or Additions, existing conditions drawings of the floor plan are also required, showing the area and square footage affected by the addition.
- ☐ **Elevations:** Elevation drawings of all sides of the building, including heights – height above grade, floor-to-floor heights, eave height and ridge height (if applicable). For Alterations or Additions, existing conditions drawings of all four elevations are also required.
- ☐ **Color Rendering:** A colored version of at least one elevation, noting proposed materials and colors.
- ☐ Additional on-site representation, such as a height story pole, and corner staking of the foundation, may be required.
- ☐ A Certified Arborist report may be required if grand trees are affected by the project.

Final Review: All the documents required for Preliminary Review, PLUS:

- ☐ **Details:** A typical wall section(s), window details, door details, eave details, porch details, and any other details characteristic to the building are required.
- ☑ **Material Samples and Cut Sheets:** Applicant to submit cut sheets for all exterior building materials, to include roof and typical roof details, doors, windows, dryer vents, exterior lighting, etc. Samples of windows, lighting and building materials may be required at Staff's discretion.
- ☑ **Final Materials List:** A final list, including colors, is required.
- ☐ **Landscaping Plan:** A landscaping plan is required for commercial projects. It shall include a schedule detailing materials and colors of all plants and landscape materials, all existing trees, with the trees to be removed noted, existing and proposed grading, and any exterior lighting proposed.

Submission Requirements for Change After Certification

Please submit DIGITAL FILES ONLY via email to: development@cityofbeaufort.org

Change After Certification:

- ☐ **Copy of Certificate of Appropriateness** received with previous approval.
- ☐ **Previously Approved Drawings:** Applicant to submit **complete** set of previously approved documents. Current proposed documents to be interlaced between previously approved documents and must be formatted to match previously approved. For example, previously approved elevations should be followed by current proposed. Drawings to be clearly noted as "Previously Approved" or "Current Proposed", and all proposed revisions in the current proposed drawings must be clouded and noted.

Submission Requirements for Demolition or Relocation

Please submit DIGITAL FILES ONLY via email to: development@cityofbeaufort.org

Note: A public hearing must be held for Demolition or Relocation. All notification requirements must be met by the City.

- ☐ A written statement describing the history of the architectural significance of the structure to be demolished, the structural or physical condition of the structure, and the proposed use of the site after demolition or relocation. The statement should also include any recent attempt(s) to sell the property, or move the structure. A recent appraisal with comparisons is strongly encouraged. You may refer to *The Beaufort County Above Ground Resources Survey of 1997,* or consult city staff or the Historic Beaufort Foundation for verification of the date of constructionand historic information.
- ☐ Tax map or plat showing the location of the property
- ☐ Color photographs of all sides of the structure.
- ☐ Color photographs of adjoining properties.
- ☐ A written report by an engineer, regarding the structural condition of the building, is required ifthe reason for demolition is related to the structural integrity of the building.

HISTORIC DISTRICT REVIEW BOARD
FEE SCHDULE

(As of July 1, 2020)

BOARD REVIEW FEES:

Single-family residential projects (board review)	$100.00
Multifamily and commercial projects (board review)	$250.00
Change After Certification	$100.00
Demolition (whole structure)	$250.00
Special Board Meeting	$500.00

Post facto applications shall be triple the normal fee.

STAFF REVIEW FEES:

Single Family and 2/3-unit buildings not in a historic district are exempt.

Type 1

Renovations/Improvements (not including additions), ≤ 50% of the value of the structures

Value	Fee
Improvements ≤ $5,000	$50
Improvements > $5,000 but ≤ $25,000	$50 + 0.25% x value above $5,000
Improvements > $25,000	$100 + 0.20% x value above $25,000

Type 2

- Any single-family and 2/3-unit residential addition in a historic district: $50
- All other additions: $500 base fee + $0.05/square foot of addition.

Type 3

Review for new construction and for renovations/improvements totaling over 50% of the value of the structure:

- Single-family and 2-3 unit residential in the historic district
- ≤ 10,000 square feet: $500 base fee + 0.05/square foot of building

- > $10,000 square feet: $1,000 base fee + $0.05/square foot of building for the first 100,000 square feet of building. For additional square footage over 100,000, $0.02/square foot.



409 from East St.2

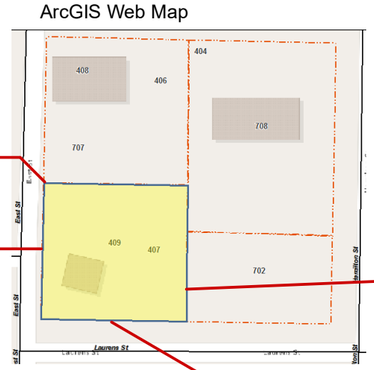



409 Laurens St.2



409 from East St.1

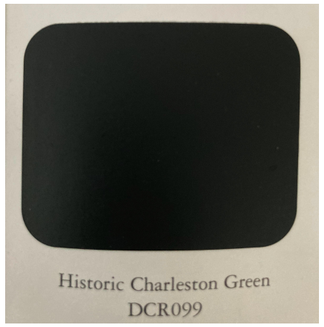



409 Laurens St.1

	FLEMING 407-409 Laurens Street Beaufort, SC., 29902 ELEVATIONS		HRB SUBMISSION: PAINT CHAMGE Property ID: R120 004 000 0567 000 Scale: As Noted	7/18/22		A-1



702 East St



Pretty Penny 504 Prince St

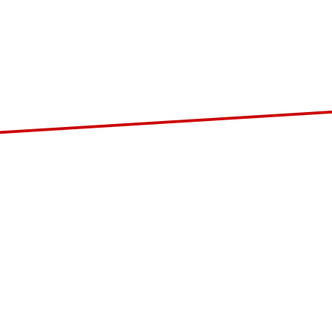

ArcGIS Web Map

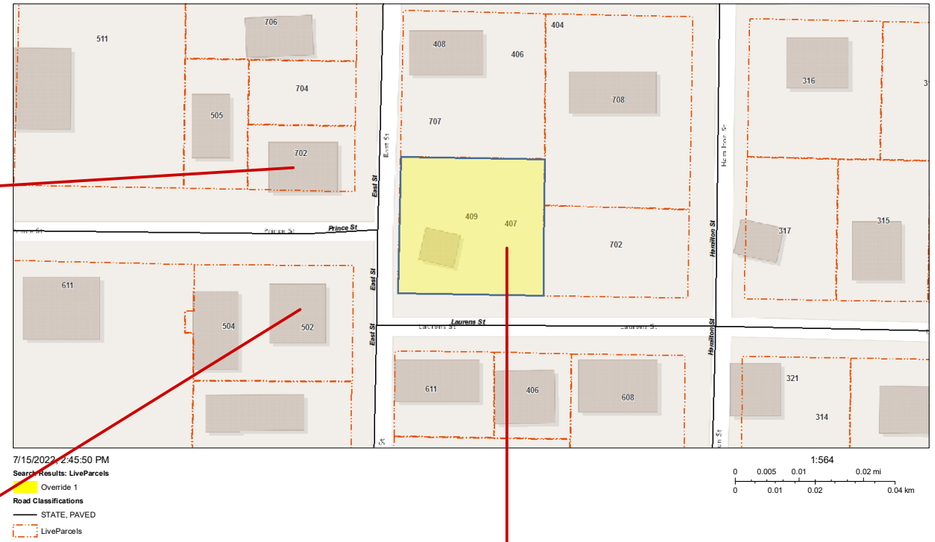



407 Laurens St. Cottage

	FLEMING 407-409 Laurens Street Beaufort, SC., 29902 ELEVATIONS		HRB SUBMISSION: PAINT CHAMGE Property ID: R120 004 000 0567 000 Scale: As Noted	7/18/22		A-2

Historic Review Board Meeting Staff Report

From the Department of Community and Economic Development
10 August 2022

1 Summary of Request

407/409 Laurens Street, Alterations
The applicant is requesting final approval for alterations to a single-family residence at 407 and 409 Laurens Street.

This property is in the Historic Preservation Neighborhood.

Background: This is the first application received for this project.

2 Facts

Property Address:	407/409 Laurens Street
Parcel ID:	R120 004 000 0567 0000
Case Number:	22-51 HRB.1
Applicant:	**Bradford Fleming, Homeowner**
Zoning:	T4-HN
Use:	Single Family Dwelling

District Development Standards for T4-HN:

- **Setback requirements – Primary Structure:**
  - *Front —Average prevailing setback on block*
  - *Rear setback – 15' min.*
  - *Side Corner/Alley – 5'min.*
  - *Side Interior – 6'min., 10' min. in The Point*
- **Lot Width at Front Setback:** 40' min., 60' min. in The Point
- **Lot Size:** 4,000 sf min., 6,000 sf min. in The Point
- **Impervious Surface Coverage***:* 55% maximum for rooftops, additional 10% allowed for total impervious coverage.
- **Frontage Build-Out:** 75% max.
- **Maximum Building Height:** 3 stories max.

References:

Beaufort Code
Beaufort Preservation Manual
Beaufort Preservation Manual Supplement
Secretary of the Interior's Standards for Treatment of Historic Properties

3 STAFF COMMENTS

Staff Acknowledgements

A. 409 Laurens Street is a one-story frame building on a raised masonry foundation, and 407 Laurens Street is a one-story frame building set on a lower raised foundation, both owned by the applicant requesting the same paint changes.

B. 409 Laurens Street is listed as neither a contributing nor noncontributing structure but dates to at least 1905 as evidenced by Sanborn maps. 407 Laurens Street is listed on the noncontributing resource list with a construction date circa 1960.

C. The applicant is requesting to paint all exterior doors and all window sashes on both structures Charleston green.

Staff Conditions

1. Staff supports the applicant's request to paint the doors Charleston green but does not support the request to paint the exterior sashes Charleston green. Staff recommends that the window sashes stay their current white color or repainted a more appropriate color such as a light gray.

STAFF RECOMMENDATION:

Approval of the exterior door paint. Denial of the window sash paint.

CITY STAFF INTRODUCTION

606 Carteret Street

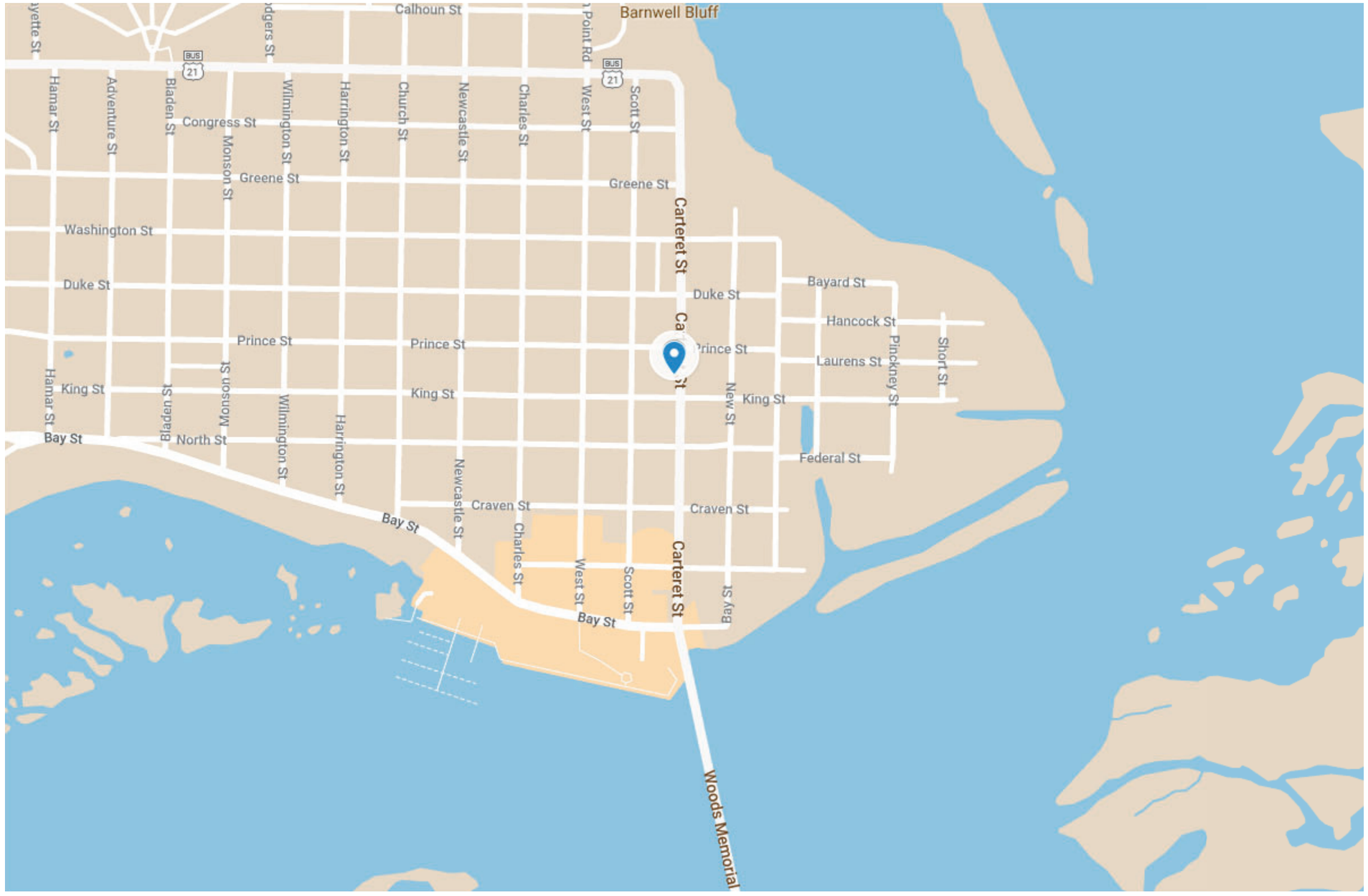

606 Carteret 2 of 121





606 Carteret 4 of 121



606 Carteret 5 of 121

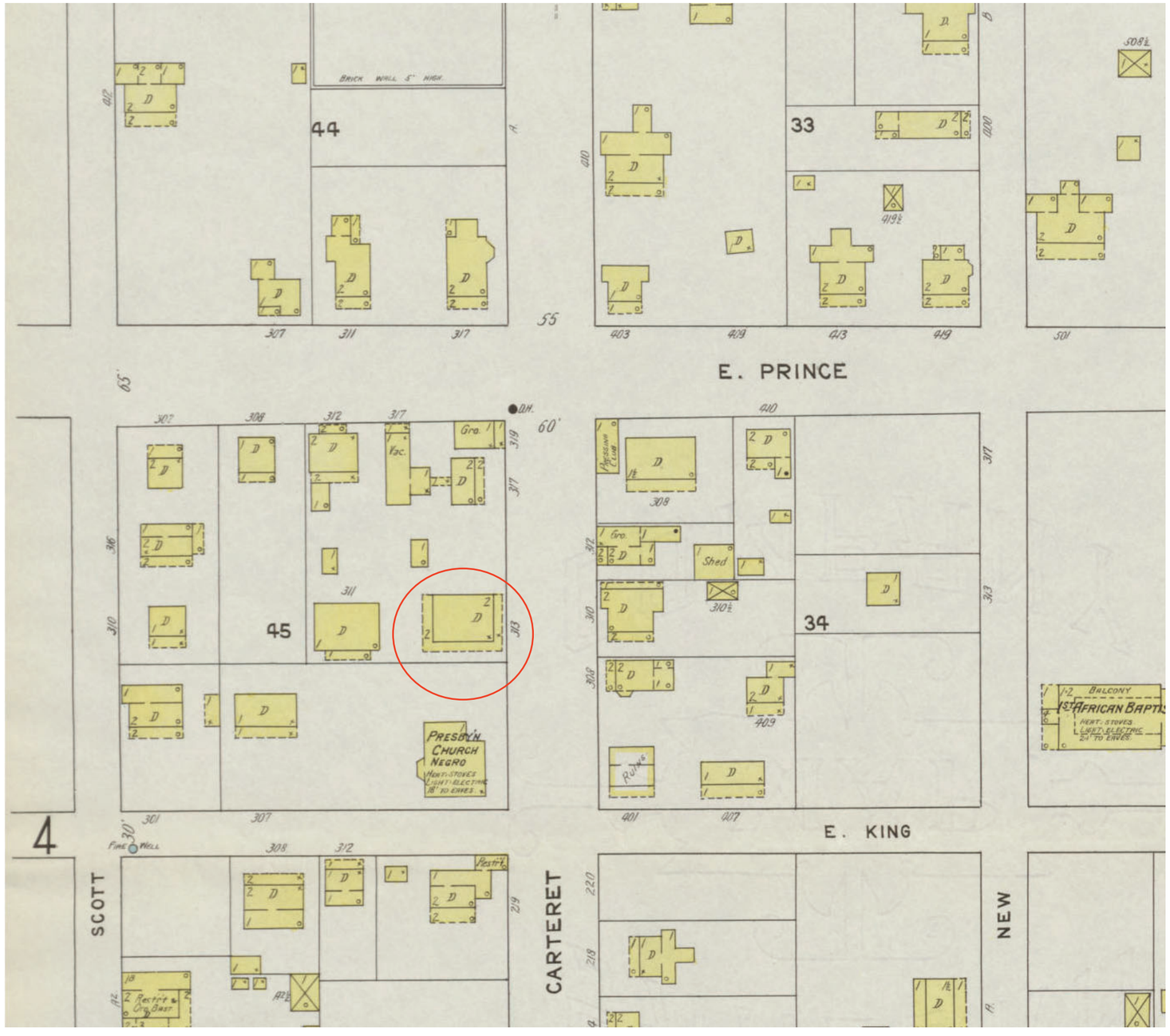

1912 Sanborn Map - 606 Carteret Street

606 Carteret 6 of 121

APPLICANT PRESENTATION

606 Carteret Street

(3)

√Meadors 7/18

22-52 HRB1

DEVELOPMENT REVIEW PROCESS
HISTORIC REVIEW APPLICATION
Community & Economic Development Department
1911 Boundary Street, Beaufort, South Carolina, 29902
p. (843) 525-7011 / f. (843) 986-5606
Email: development@cityofbeaufort.org /www.cityofbeaufort.org

☐ Staff Review
☒ Board Review

Application Fee:
see attached schedule

OFFICE USE ONLY: **Date Filed:** 7/18 **Application #:** 24027 **Zoning District:** T4-N
BCAGHS Survey: ☒ Yes ☐ No

Schedule: The Historic Review Board (HRB) typically meets the 2nd Wednesday of each month at 2pm. The complete schedule, along with the list of deadlines, may be found here - http://www.cityofbeaufort.org/historic-review-board.aspx

Submittal Requirements: All forms and information shall be submitted digitally + 5 hardcopies of all documents. In addition to a complete application form, applicants shall submit the required items according to the checklists on the subsequent page.

Review Request: ☐ Conceptual ☐ Preliminary ■ Final ☐ Bailey Bill Approval* ☐ Change After Certification
**Requires a Bailey Bill – Part A Preliminary Review Application Form*

Pursuant to Section 6-29-1145 of the South Carolina Code of Laws, is this tract or parcel restricted by any recorded covenant that is contrary to, conflicts with, or prohibits the activity described in this application? ☐ Yes ☐ No

Applicant, Property, and Project Information

Applicant Name: ~~Brad Allen Amerell DBA~~ Summerall Custom Construction

Applicant Address: 11 Professional Village Circle Beaufort SC 29907

Applicant E-mail: office@summerallcc.com Applicant Phone Number: 843-986-4986

Applicant Title: ☐ Homeowner ☐ Tenant ☐ Architect ☐ Engineer ☐ Developer

Owner (if other than the Applicant): Berman Properties

Owner Address: 22 Sea Gull Beaufort SC 29907

Project Name: 606 Carteret

Property Address: 606 Carteret Street Beaufort SC

Property Identification Number *(Tax Map & Parcel Number)*: R120 004 000 0628 0000

Date Submitted: 07/14/2022

Certification of Correctness: I/we certify that the information in this application is correct.

Applicant's Signature: Brad Amerell Date: 7-14-22

Owner's Signature: [signature] Date: 7/14/2022

(The owner's signature is required if the applicant is not the owner.)

DEVELOPMENT REVIEW PROCESS
HISTORIC REVIEW APPLICATION

Community & Economic Development Department
1911 Boundary Street, Beaufort, South Carolina, 29902
p. (843) 525-7011 / f. (843) 986-5606
Email: development@cityofbeaufort.org / www.cityofbeaufort.org

Project Name: 606 Carteret

Property Size in Acres: 0.14 Proposed Building Use: Apartments

Nature of Work (check all that apply):

☐ New Construction, Primary Structure ☐ New Construction, Primary Structure ■ Alterations / Additions

☐ Demolition* ☐ Relocation* **Demolition and Relocation requires a public hearing*

Building Square Footage (if multiple buildings, please list each one and their square footage by floor):
Dwelling - 1292 Detached Garage - 352

Is this project a redevelopment project: ☑ Y ☐ N

Are there existing buildings on the site? ☑ Y ☐ N if yes, will they remain? ☑ Y ☐ N

Provide a brief Project Narrative (if requesting Bailey Bill Approval, this section may be left blank):
Please see attached

CONTACT INFORMATION –

Attention: Julie A. Bachety, Administrative Assistant II
Community & Economic Development Department
1911 Boundary Street, Beaufort, South Carolina 29902
E-Mail: development@cityofbeaufort.org Phone: (843) 525-7011 | Fax: (843) 986-5606

Revised June 10, 2021

HISTORIC DISTRICT REVIEW
CERTIFICATE OF APPROPRIATENESS

Application Requirements

The Beaufort Code applies to all projects; the Historic District Infill Design Guidelines in Section 4.7 apply to new construction in the Historic District.

The Historic Review Board also utilizes the following documents when evaluating projects:

- *The Beaufort Preservation Manual* & *Supplement:* these standards apply to New Construction, Alterations and Additions to Contributing Structures, and Demolition located everywhere in the Historic District except the Northwest Quadrant.
- *The Northwest Quadrant Design Guidelines:* these standards apply to New Construction, Alterations and Additions to Contributing Structures, and Demolition located in the Northwest Quadrant of the Historic District
- The Secretary of the Interior's *Standards for Rehabilitation:* these standards apply to all modifications to Contributing Structures throughout the Historic District

All documents can be found online at www.cityofbeaufort.org

- The Beaufort Code can be found here: http://www.cityofbeaufort.org/434/Zoning
- Documents specific to the Historic District, a map of the Historic District and neighborhoods, and the list of Contributing and Non-Contributing Structures can be found here: http://www.cityofbeaufort.org/350/1997-Beaufort-County-Historic-Sites-Surv

NOTE 1: If a New Construction project also requires major demolition a separate application is required. (Refer to the Checklist for Demolition on page 3).

NOTE 2: Applications will not be considered complete until all the required items have been submitted. Incomplete applications will not be placed on the agenda.

NOTE 3: Applications are to be compiled in the order in which the applicant plans to present the application to the Board during the meeting.

606 Carteret 10 of 121

Submission Requirements for New Construction and Alterations or Additions

Please submit DIGITAL FILES ONLY via email to: development@cityofbeaufort.org

*Initial submittals should show existing and proposed conditions. For all subsequent submittals, architectural drawings should show and clearly label existing conditions, the previous proposal, and the current proposed. Each version of the same drawing should be adjacent to the others in the application for easy review.

***This Application Requirements Checklist MUST be included in applications, with submitted items checked.**

Conceptual Review

- ☐ **Existing Context:** Color photographs of the existing structure and the adjacent structures.
- ☐ **Plat:** A plat indicating the tax map and parcel number, existing structure(s), setbacks, existing trees, and proposed construction footprint.
- ☐ **Site Plan:** A site plan, to scale, indicating the location of the existing structure on the lot, proposed new structure, any site modifications (parking, paths, landscaping, tree removal, etc…), any new or existing mechanical equipment and screening area, and percentage of the total impervious paving. The plan should also include any connections to the public right of way (street and/or sidewalk), and grade elevations of the street and/or sidewalk and the proposed construction at the first floor.
- ☐ **Design:** One or more drawings that convey the intent of the proposal. This may include: floor plans, elevations, and building sections. They should display massing and scale of new construction and how it relates to the existing structure or surrounding context. For new construction and additions, this drawing should include a street elevation and/or a street section showing height and width relationships to existing adjacent buildings.
- ☐ **3-D Rendering:** A 3-D rendering, or physical scale model, showing the height, mass and scale of the proposed building in its context is required for all structures except single-family and 2-3 unit residential buildings.
- ☐ **Pre-Application Conference:** A Pre-application conference is required for all commercial new construction and substantial commercial renovation projects. The requirement for an Archeological Impact Assessment will be determined at this meeting.

Preliminary Review: All the documents required for Conceptual Review, PLUS:

- ☐ **Floor Plans:** Proposed floor plans of all levels of the building, including square footage. For Alterations or Additions, existing conditions drawings of the floor plan are also required, showing the area and square footage affected by the addition.
- ☐ **Elevations:** Elevation drawings of all sides of the building, including heights – height above grade, floor-to-floor heights, eave height and ridge height (if applicable). For Alterations or Additions, existing conditions drawings of all four elevations are also required.
- ☐ **Color Rendering:** A colored version of at least one elevation, noting proposed materials and colors.
- ☐ Additional on-site representation, such as a height story pole, and corner staking of the foundation, may be required.
- ☐ A Certified Arborist report may be required if grand trees are affected by the project.

Final Review: All the documents required for Preliminary Review, PLUS:

- ☐ **Details:** A typical wall section(s), window details, door details, eave details, porch details, and any other details characteristic to the building are required.
- ☐ **Material Samples and Cut Sheets:** Applicant to submit cut sheets for all exterior building materials, to include roof and typical roof details, doors, windows, dryer vents, exterior lighting, etc. Samples of windows, lighting and building materials may be required at Staff's discretion.
- ☐ **Final Materials List:** A final list, including colors, is required.
- ☐ **Landscaping Plan:** A landscaping plan is required for commercial projects. It shall include a schedule detailing materials and colors of all plants and landscape materials, all existing trees, with the trees to be removed noted, existing and proposed grading, and any exterior lighting proposed.

606 Carteret St

Proposed exterior repairs

1 June 2022

Siding

- Pine lap siding to be repaired/replace with same species of wood and same style siding to match original condition. Siding to be painted same yellow color to match original.



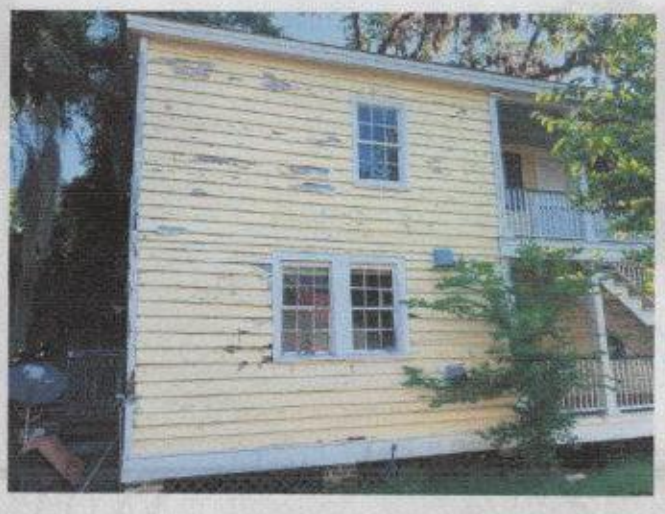



Decking/Stairs

- Decking boards, stairs, banisters and stringers to be repaired/replaced with same species of wood (pine) and the same style (e.g. tongue & groove deck boards etc.)

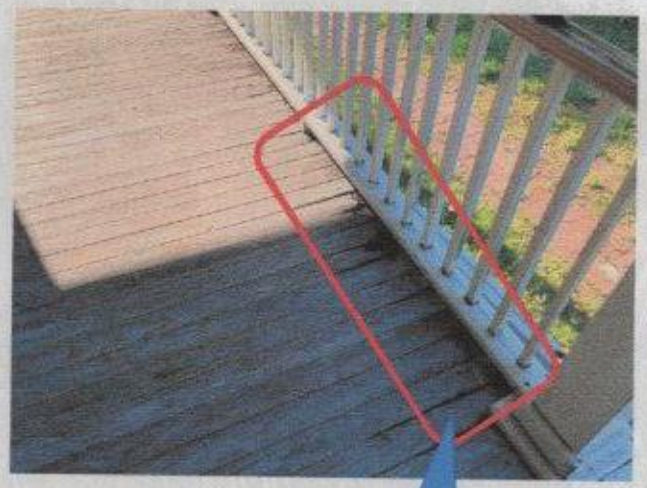





Windows

- Almost all original windows are painted shut and not functional. Many of the frames are rotted and in disrepair. This presents aesthetic and safety concerns. We'd like to replace all windows with the same species of wood window (pine), but ensure they're functional and up to code (i.e. DP rating, UV rating, etc.).



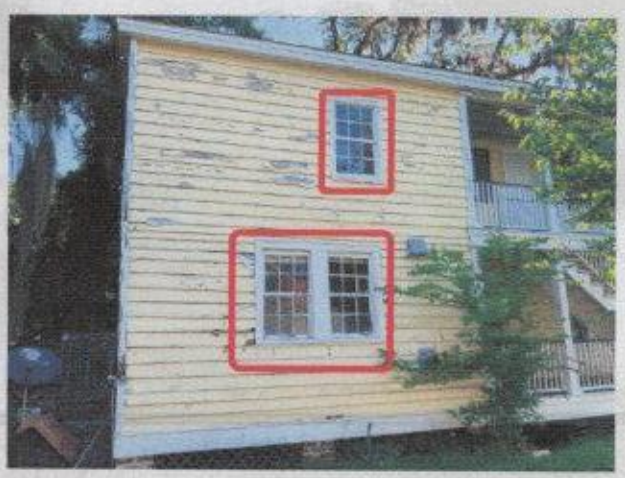



BERMAN PROPERTY GROUP

606 Carteret St

Restoration Proposal

11 July 2022

TABLE OF CONTENTS

1. Exterior Renovation (concept)
2. Exterior/Concept photos
3. Window photos
4. Exterior color choices

1. Exterior Renovation (concept)

Siding

- Pine lap siding to be repaired/replace with same species of wood and same style siding to match original condition. Siding to be painted same yellow color to match original.







Decking/Stairs

- Decking boards, stairs, banisters and stringers to be repaired/replaced with same species of wood (pine) and the same style (e.g. tongue & groove deck boards etc.)

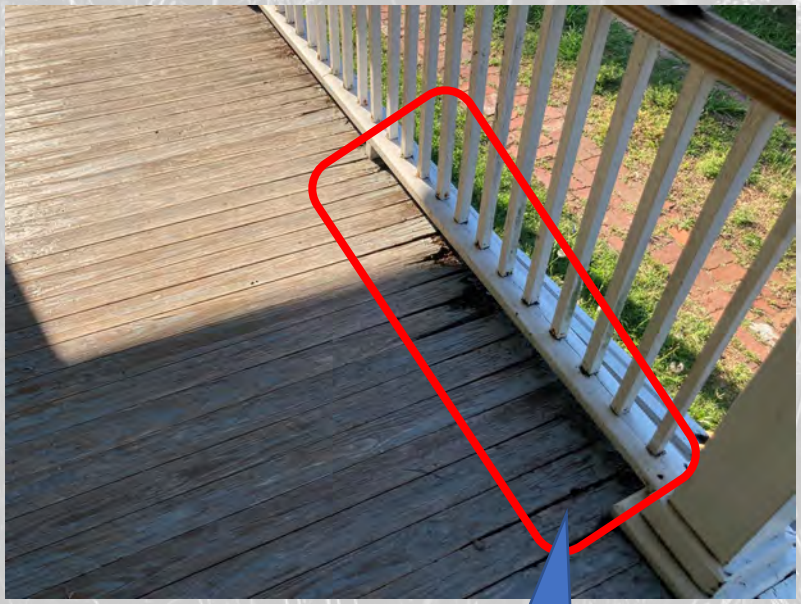

Rotted deck boards



Stairs, banisters, stringers need repair to ensure stability



Rotted deck boards

Windows

- Almost all original windows are painted shut and not functional. Many of the frames are rotted and in disrepair. This presents aesthetic and safety concerns. We'd like to replace all windows with the same species of wood window (pine), but ensure they're functional and up to code (i.e. DP rating, UV rating, etc.).







2. Exterior/Concept photos

Front / Oblique (East Side)









Left Side (South Side)









Rear (West Side)







Right Side (North Side)

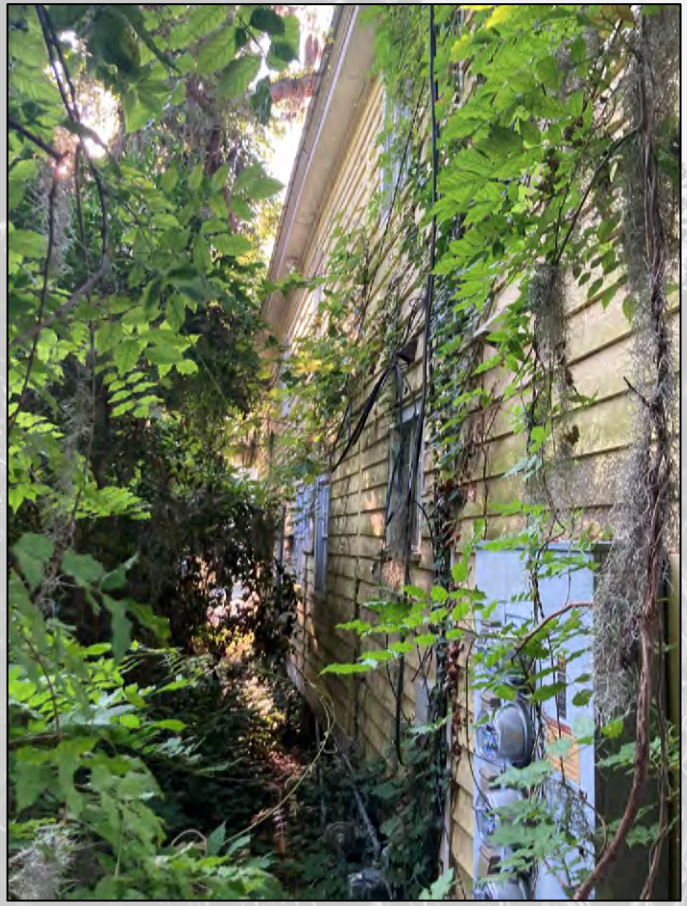





Sidewalk / Drive-way





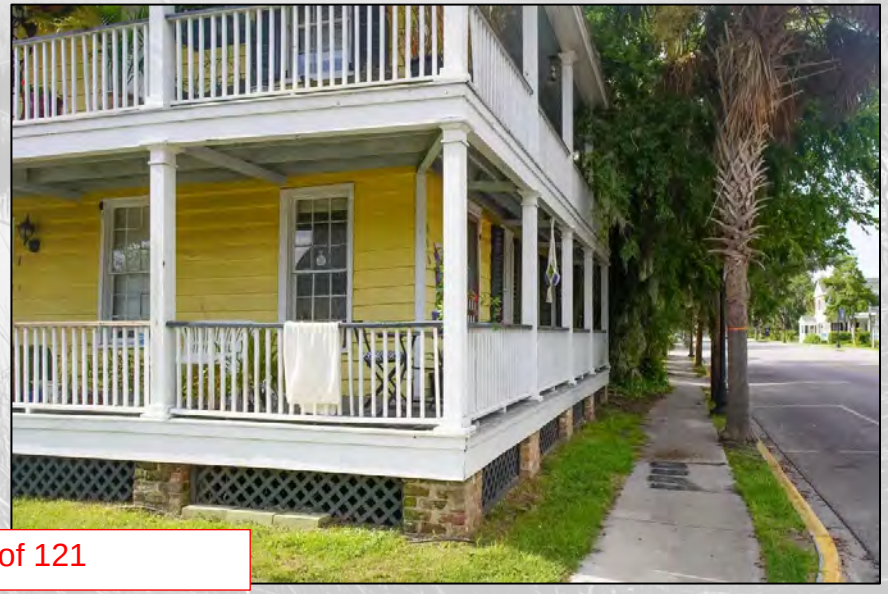

606 Carteret 27 of 121

ADU







606 Carteret 28 of 121

Rail and Deck











Miscellaneous









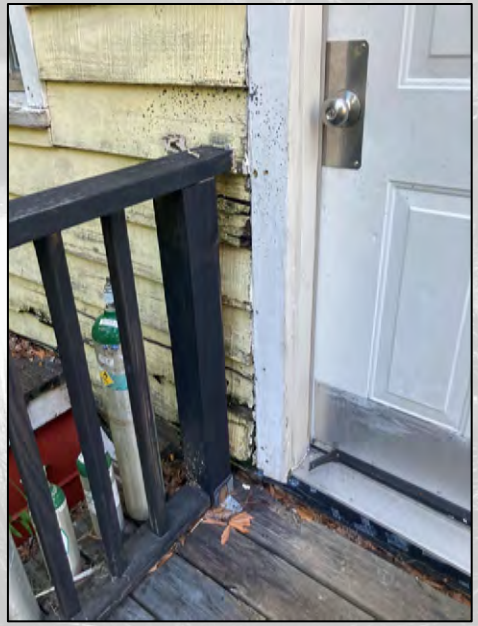

3. Window photos


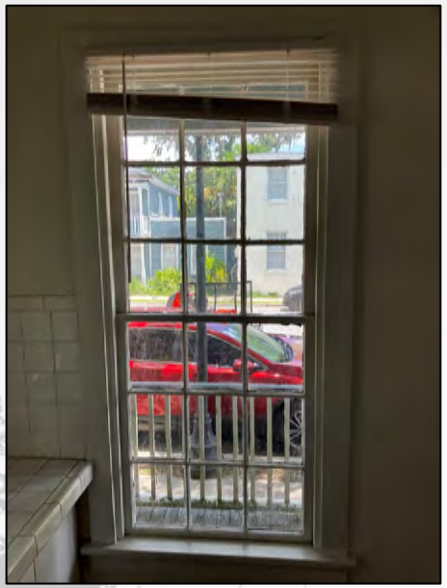

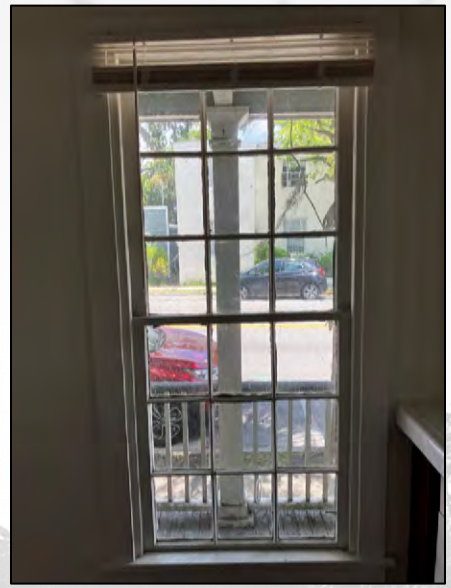

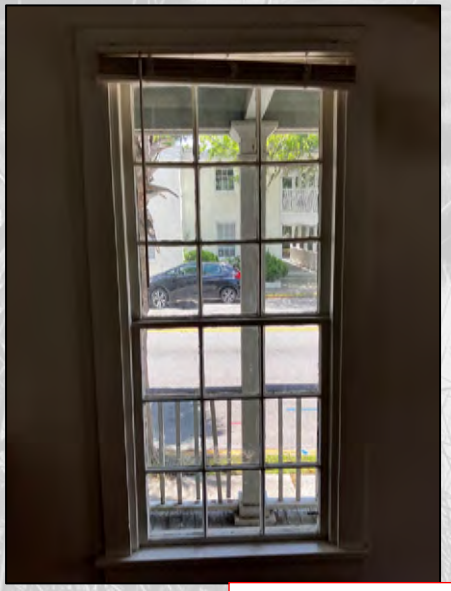

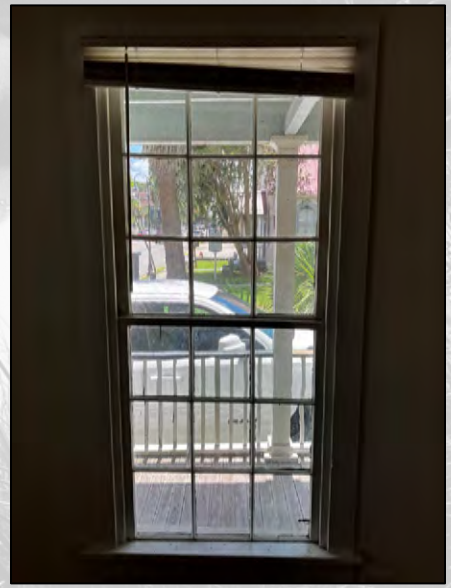


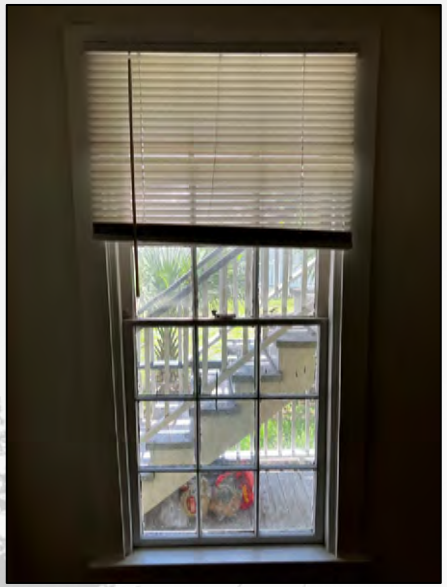

5


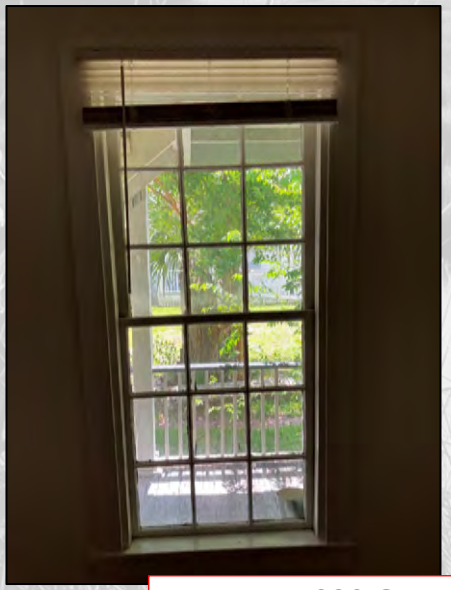








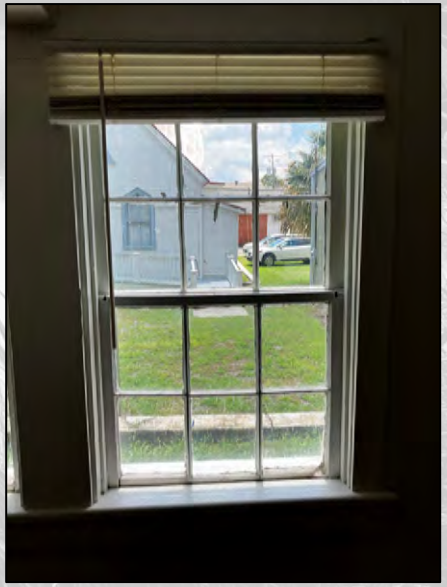

BERMAN
PROPERTY GROUP


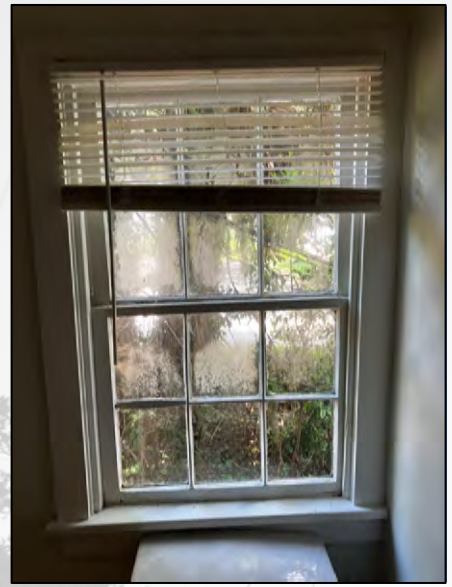







BERMAN
PROPERTY GROUP




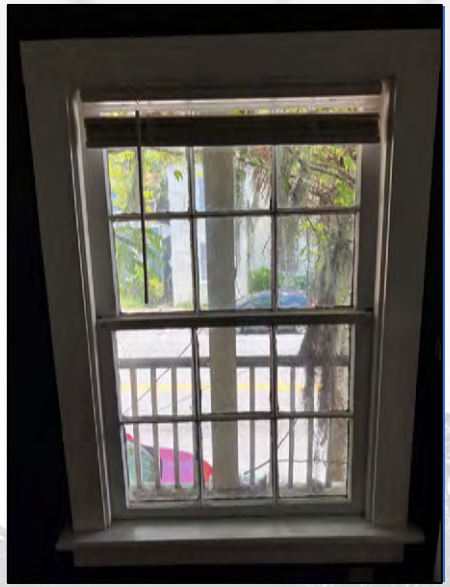








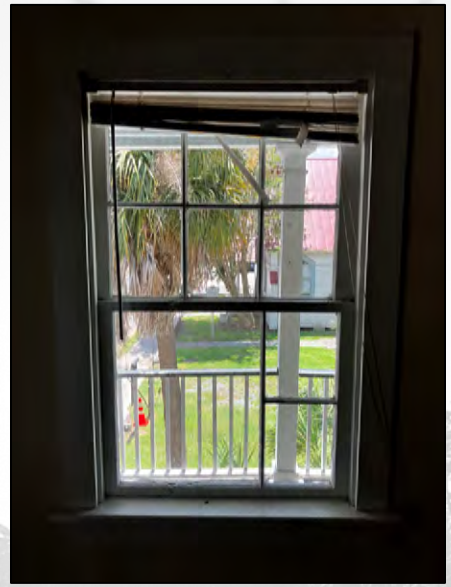

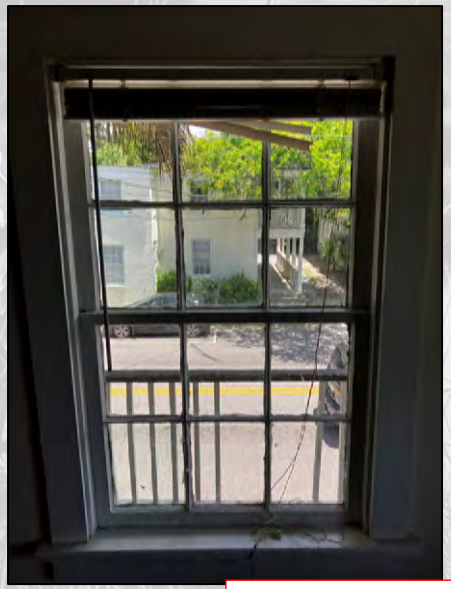



BERMAN
PROPERTY GROUP

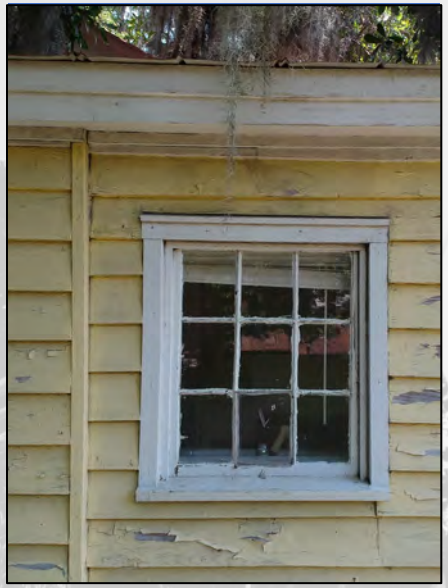




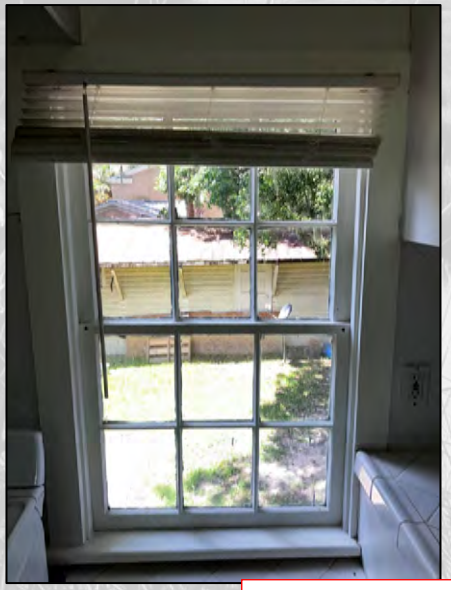



BERMAN
PROPERTY GROUP


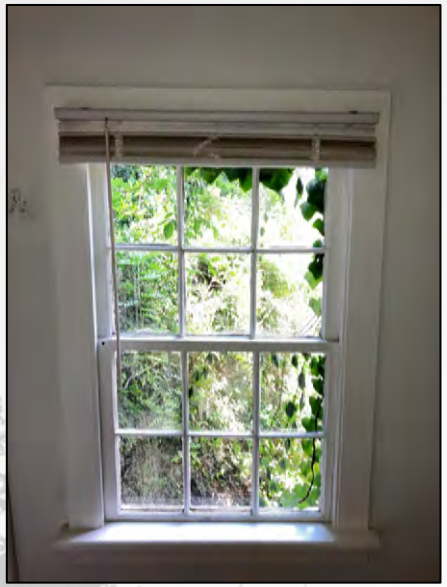












BERMAN PROPERTY GROUP


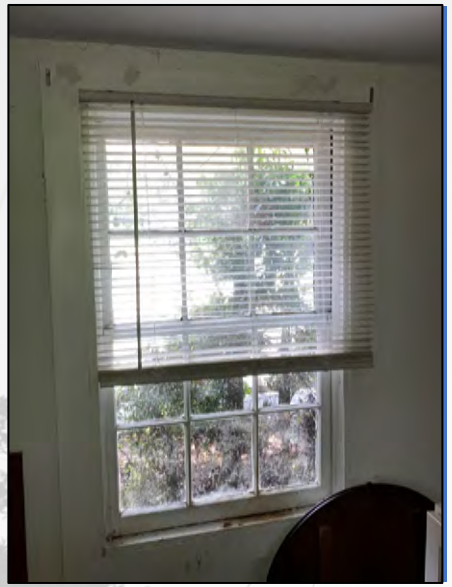





606 Carteret 41 of 121

4. Exterior color choices

Exterior Color Choices

- Siding body:
  - SW 6401 – Independent Gold
- Deck boards:
  - SW 7067 – Cityscape
- Banisters & Shutters:
  - SW 6994 – Greenblack
- Window trim, balusters, spindles, newels:
  - Kolbe – Cloud (or Sherwin Williams equivalent)



KOLBE
WINDOWS & DOORS

FORGENT® SERIES



We're for the visionaries.®

We're for people who take building to new levels.



We're for people who are passionate about design, who care about the big picture and the smallest detail. We're for people who aren't satisfied with mainstream choices... who push the limits of what's possible with the options and innovations that can only be found in Kolbe windows and doors.



We're for quality craftsmanship.

We're for a tradition of excellence that outlasts the latest design trend. The Kolbe story began with a family and a vision. More than 75 years after the Kolbe brothers began their commitment to producing premium quality windows and doors, products bearing their family name can be found in some of North America's most impressive homes and businesses.

We're for expertise.

We're for people who dream of a personalized design experience. That's why you can't find Kolbe windows and doors in the aisles of a home center. Our products are only available through a Kolbe dealer, because they are as passionate about windows and doors as you are about bringing your vision to life. And they will work with you to make your dream a concrete reality.





We're for possibilities.

We're for people who won't settle for "standard." We're for limitless options and custom solutions that can only be found in Kolbe's made-to-order products. Our team members are craftspeople who focus on building one window or door at a time, to create distinctive products that fulfill your unique vision.

We're for innovation.

We're for people who want to take building to new levels, with advancements in not only extraordinary sizes and shapes, but also ground-breaking products. We're for creative thinking that redefines what's possible, constantly reimagining our windows and doors to elevate style, performance and functionality.



Let us bring your vision to life.


© Photo courtesy Adamo Homes

TABLE OF CONTENTS

The Forgent Series 4-5
Innovation & Technology 6-7
Casements & Awnings 8-15
Double Hungs 16-23
Sliding Windows 24-29
Direct Set Windows 30-39
Forgent Complementary Doors 40-55
Complementary Sliding Doors 42-47
Complementary Swinging Doors 48-55
Options & Accessories 56-63
Performance 64-67
Technical Data 68-74

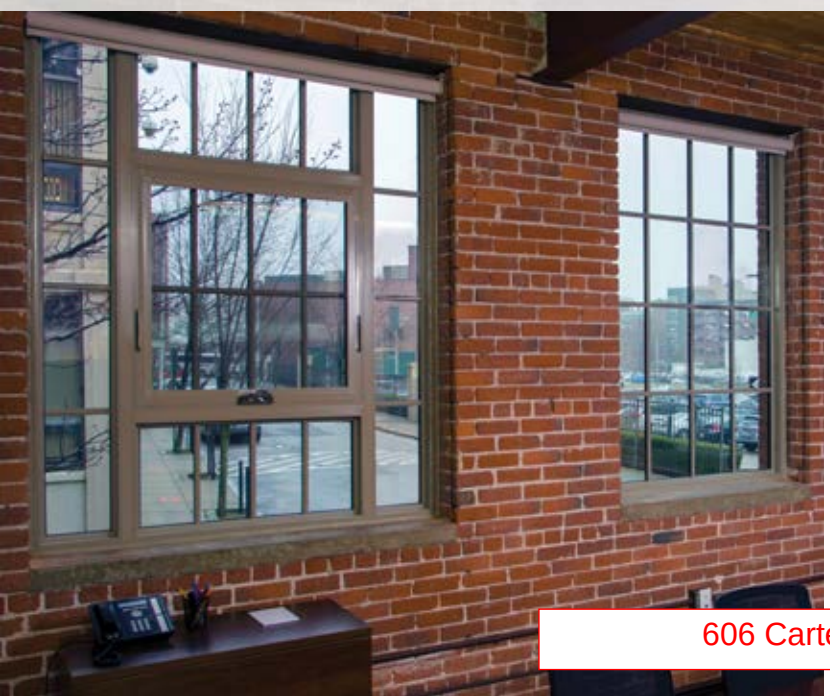

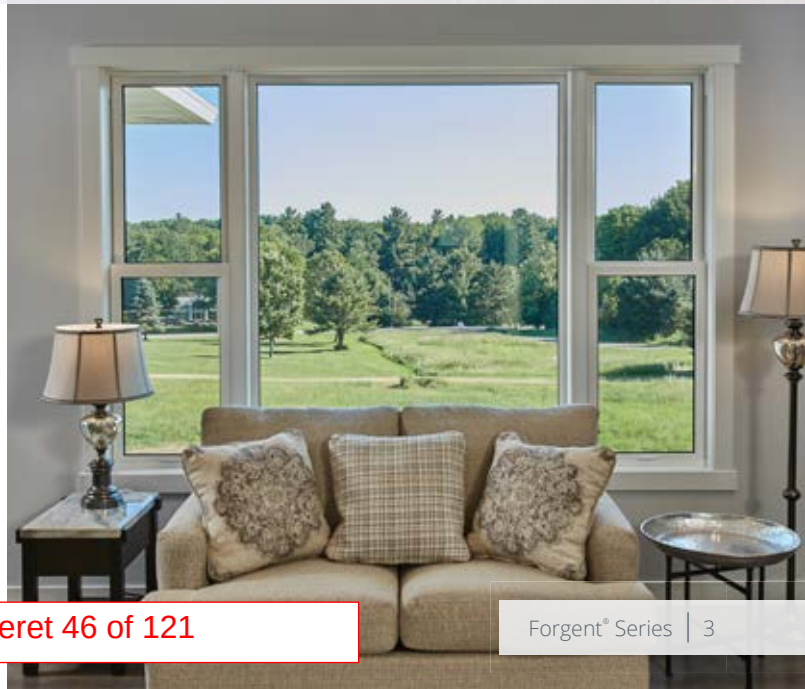

606 Carteret 46 of 121

THE FORGENT® SERIES

Forgent Series windows and doors incorporate innovative design and state-of-the-art technology with a proprietary Glastra® material. Engineered for strength, resilience, and ease-of-installation, this high-performance product line is a perfect choice for new construction or replacement projects.



© Photo courtesy Adamo Homes

606 Carteret 47 of 121





The Forgent Series provides:

STRENGTH & PERFORMANCE:

- Strong and resilient Glastra exterior with Glastra or Wood interior
- Advanced ladder design with multiple chambers for strength and energy efficiency
- Welded sash and frame with AccuForge™ technology for a smooth, air and watertight seam
- Integral nailing fin has fewer sealing points, for rigidity and a watertight installation
- Impact performance capabilities to meet the demands of coastal hurricane zones

EASE OF INSTALLATION:

- Three convenient installation methods: integral nailing fin, installation clips, screw through frame
- Glazing bead receptor helps create a clean break-point during painting and staining
- Accessory groove allows for quick installation of exterior accessories without additional clips
- Dry glazed sash allows for serviceable sash and components

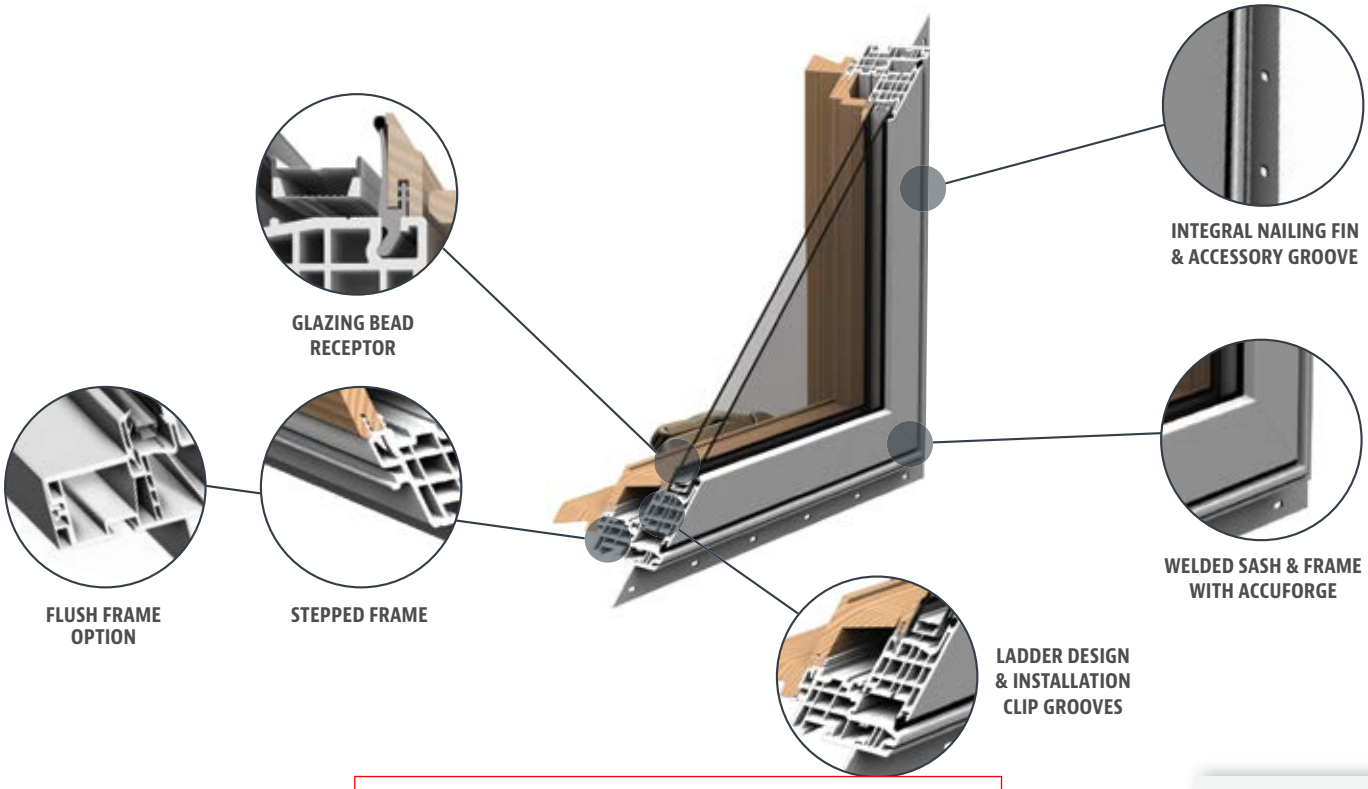

606 Carteret 48 of 121

INNOVATION & TECHNOLOGY



© Photo courtesy of Next Polymers Ltd./Brunet Group

MATERIAL

Forgent Series products are comprised of Glastra, a proprietary hybrid of fiberglass and UV stable polymer. To better match décor and performance requirements, a Glastra exterior with a choice of Glastra or Wood interior is available in select colors and finishes.

Glastra is an innovative, recyclable material that helps form the resilient foundation of Forgent Series products. Manufacturing byproducts are repurposed for use in other industries, such as underground industrial piping. shown in photo above



GLASTRA EXTERIOR WITH GLASTRA INTERIOR

Both the exterior and interior are comprised of Glastra, with finishes available in Cloud, Sahara, Midnight or Bronze.

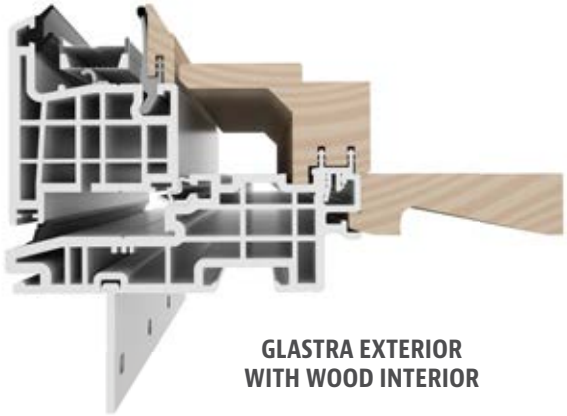

GLASTRA EXTERIOR WITH WOOD INTERIOR

The exterior is comprised of Glastra, while the interior is Pine wood, available in popular pre-finishes including: Double Clear Coat, Latex Primer, Black Paint, White Paint, or a variety of stains.

CONSTRUCTION

Forgent Series windows are constructed of multi-chambered Glastra extrusions in an advanced ladder design for numerous benefits – the chambers add strength and promote energy efficiency. The same structural framework is used for All Glastra and Glastra/Wood products, for consistent performance.

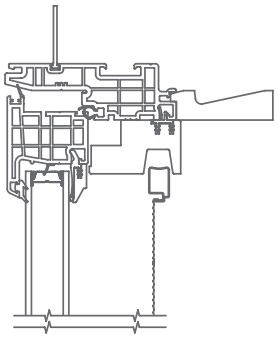

FORGENT SERIES CONSTRUCTION

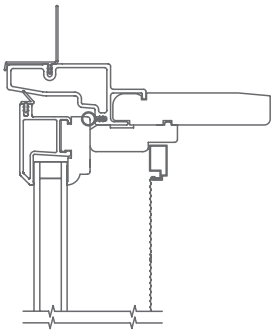

TYPICAL FIBERGLASS CONSTRUCTION

606 Carteret 49 of 121



ACRYLIC FILM

A Midnight or Bronze film can be applied to Forgent Series products with a Glastra exterior and interior. This film utilizes a pigmented acrylic base technology that reduces heat absorption and resists fading. A profile lamination process permanently bonds the film to the Glastra material, enabling it to withstand the harshest of conditions – from extreme heat to extreme cold. And because the film has a very low surface tension, typical dirt, debris – even paint – can be removed from the surface with mild soap and water.

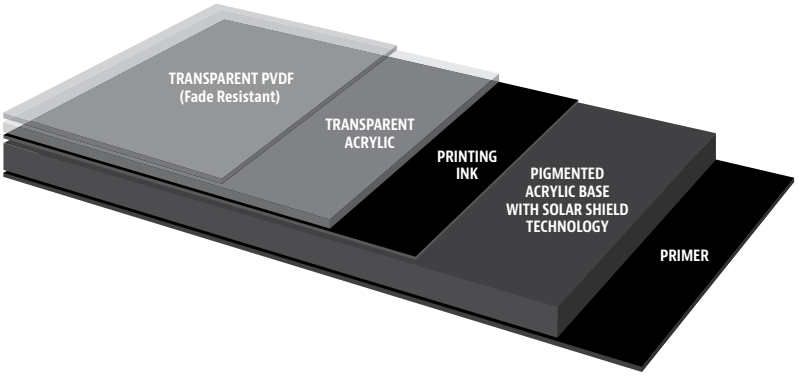

ACCUFORGE™

Forgent Series window frames* and sash feature AccuForge™, an innovative miter joint technology. This state-of-the-art nip welding process creates a stronger air and watertight seam with a smooth, high-end finish.



COMPRESSION SEAL

Forgent Series windows and doors feature EPDM gaskets in the glazing system as well as between the operable sash and frame, to seal the joint and create an air and watertight seal. Similar to those used on commercial windows, cars and airplane doors, they also keep noise out, for a quieter, drier, more comfortable environment.

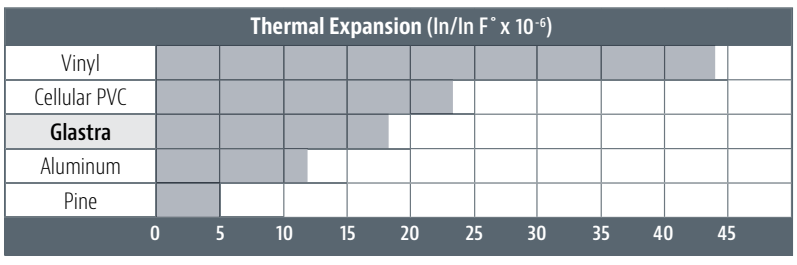

THERMAL EXPANSION

All materials are subject to some level of expansion as temperatures fluctuate. Forgent Series Glastra material is less affected by these changes, with a lower expansion rate than many composite products, and less than half the rate of vinyl products.

AccuForge™ is a trademark of Kolbe & Kolbe Millwork Co., Inc.
*Specialty windows (geometric and radius) and sliding doors are not manufactured with AccuForge technology.
Forgent Series exterior films are compliant with and have achieved 307-16 certification from the American Architectural Manufacturers Association (AAMA). The AAMA 307-16 designation specifically refers to Voluntary Specifications for Laminates Intended for U

606 Carteret 50 of 121

CASEMENTS & AWNINGS

OPERATING | PICTURE



CASEMENT & AWNING STANDARD FEATURES

- All Glastra units with Cloud or Sahara integral color *(see pg. 58)*
- Flush frame groove filler for drywall return *(New Construction - no extension jamb)*
- Energy efficient, insulating Solar Low-E glass *(see pg. 60)*
- Dry glazed to the interior with beveled glazing bead
- Accessory grooves are integral to the extruded frames for the easy addition of accessories
- Insect screen with BetterVue® fiberglass mesh and Water Shed Technology™ *(see screen finishes, pg. 62)*
- Crank-out nesting handle and multi-point locking levers are color matched to the interior *(pg. 9)*
- Integral 1-1/4" nailing fin provides easier installation and helps seal the window opening
- Box-to-box standard mullion *(see pg. 14)*

NOTE: All measurements are nominal.



ALL GLASTRA CASEMENT
(interior)



ALL GLASTRA CASEMENT
(exterior)

BetterVue® and Water Shed Technology™ are registered trademarks of PHIFER INCORPORATED.
Limitations may apply. Please consult your local Kolbe dealer for more details.

606 Carteret 51 of 121


© Spacecrafting



CASEMENT & AWNING OPTIONS

Glass (see pg. 60):

- Solar Gain Low-E
- Solar Control Low-E
- Solar Advanced Control Low-E
- Turtle Glass
- ThermaPlus™ Low-E
- Neat+™
- Triple pane
- Tinted, colored or patterned
- Tempered
- Laminated
- Preserve® Film
- Other options standard to the industry

Divided Lites (see pg. 61):

- Performance divided lites with 7/8", 1-1/8" or 2-1/4" bars
- Grilles-in-the-airspace

NOTE: All measurements are nominal.

Other Options:

- Replacement casements and awnings
  (3-1/4" overall frame depth for All Glastra units, 4-1/16" for Glastra/Wood units; no nailing fin and pre-drilled for installation)
- Glastra/Wood: Unfinished pine interior with no visible fasteners or wood exposed to the exterior
- Latex primed interior* *(Glastra/Wood units, see pg. 59)*
- Interior prefinishing *(Glastra/Wood units, see pg. 59)*
- Exterior acrylic film in Midnight or Bronze
  (available on All Glastra or Glastra/Wood units; see pg. 58)
- Interior acrylic film in Midnight or Bronze
  (only on All Glastra units with Midnight or Bronze exterior; see pg. 58)
- Multiple trim accessories *(shipped loose; see pg. 63)*
- Insect screen available with aluminum or UltraVue® mesh *(see screen finishes, pg. 62)*
- Extension jambs available in depths up to 9" overall
- Offset extension jambs
- Stepped frame groove filler for drywall return
  (no extension jamb)
- Glastra/Wood: Wood glazing bead receptor
- Galvanized steel installation clips
- Ashlar handle *(see hardware finishes, pg. 62)*
- Window Opening Control Device (WOCD) *(see pg. 62)*
- Coastal hardware package
- Impact performance modifications *(see pg. 65)*

*Latex primer is not a final finish.

HARDWARE (see hardware finishes, pg. 62):

Crank-out handles fold down when not in use, and multi-point locks engage with a locking lever.



NESTING HANDLE
(shown in Clay)



LOCKING LEVER
(shown in Clay)

Also available: Satin Nickel | White | Matte Black | Rustic Umber



ASHLAR HANDLE
(shown in Matte Black)

Also available: Satin Nickel | White | Rustic Umber

UltraVue® is a registered trademark of PHIFER INCORPORATED. Limitations may apply. Please consult your local Kolbe dealer for more details.
Finish colors will vary from printed images. Please make selections using actual color samples available from your local Kolbe dealer.
Not all hardware color options are avail

606 Carteret 52 of 121

CASEMENTS | Elevation Charts

CASEMENTS

U.D.			1' 5-1/2"	1' 11-1/2"	2' 5-1/2"	2' 11-1/2"
	R.O.		1' 6"	2' 0"	2' 6"	3' 0"
		G.S.	12 15/16"	18 15/16"	24 15/16"	30 15/16"
1' 11-1/2"	2' 0"	18 15/16"	 MC 1620	 MC 2020	 MC 2620	 MC 3020
2' 5-1/2"	2' 6"	24 15/16"	 MC 1626	 MC 2026	 MC 2626	 MC 3026
2' 11-1/2"	3' 0"	30 15/16"	 MC 1630	 MC 2030	 MC 2630	 MC 3030*
3' 5-1/2"	3' 6"	36 15/16"	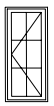 MC 1636	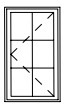 MC 2036	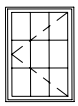 MC 2636*	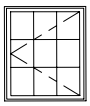 MC 3036*
3' 11-1/2"	4' 0"	42 15/16"	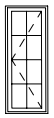 MC 1640	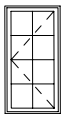 MC 2040	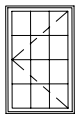 MC 2640*	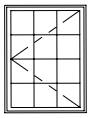 MC 3040*
4' 5-1/2"	4' 6"	48 15/16"	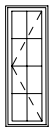 MC 1646	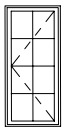 MC 2046	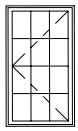 MC 2646*	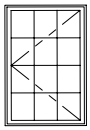 MC 3046*
4' 11-1/2"	5' 0"	54 15/16"	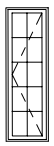 MC 1650	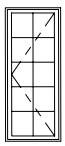 MC 2050	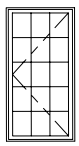 MC 2650*	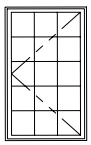 MC 3050*
5' 5-1/2"	5' 6"	60 15/16"	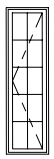 MC 1656	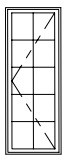 MC 2056	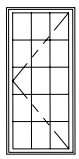 MC 2656*	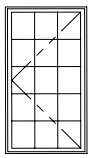 MC 3056*
5' 11-1/2"	6' 0"	66 15/16"	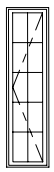 MC 1660	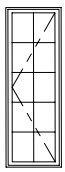 MC 2060	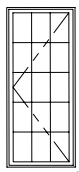 MC 2660*	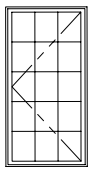 MC 3060*

U.D. = Unit Dimension • R.O. = Rough Opening • G.S. = Glass Size

*Units meet most national emergency escape and rescue requirements.

NOTE: All measurements are nominal. Elevation charts are not to scale.

Divided lites are optional.

Some installation procedures will require a larger rough opening than noted (i.e. installations utilizing our installation clips), therefore, you may need to increase the rough opening size accordingly. Rough opening gaps may be increased up to a maximum of 1/2" on all sides and still be within good practice guidelines. For rough opening recommendations, see pg. 68.

606 Carteret 53 of 121

CASEMENTS | PICTURE UNITS

U.D.			1' 5-1/2"	1' 11-1/2"	2' 5-1/2"	2' 11-1/2"	3' 5-1/2"	3' 11-1/2"	4' 11-1/2"	5' 11-1/2"
	R.O.		1' 6"	2' 0"	2' 6"	3' 0"	3' 6"	4' 0"	5' 0"	6' 0"
		G.S.	12 15/16"	18 15/16"	24 15/16"	30 15/16"	36 15/16"	42 15/16"	54 15/16"	66 15/16"
1' 5-1/2"	1' 6"	12 15/16"	 MCPT 1616	 MCPT 2016	 MCPT 2616	 MCPT 3016	 MCPT 3616	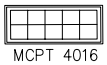 MCPT 4016	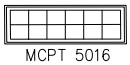 MCPT 5016	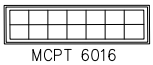 MCPT 6016
1' 11-1/2"	2' 0"	18 15/16"	 MCPT 1620	 MCPT 2020	 MCPT 2620	 MCPT 3020	 MCPT 3620	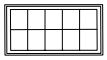 MCPT 4020	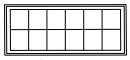 MCPT 5020	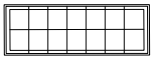 MCPT 6020
2' 5-1/2"	2' 6"	24 15/16"	 MCPT 1626	 MCPT 2026	 MCPT 2626	 MCPT 3026	 MCPT 3626	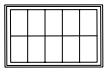 MCPT 4026	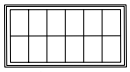 MCPT 5026	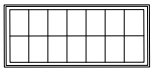 MCPT 6026
2' 11-1/2"	3' 0"	30 15/16"	 MCPT 1630	 MCPT 2030	 MCPT 2630	 MCPT 3030	 MCPT 3630	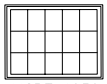 MCPT 4030	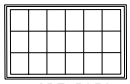 MCPT 5030	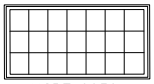 MCPT 6030
3' 5-1/2"	3' 6"	36 15/16"	 MCPT 1636	 MCPT 2036	 MCPT 2636	 MCPT 3036	 MCPT 3636	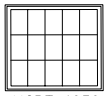 MCPT 4036	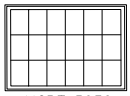 MCPT 5036	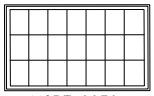 MCPT 6036
3' 11-1/2"	4' 0"	42 15/16"	MCPT 1640	MCPT 2040	MCPT 2640	MCPT 3040	MCPT 3640	MCPT 4040	MCPT 5040	MCPT 6040
4' 5-1/2"	4' 6"	48 15/16"	MCPT 1646	MCPT 2046	MCPT 2646	MCPT 3046	MCPT 3646	MCPT 4046	MCPT 5046	MCPT 6046
4' 11-1/2"	5' 0"	54 15/16"	MCPT 1650	MCPT 2050	MCPT 2650	MCPT 3050	MCPT 3650	MCPT 4050	MCPT 5050	MCPT 6050
5' 5-1/2"	5' 6"	60 15/16"	MCPT 1656	MCPT 2056	MCPT 2656	MCPT 3056	MCPT 3656	MCPT 4056	MCPT 5056	MCPT 6056
5' 11-1/2"	6' 0"	66 15/16"	MCPT 1660	MCPT 2060	MCPT 2660	MCPT 3060	MCPT 3660	MCPT 4060	MCPT 5060	MCPT 6060

U.D. = Unit Dimension • R.O. = Rough Opening • G.S. = Glass Size

NOTE: All measurements are nominal. Elevation charts are not to scale.

Divided lites are optional.

Some installation procedures will require a larger rough opening than noted (i.e. installations utilizing our installation clips), therefore, you may need to increase the rough opening size accordingly. Rough opening gaps may be increased up to a maximum of 1/2" on all sides and still be within good practice guidelines. For rough opening recommendations, see pg. 68.

606 Carteret 54 of 121

AWNINGS | Elevation Chart

AWNINGS

U.D.			1' 11-1/2"	2' 5-1/2"	2' 11-1/2"	3' 5-1/2"	3' 11-1/2"
	R.O.		2' 0"	2' 6"	3' 0"	3' 6"	4' 0"
		G.S.	18 13/16"	24 15/16"	30 15/16"	36 15/16"	42 15/16"
1' 11-1/2"	2' 0"	20 13/16"	 MA 2020	 MA 2620	 MA 3020	 MA 3620	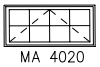 MA 4020
2' 5-1/2"	2' 6"	26 13/16"	 MA 2026	 MA 2626	 MA 3026	 MA 3626	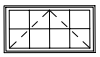 MA 4026
2' 11-1/2"	3' 0"	32 13/16"	 MA 2030	 MA 2630	 MA 3030	 MA 3630	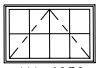 MA 4030
3' 5-1/2"	3' 6"	38 13/16"	 MA 2036	 MA 2636	 MA 3036	 MA 3636	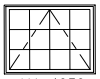 MA 4036
3' 11-1/2"	4' 0"	44 13/16"	 MA 2040	 MA 2640	 MA 3040	 MA 3640	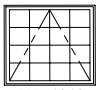 MA 4040

U.D. = Unit Dimension • R.O. = Rough Opening • G.S. = Glass Size

NOTE: All measurements are nominal. Elevation charts are not to scale.

The units shown are stand-alone units. Adjustments may be required when stacking over other units; adjustments will be made in the factory.

Divided lites are optional.

Some installation procedures will require a larger rough opening than noted (i.e. installations utilizing our installation clips), therefore, you may need to increase the rough opening size accordingly. Rough opening gaps may be increased up to a maximum of 1/2" on all sides and still be within good practice guidelines. For rough opening recommendations, see pg. 68.

606 Carteret 55 of 121

CASEMENTS & AWNINGS | Cross Section Drawings

CASEMENTS & AWNINGS – ALL GLASTRA

Vertical Section

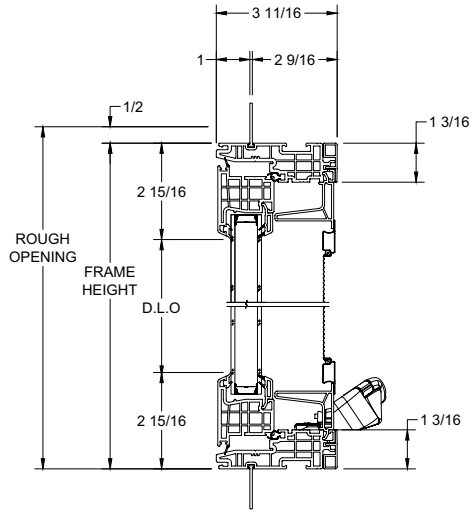

Horizontal Section

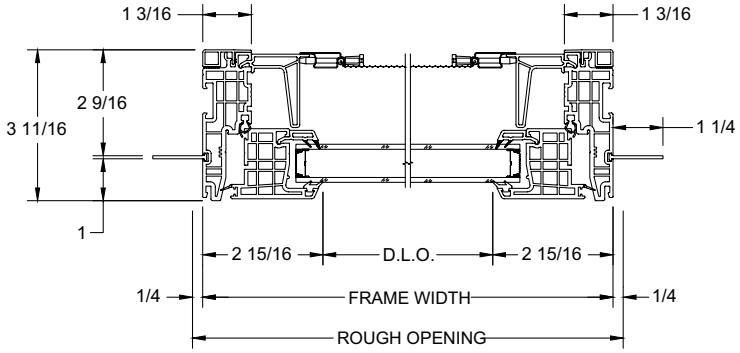

(Shown with optional flush frame filler)

CASEMENTS & AWNINGS – GLASTRA/WOOD

Vertical Section

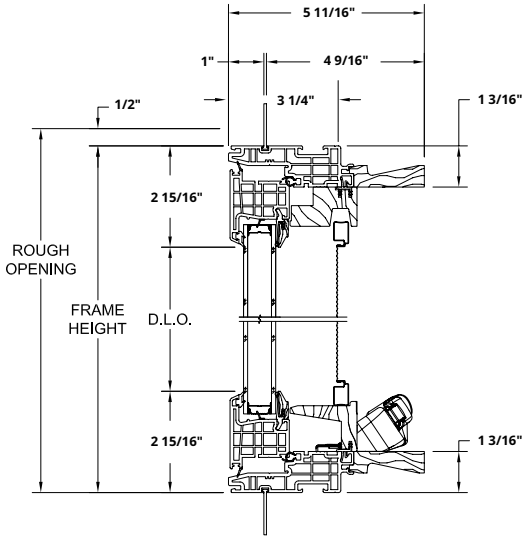

Horizontal Section

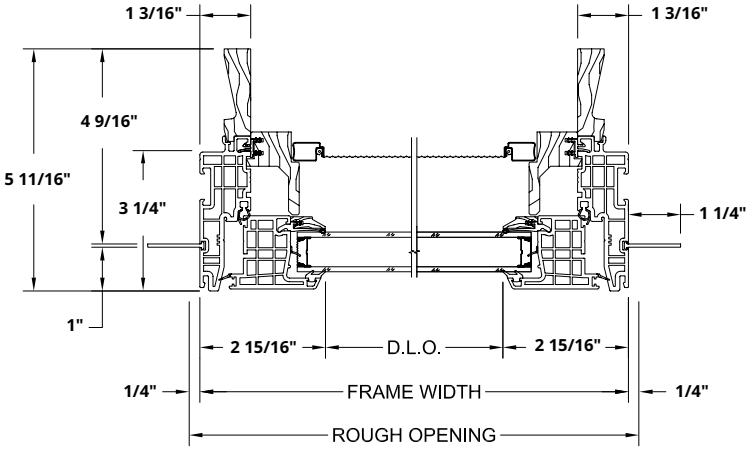

NOTE: Drawings are not to scale. For Forgent Series accessory drawings, see pg. 63. Additional and the most current drawings are available at **kolbewindows.com**

606 Carteret 56 of 121

CASEMENTS & AWNINGS | Mulling Options

CASEMENTS & AWNINGS – ALL GLASTRA

1/16" Standard Mullion
Standard Performance
(Flush)

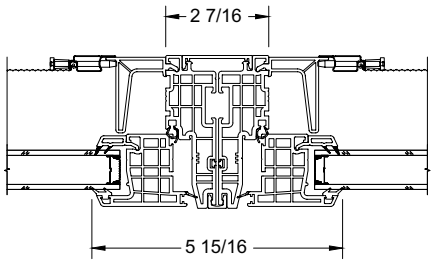

1/2" Mullion Reinforced
Commercial & Impact Performance
(No T-Mulls)

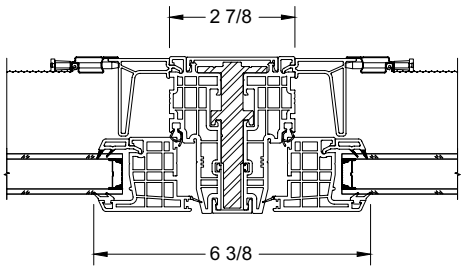

1-1/2" Mullion Reinforced
Commercial & Impact Performance

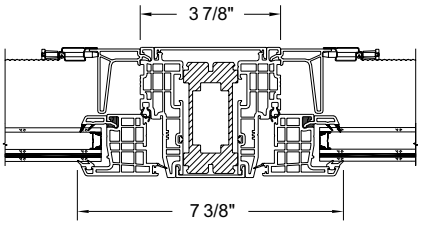

CASEMENTS & AWNINGS – GLASTRA/WOOD

1/16" Standard Mullion
Standard Performance
(Flush)

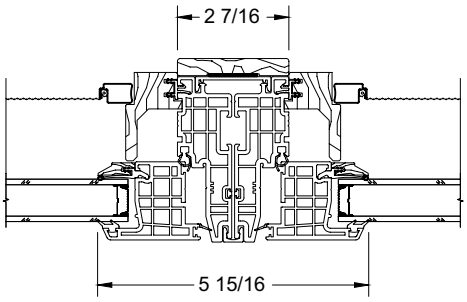

1/2" Mullion Reinforced
Commercial & Impact Performance
(No T-Mulls)

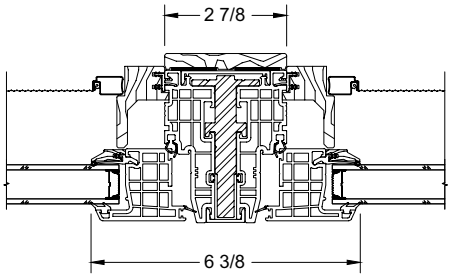

1-1/2" Mullion Reinforced
Commercial & Impact Performance

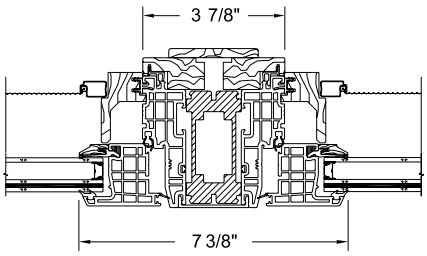

These mullion types are available on all Forgent Series windows. Depth dimensions may change. Please refer to **kolbewindows.com** for the most current drawings and technical details.

NOTE: Drawings are not to scale. For Forgent Series accessory drawings, see pg. 63.

606 Carteret 57 of 121



606 Carteret 58 of 121

DOUBLE HUNGS

OPERATING | STUDIO



DOUBLE HUNG STANDARD FEATURES

- All Glastra units with Cloud or Sahara integral color *(see pg. 58)*
- Flush frame groove filler for drywall return *(New Construction - no extension jamb)*
- Energy efficient, insulating Solar Low-E glass *(see pg. 60)*
- Equal glass sizing provides matching sight lines from sash to sash
- Dry glazed to the interior with beveled glazing bead
- Accessory grooves are integral to the extruded frames for the easy addition of accessories
- Full frame insect screen with BetterVue® fiberglass mesh and Water Shed Technology™ *(see screen finishes, pg. 62)*
- Stainless steel, constant force balance system provides durability and ease of operation
- Sash lock and tilt latches are color matched to the interior *(pg. 17)*
- Lift handle on bottom sash is color matched to the interior *(only on All Glastra units; pg. 17)*
- Integral 1-1/4" nailing fin provides easier installation and helps seal the window opening *(New Construction)*

NOTE: All measurements are nominal.



GLASTRA/WOOD
NEW CONSTRUCTION DOUBLE HUNG
(interior)



GLASTRA/WOOD
NEW CONSTRUCTION DOUBLE HUNG
(exterior)

BetterVue® and Water Shed Technology™ are registered trademarks of PHIFER INCORPORATED.
Limitations may apply. Please consult your local Kolbe dealer for more details.

606 Carteret 59 of 121





DOUBLE HUNG OPTIONS

Glass **(see pg. 60):**

- Solar Gain Low-E
- Solar Control Low-E
- Solar Advanced Control Low-E
- Turtle Glass
- ThermaPlus™ Low-E
- Neat+™
- Triple pane
- Tinted, colored or patterned
- Tempered
- Laminated
- Preserve® Film
- Other options standard to the industry

Divided Lites **(see pg. 61):**

- Performance divided lites with 7/8", 1-1/8" or 2-1/4" bars
- Grilles-in-the-airspace

NOTE: All measurements are nominal.

Other Options:

- Replacement double hungs
  (3-1/4" overall frame depth for All Glastra units, 4-1/8" for Glastra/Wood units)
- Glastra/Wood: Unfinished pine interior with no visible fasteners or wood exposed to the exterior
- Latex primed interior**(Glastra/Wood units, see pg. 59)*
- Interior prefinishing *(Glastra/Wood units, see pg. 59)*
- Exterior acrylic film in Midnight or Bronze
  (available on All Glastra or Glastra/Wood units; see pg. 58)
- Interior acrylic film in Midnight or Bronze
  (only on All Glastra units with Midnight or Bronze exterior; see pg. 58)
- Fixed top sash
- Multiple trim accessories *(shipped loose; see pg. 63)*
- Insect screen available with aluminum or UltraVue® mesh *(see screen finishes, pg. 62)*
- Extension jambs available in depths up to 9" overall
- Offset extension jambs
- Stepped frame groove filler for drywall return
  (no extension jamb)
- Glastra/Wood: Wood glazing bead receptor
- Galvanized steel installation clips
- Window Opening Control Device (WOCD) *(see pg. 62)*
- Sash limiters for safety *(non by-passable and does not meet WOCD requirements)*
- Cottage and reverse cottage style
- Impact performance modifications *(see pg. 65)*

*Latex primer is not a final finish.

HARDWARE **(see hardware finishes, pg. 62):**

A sash lock and tilt latches are applied to all double hung windows as standard.



SASH LOCK
(shown in Clay)



TILT LATCHES
(shown in Clay)

Also available: Satin Nickel | White | Matte Black | Rustic Umber



LIFT HANDLE – ALL GLASTRA UNITS
(shown in White)

Also available: Clay | Matte Black | Rustic Umber

UltraVue® is a registered trademark of PHIFER INCORPORATED. Limitations may apply. Please consult your local Kolbe dealer for more details.
Finish colors will vary from printed images. Please make selections using actual color samples available from your local Kolbe dealer.
Not all hardware color options are available o

606 Carteret 60 of 121

DOUBLE HUNGS | Elevation Charts

NEW CONSTRUCTION DOUBLE HUNGS

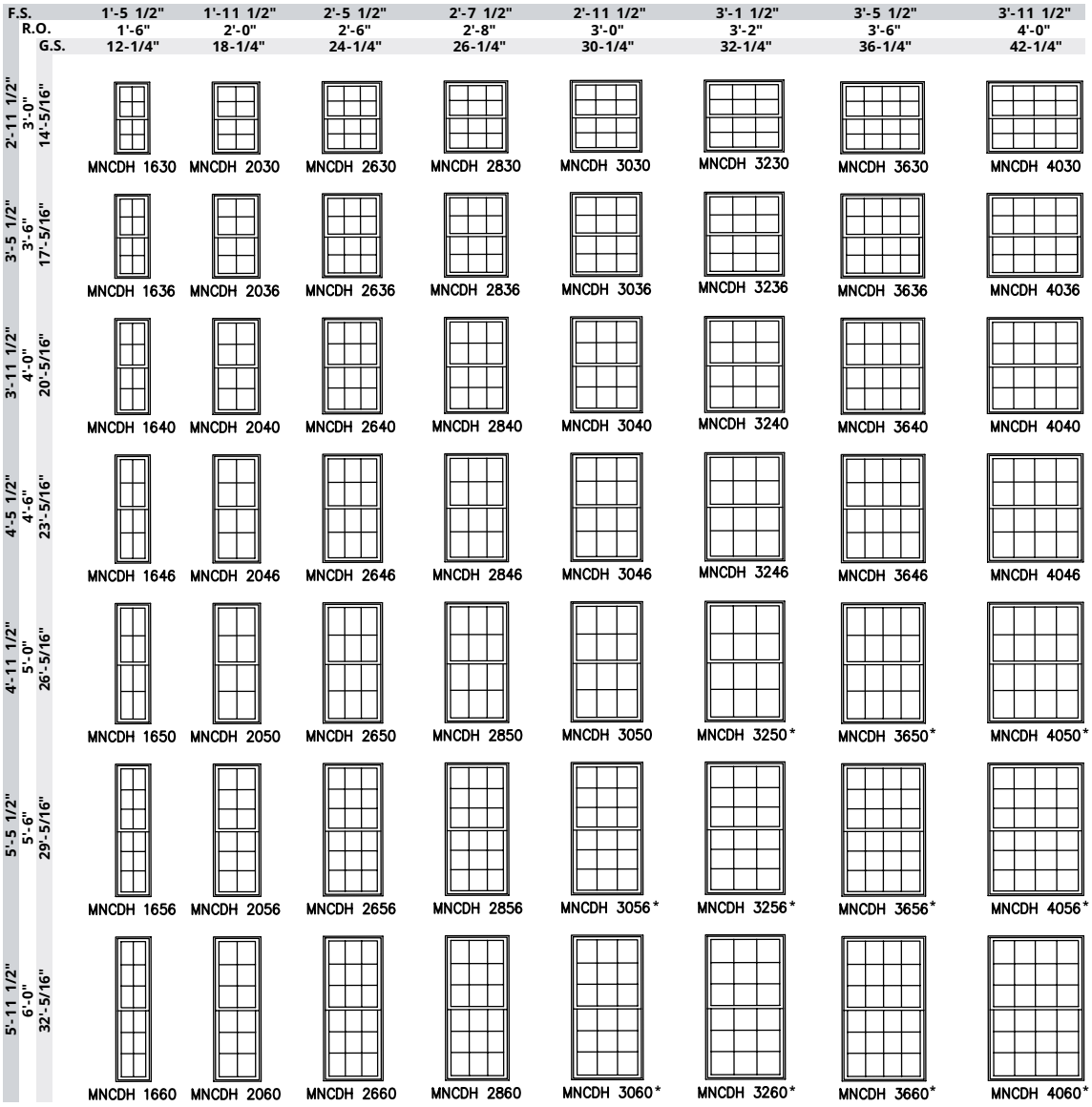

F.S. = Frame Size • R.O. = Rough Opening • G.S. = Glass Size

* Units meet most national emergency escape and rescue requirements

NOTE: All measurements are nominal. Elevation charts are not to scale.

Divided lites are optional.

Some installation procedures will require a larger rough opening than noted (i.e. installations utilizing our installation clips), therefore, you may need to increase the rough opening size accordingly. Rough opening gaps may be increased up to a maximum of 1/2" on all sides and still be within good practice guidelines. For rough opening recommendations, see pg. 68.

606 Carteret 61 of 121

NEW CONSTRUCTION DOUBLE HUNGS | STUDIO UNITS

F.S.	R.O.	G.S.	1'-5 1/2"	1'-11 1/2"	2'-5 1/2"	2'-7 1/2"	2'-11 1/2"	3'-5 1/2"	3'-11 1/2"	4'-11 1/2"	5'-11 1/2"
			1'-6"	2'-0"	2'-6"	2'-8"	3'-0"	3'-6"	4'-0"	5'-0"	6'-0"
			12 7/32"	18 7/32"	24 7/32"	26 7/32"	30 7/32"	36 7/32"	42 7/32"	54 7/32"	66 7/32"
1'-11 1/2"	2'-0"	18 7/32"	MNCSW 1620	MNCSW 2020	MNCSW 2620	MNCSW 2820	MNCSW 3020	MNCSW 3620	MNCSW 4020	MNCSW 5020	MNCSW 6020
2'-5 1/2"	2'-6"	24 7/32"	MNCSW 1626	MNCSW 2026	MNCSW 2626	MNCSW 2826	MNCSW 3026	MNCSW 3626	MNCSW 4026	MNCSW 5026	MNCSW 6026
2'-11 1/2"	3'-0"	30 7/32"	MNCSW 1630	MNCSW 2030	MNCSW 2630	MNCSW 2830	MNCSW 3030	MNCSW 3630	MNCSW 4030	MNCSW 5030	MNCSW 6030
3'-5 1/2"	3'-6"	36 7/32"	MNCSW 1636	MNCSW 2036	MNCSW 2636	MNCSW 2836	MNCSW 3036	MNCSW 3636	MNCSW 4036	MNCSW 5036	MNCSW 6036
3'-11 1/2"	4'-0"	42 7/32"	MNCSW 1640	MNCSW 2040	MNCSW 2640	MNCSW 2840	MNCSW 3040	MNCSW 3640	MNCSW 4040	MNCSW 5040	MNCSW 6040
4'-5 1/2"	4'-6"	48 7/32"	MNCSW 1646	MNCSW 2046	MNCSW 2646	MNCSW 2846	MNCSW 3046	MNCSW 3646	MNCSW 4046	MNCSW 5046	MNCSW 6046
4'-11 1/2"	5'-0"	54 7/32"	MNCSW 1650	MNCSW 2050	MNCSW 2650	MNCSW 2850	MNCSW 3050	MNCSW 3650	MNCSW 4050	MNCSW 5050	MNCSW 6050
5'-5 1/2"	5'-6"	60 7/32"	MNCSW 1656	MNCSW 2056	MNCSW 2656	MNCSW 2856	MNCSW 3056	MNCSW 3656	MNCSW 4056	MNCSW 5056	MNCSW 6056
5'-11 1/2"	6'-0"	66 7/32"	MNCSW 1660	MNCSW 2060	MNCSW 2660	MNCSW 2860	MNCSW 3060	MNCSW 3660	MNCSW 4060	MNCSW 5060	MNCSW 6060

F.S. = Frame Size • R.O. = Rough Opening • G.S. = Glass Size

NOTE: All measurements are nominal. Elevation charts are not to scale.

Divided lites are optional.

Some installation procedures will require a larger rough opening than noted (i.e. installations utilizing our installation clips), therefore, you may need to increase the rough opening size accordingly. Rough opening gaps may be increased up to a maximum of 1/2" on all sides and still be within good practice guidelines. For rough opening recommendations, see pg. 68.

606 Carteret 62 of 121

DOUBLE HUNGS | Cross Section Drawings

NEW CONSTRUCTION DOUBLE HUNGS – ALL GLASTRA

Vertical Section

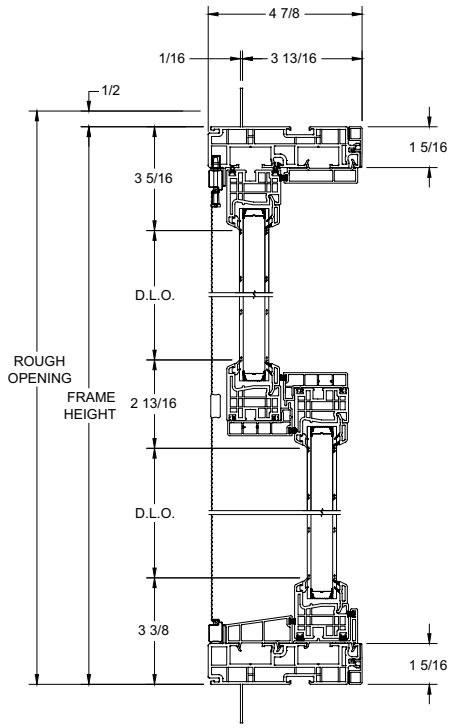

Horizontal Section

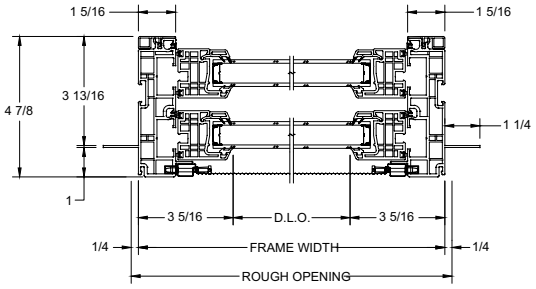

NEW CONSTRUCTION DOUBLE HUNGS – GLASTRA/WOOD

Vertical Section

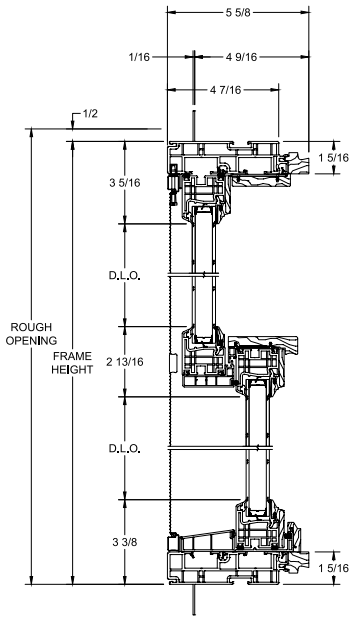

Horizontal Section

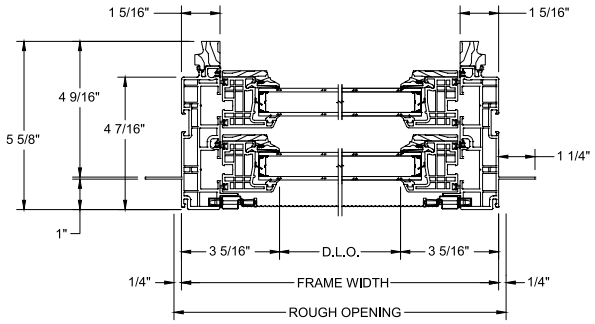

NOTE: Drawings are not to scale. For Forgent Series accessory drawings, see pg. 63. Additional and the most current drawings are available at **kolbewindows.com**

606 Carteret 63 of 121

NEW CONSTRUCTION STUDIO WINDOWS – ALL GLASTRA

Vertical Section

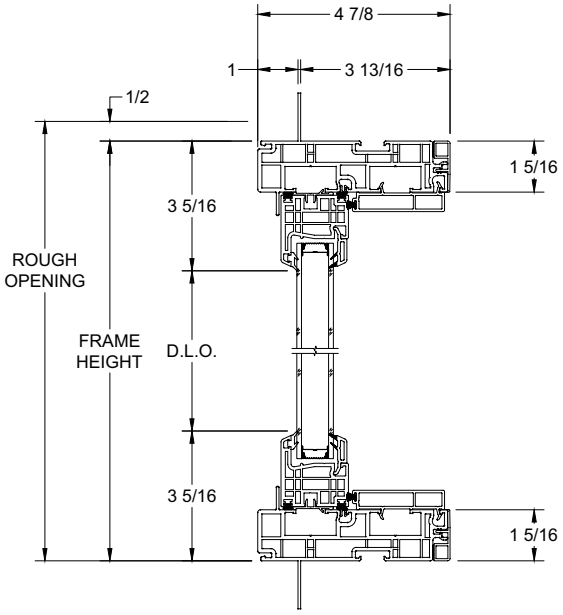

Horizontal Section

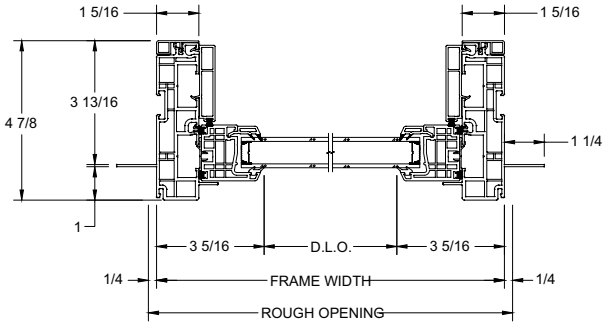

(Shown with optional flush frame filler)

NEW CONSTRUCTION STUDIO WINDOWS – GLASTRA/WOOD

Vertical Section

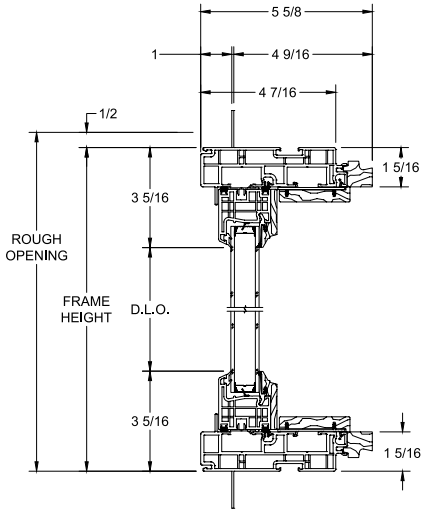

Horizontal Section

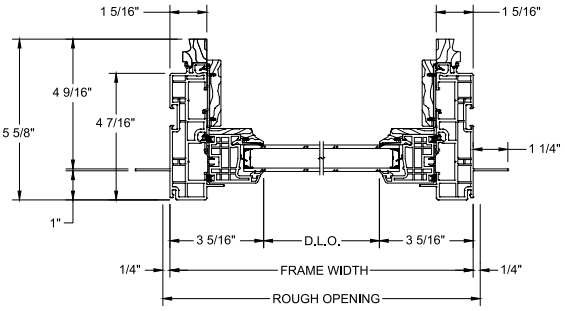

NOTE: Drawings are not to scale. For Forgent Series accessory drawings, see pg. 63. Additional and the most current drawings are available at **kolbewindows.com**

606 Carteret 64 of 121

DOUBLE HUNGS | Cross Section Drawings

REPLACEMENT DOUBLE HUNGS – ALL GLASTRA

Vertical Section

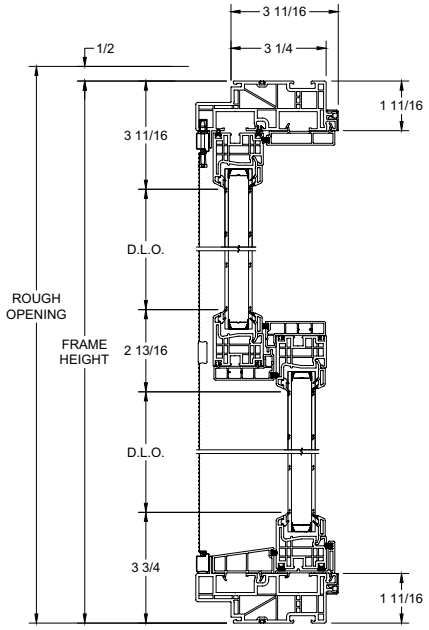

Horizontal Section

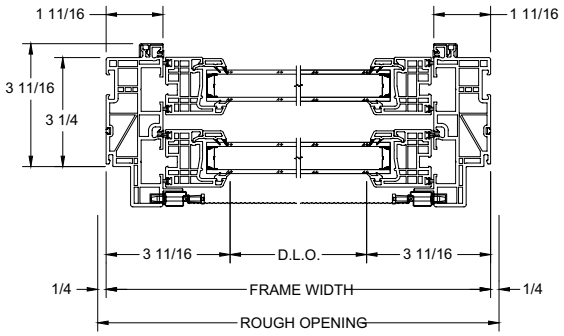

REPLACEMENT DOUBLE HUNGS – GLASTRA/WOOD

Vertical Section

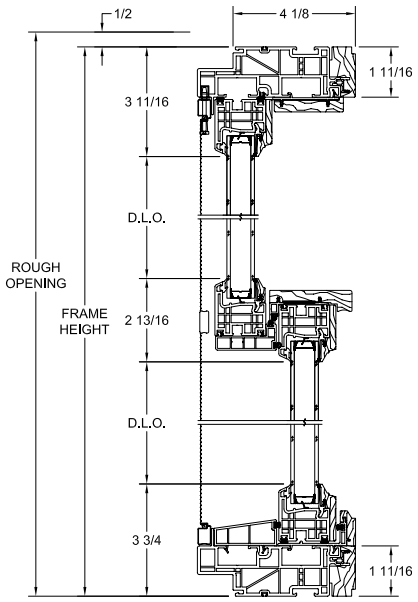

Horizontal Section

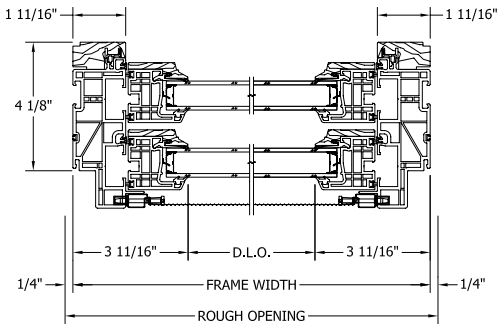

NOTE: Drawings are not to scale. For Forgent Series accessory drawings, see pg. 63. Additional and the most current drawings are available at **kolbewindows.com**

606 Carteret 65 of 121

REPLACEMENT STUDIO WINDOWS – ALL GLASTRA

Vertical Section

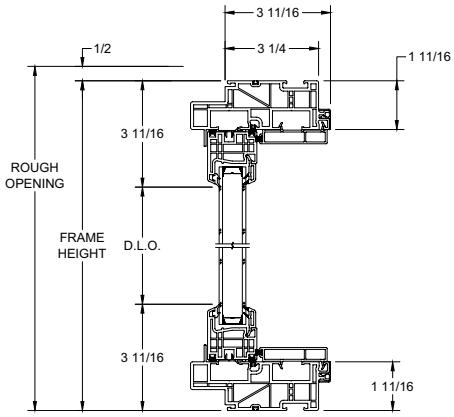

Horizontal Section

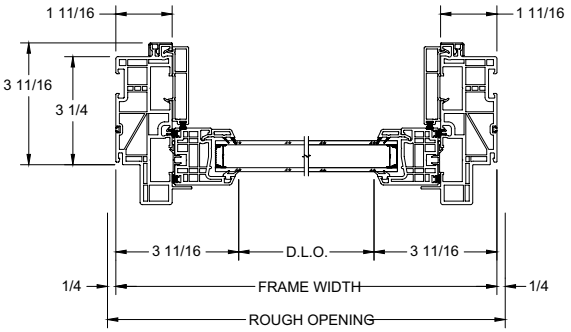

REPLACEMENT STUDIO WINDOWS – GLASTRA/WOOD

Vertical Section

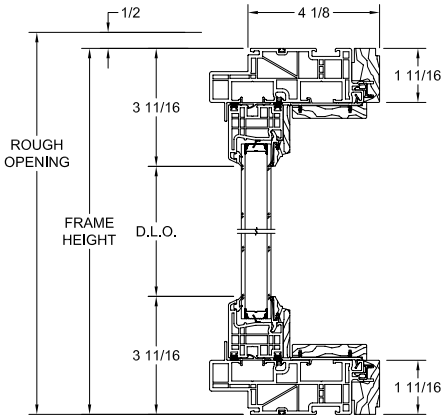

Horizontal Section

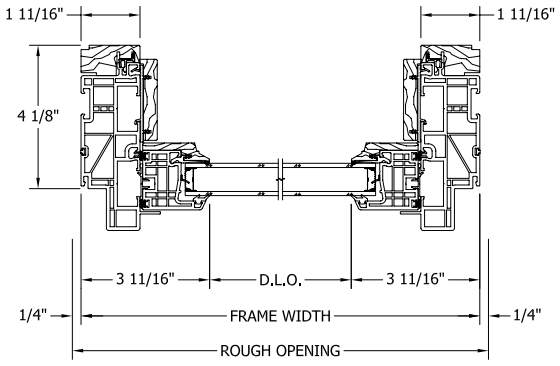

NOTE: Drawings are not to scale. For Forgent Series accessory drawings, see pg. 63. Additional and the most current drawings are available at **kolbewindows.com**

606 Carteret 66 of 121

SLIDING WINDOWS



SLIDING WINDOW STANDARD FEATURES

- All Glastra units with Cloud or Sahara integral color *(see pg. 58)*
- Flush frame groove filler for drywall return *(New Construction - no extension jamb)*
- Available as active-fixed or fixed-active
- Energy efficient, insulating Solar Low-E glass *(see pg. 60)*
- Equal glass sizing provides matching sight lines from sash to sash
- Dry glazed to the interior with beveled glazing bead
- Accessory grooves are integral to the extruded frames for the easy addition of accessories
- Integral 1-1/4" nailing fin provides easier installation and helps seal the window opening *(New Construction)*
- Full frame insect screen with BetterVue® fiberglass mesh and Water Shed Technology™ *(see screen finishes, pg. 62)*
- Stainless steel rollers for ease-of-operation
- Sash lock and tilt latches are color matched to the interior *(pg. 25)*
- Tilt latches placed at the top of the operable sash for ergonomic removal
- Pull handle on active sash is color matched to the interior *(only on All Glastra units; pg. 25)*

NOTE: All measurements are nominal.



ALL GLASTRA
NEW CONSTRUCTION SLIDING WINDOW
(interior)



ALL GLASTRA
NEW CONSTRUCTION SLIDING WINDOW
(exterior)

BetterVue® and Water Shed Technology™ are registered trademarks of PHIFER INCORPORATED.
Limitations may apply. Please consult your local Kolbe dealer for more details.

606 Carteret 67 of 121





SLIDING WINDOW OPTIONS

Glass (see pg. 60):

- Solar Gain Low-E
- Solar Control Low-E
- Solar Advanced Control Low-E
- Turtle Glass
- ThermaPlus™ Low-E
- Neat+™
- Triple pane
- Tinted, colored or patterned
- Tempered
- Laminated
- Preserve® Film
- Other options standard to the industry

Divided Lites (see pg. 61):

- Performance divided lites with 7/8", 1-1/8" or 2-1/4" bars
- Grilles-in-the-airspace

NOTE: All measurements are nominal.

Other Options:

- Replacement sliding windows
  (3-1/4" overall frame depth for All Glastra units, 4-1/8" for Glastra/Wood units)
- Glastra/Wood: Unfinished pine interior with no visible fasteners or wood exposed to the exterior
- Latex primed interior* *(Glastra/Wood units, see pg. 59)*
- Interior prefinishing *(Glastra/Wood units, see pg. 59)*
- Exterior acrylic film in Midnight or Bronze
  (available on All Glastra or Glastra/Wood units; see pg. 58)
- Interior acrylic film in Midnight or Bronze
  (only on All Glastra units with Midnight or Bronze exterior; see pg. 58)
- Multiple trim accessories *(shipped loose; see pg. 63)*
- Insect screen available with aluminum or UltraVue® mesh *(see screen finishes, pg. 62)*
- Half screen
- Extension jambs available in depths up to 9" overall
- Offset extension jambs
- Stepped frame groove filler for drywall return
  (no extension jamb)
- Glastra/Wood: Wood glazing bead receptor
- Galvanized steel installation clips
- Window Opening Control Device (WOCD) *(see pg. 62)*
- Sash limiters for safety *(non by-passable and does not meet WOCD requirements)*
- Impact performance modifications *(see pg. 65)*

*Latex primer is not a final finish.

HARDWARE (see hardware finishes, pg. 62):

A sash lock and tilt latches are applied to all sliding windows as standard.



SASH LOCK
(shown in Clay)



TILT LATCHES
(shown in Clay)

Also available: Satin Nickel | White | Matte Black | Rustic Umber



PULL HANDLE – ALL GLASTRA UNITS
(shown in White)

Also available: Clay | Matte Black | Rustic Umber

UltraVue® is a registered trademark of PHIFER INCORPORATED. Limitations may apply. Please consult your local Kolbe dealer for more details.
Finish colors will vary from printed images. Please make selections using actual color samples available from your local Kolbe dealer.
Not all hardware color options are availab

606 Carteret 68 of 121

SLIDING WINDOWS | Elevation Chart

NEW CONSTRUCTION SLIDING WINDOWS

F.S.	2'-11 1/2"	3'-5 1/2"	3'-11 1/2"	4'-5 1/2"	4'-11 1/2"	5'-11 1/2"
R.O.	3'-0"	3'-6"	4'-0"	4'-6"	5'-0"	6'-0"
A-G.S.	14 1/4"	17 1/4"	20 1/4"	23 1/4"	26 1/4"	32 1/4"
F-G.S.	14 1/4"	17 1/4"	20 1/4"	23 1/4"	26 1/4"	32 1/4"
1'-11 1/2" F.S. / 2'-0" R.O. / 18 3/32" A-G.S. / 18 3/32" F-G.S.	MNCSL 3020	MNCSL 3620	MNCSL 4020	MNCSL 4620	MNCSL 5020	MNCSL 6020
2'-5 1/2" F.S. / 2'-6" R.O. / 24 3/32" A-G.S. / 24 3/32" F-G.S.	MNCSL 3026	MNCSL 3626	MNCSL 4026	MNCSL 4626	MNCSL 5026	MNCSL 6026
2'-11 1/2" F.S. / 3'-0" R.O. / 30 3/32" A-G.S. / 30 3/32" F-G.S.	MNCSL 3030	MNCSL 3630	MNCSL 4030	MNCSL 4630	MNCSL 5030	MNCSL 6030*
3'-5 1/2" F.S. / 3'-6" R.O. / 36 3/32" A-G.S. / 36 3/32" F-G.S.	MNCSL 3036	MNCSL 3636	MNCSL 4036	MNCSL 4636	MNCSL 5036*	MNCSL 6036*
3'-11 1/2" F.S. / 4'-0" R.O. / 42 3/32" A-G.S. / 42 3/32" F-G.S.	MNCSL 3040	MNCSL 3640	MNCSL 4040	MNCSL 4640*	MNCSL 5040*	MNCSL 6040*
4'-5 1/2" F.S. / 4'-6" R.O. / 48 3/32" A-G.S. / 48 3/32" F-G.S.	MNCSL 3046	MNCSL 3646	MNCSL 4046	MNCSL 4646*	MNCSL 5046*	MNCSL 6046*
4'-11 1/2" F.S. / 5'-0" R.O. / 54 3/32" A-G.S. / 54 3/32" F-G.S.	MNCSL 3050	MNCSL 3650	MNCSL 4050	MNCSL 4650*	MNCSL 5050*	MNCSL 6050*
5'-5 1/2" F.S. / 5'-6" R.O. / 60 3/32" A-G.S. / 60 3/32" F-G.S.	MNCSL 3056	MNCSL 3656	MNCSL 4056	MNCSL 4656*	MNCSL 5056*	MNCSL 6056*
5'-11 1/2" F.S. / 6'-0" R.O. / 66 3/32" A-G.S. / 66 3/32" F-G.S.	MNCSL 3060	MNCSL 3660	MNCSL 4060	MNCSL 4660*	MNCSL 5060*	MNCSL 6060*

F.S. = Frame Size • R.O. = Rough Opening • A-G.S. = Active Glass Size • F-G.S. = Fixed Glass Size

*Units meet most national emergency escape and rescue requirements

NOTE: All measurements are nominal. Elevation charts are not to scale.

Divided lites are optional.

Some installation procedures will require a larger rough opening than noted (i.e. installations utilizing our installation clips), therefore, you may need to increase the rough opening size accordingly. Rough opening gaps may be increased up to a maximum of 1/2" on all sides and still be within good practice guidelines. The side jambs of slider units extend above the head jamb; additional space for the rough opening height may be necessary. For rough opening recommendations, see pg. 68.

606 Carteret 69 of 121

Cross Section Drawings

NEW CONSTRUCTION SLIDING WINDOWS – ALL GLASTRA

Vertical Section

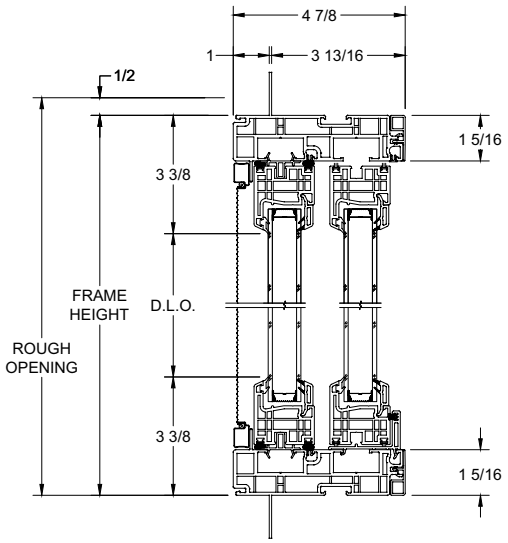

Horizontal Section

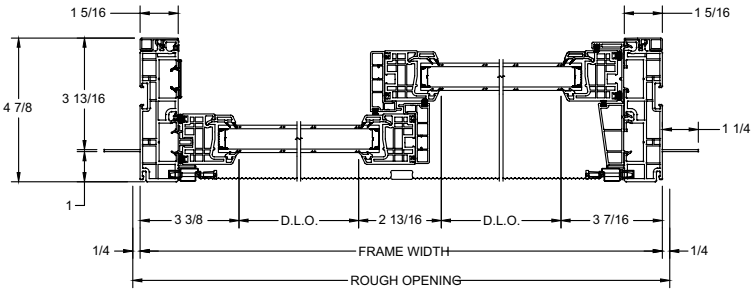

(Shown with optional flush frame filler)

NEW CONSTRUCTION SLIDING WINDOWS – GLASTRA/WOOD

Vertical Section

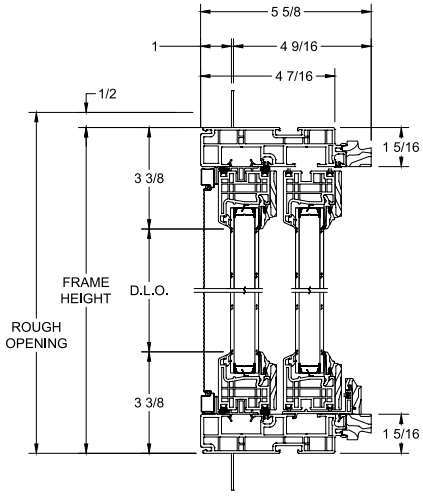

Horizontal Section

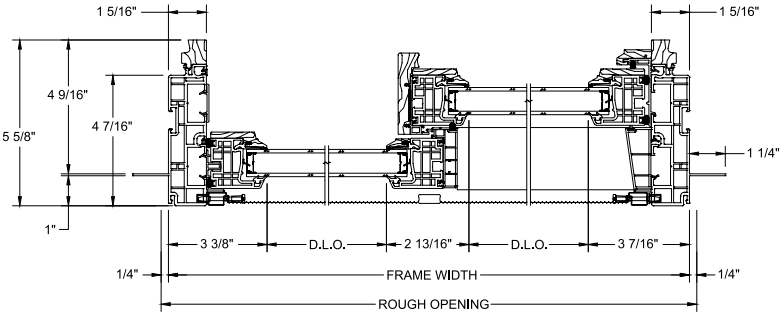

NOTE: Drawings are not to scale. For Forgent Series accessory drawings, see pg. 63. Additional and the most current drawings are available at **kolbewindows.com**

606 Carteret 70 of 121

REPLACEMENT SLIDING WINDOWS – ALL GLASTRA

Vertical Section

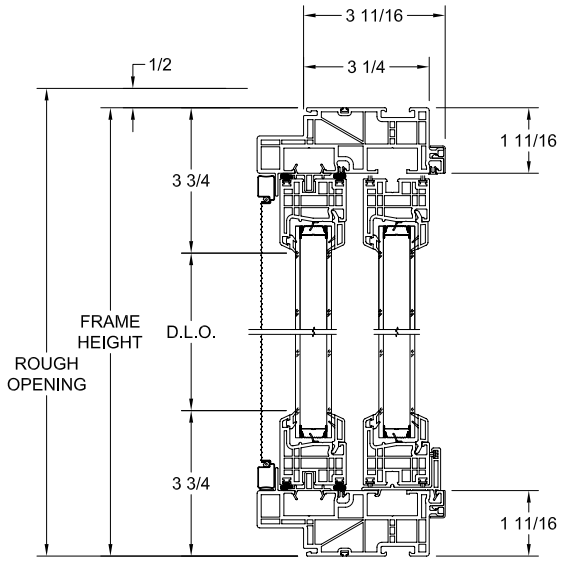

Horizontal Section

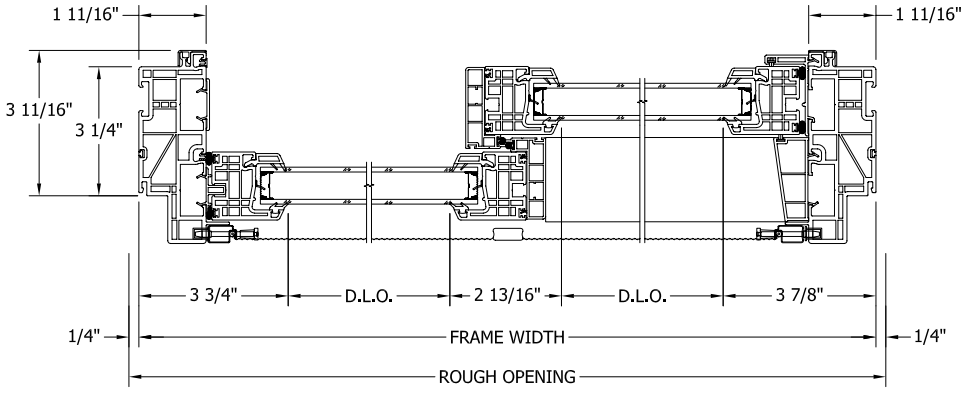

NOTE: Drawings are not to scale. For Forgent Series accessory drawings, see pg. 63. Additional and the most current drawings are available at **kolbewindows.com**

606 Carteret 71 of 121

REPLACEMENT SLIDING WINDOWS – GLASTRA/WOOD

Vertical Section

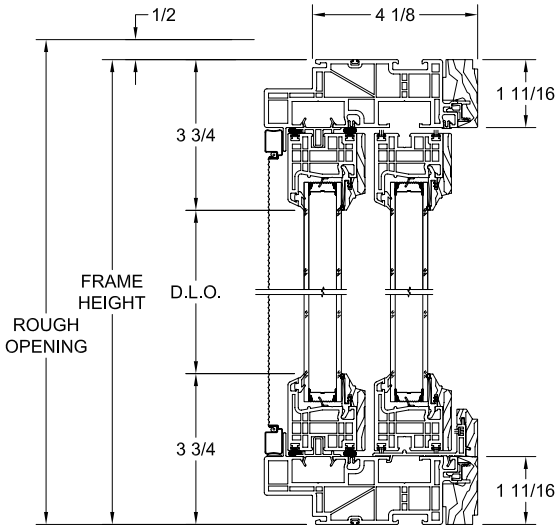

Horizontal Section

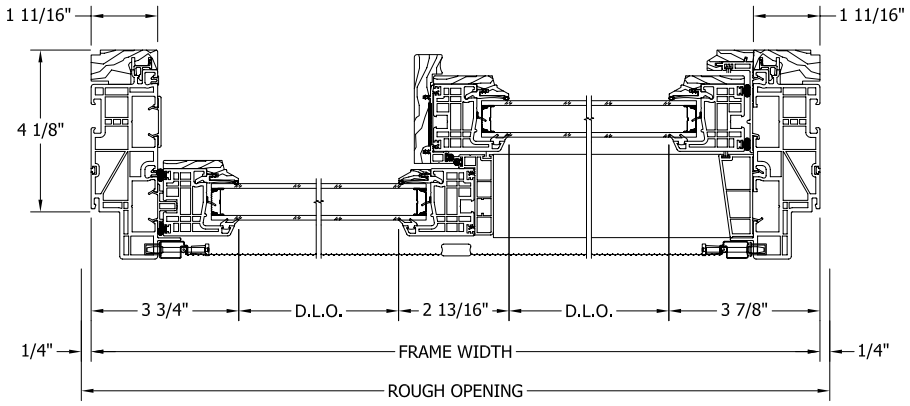

NOTE: Drawings are not to scale. For Forgent Series accessory drawings, see pg. 63. Additional and the most current drawings are available at **kolbewindows.com**

606 Carteret 72 of 121

DIRECT SETS



DIRECT SET STANDARD FEATURES

- All Glastra units with Cloud or Sahara integral color *(see pg. 58)*
- Casement and double hung direct set profiles available for a pleasing match
- Flush frame groove filler for drywall return
  (New Construction - no extension jamb)

NOTE: All measurements are nominal.

- Units designed to be mulled directly to other Forgent Series products, either in the factory or in the field
- Energy efficient, insulating Solar Low-E glass *(see pg. 60)*
- Dry glazed to the interior with a beveled bead
- Integral 1-1/4" nailing fin provides easier installation and helps seal the window opening



ALL GLASTRA
CASEMENT DIRECT SET
(interior)



ALL GLASTRA
CASEMENT DIRECT SET
(exterior)

606 Carteret 73 of 121





DIRECT SET OPTIONS

Glass (see pg. 60):

- Solar Gain Low-E
- Solar Control Low-E
- Solar Advanced Control Low-E
- Turtle Glass
- ThermaPlus™ Low-E
- Neat+™
- Triple pane
- Tinted, colored or patterned
- Tempered
- Laminated
- Preserve® Film
- Other options standard to the industry

Divided Lites (see pg. 61):

- Performance divided lites with 7/8", 1-1/8" or 2-1/4" bars
- Grilles-in-the-airspace

NOTE: All measurements are nominal.

Other Options:

- Replacement direct sets in casement and new construction double hung profiles
- Glastra/Wood: Unfinished pine interior
- Latex primed interior* *(Glastra/Wood units, see pg. 59)*
- Interior prefinishing *(Glastra/Wood units, see pg. 59)*
- Exterior acrylic film in Midnight or Bronze *(available on All Glastra or Glastra/Wood units; see pg. 58)*
- Interior acrylic film in Midnight or Bronze *(only on All Glastra units with Midnight or Bronze exterior; see pg. 58)*
- Extension jambs available in depths up to 9" overall
- Offset extension jambs
- Stepped frame groove filler for drywall return *(no extension jamb)*
- Glastra/Wood interior features square wood stops
- Multiple trim accessories *(shipped loose; see pg. 63)*
- Galvanized steel installation clips
- Impact performance modifications *(see pg. 65)*

*Latex primer is not a final finish.

606 Carteret 74 of 121

GEOMETRIC & RADIUS DIRECT SETS


© Photo courtesy Adamo Homes



GEOMETRIC & RADIUS DIRECT SET STANDARD FEATURES

- All Glastra units with Cloud or Sahara integral color *(see pg. 58)*
- Flush frame groove filler for drywall return *(New Construction - no extension jamb)*
- Units designed to be mulled directly to other Forgent Series products, either in the factory or in the field
- Energy efficient, insulating Solar Low-E glass *(see pg. 60)*
- Dry glazed to the interior with a beveled bead
- Integral 1-1/4" nailing fin provides easier installation and helps seal the window opening
- Standard radius shapes include: quarter circle, half circle, full circle, segment, quarter segment, with or without legs *(see specialty shapes, pg. 38)*
- Standard geometric shapes include: pentoid, trapezoid, right triangle, isosceles triangle, clipped corner, double clipped corner, octagon *(see specialty shapes, pg. 38)*

NOTE: All measurements are nominal.



GLASTRA/WOOD CASEMENT DIRECT SET
(interior)



GLASTRA/WOOD CASEMENT DIRECT SET
(exterior)

606 Carteret 75 of 121





GEOMETRIC & RADIUS DIRECT SET OPTIONS

Glass **(see pg. 60):**

- Solar Gain Low-E
- Solar Control Low-E
- Solar Advanced Control Low-E
- Turtle Glass
- ThermaPlus™ Low-E
- Neat+™
- Triple pane
- Tinted, colored or patterned
- Tempered
- Laminated
- Preserve® Film
- Other options standard to the industry

Divided Lites **(see pg. 61):**

- Performance divided lites with 7/8", 1-1/8" or 2-1/4" bars
- Grilles-in-the-airspace

NOTE: All measurements are nominal.

Other Options:

- Replacement direct sets in casement and new construction double hung profiles
- Casement and double hung direct set profiles available for a pleasing match
- Glastra/Wood: Unfinished pine interior
- Latex primed interior* *(Glastra/Wood units, see pg. 59)*
- Interior prefinishing *(Glastra/Wood units, see pg. 59)*
- Exterior acrylic film in Midnight or Bronze *(available on All Glastra or Glastra/Wood units; see pg. 58)*
- Interior acrylic film in Midnight or Bronze *(only on All Glastra units with Midnight or Bronze exterior; see pg. 58)*
- Extension jambs available in depths up to 9" overall
- Offset extension jambs
- Stepped frame groove filler for drywall return *(no extension jamb)*
- Glastra/Wood interior features square wood stops
- Multiple trim accessories *(shipped loose; see pg. 63)*
- Galvanized steel installation clips
- Impact performance modifications *(see pg. 65)*

*Latex primer is not a final finish.

606 Carteret 76 of 121

DIRECT SETS | Elevation Chart

CASEMENT PROFILE DIRECT SETS

U.D.			1' 5-1/2"	1' 11-1/2"	2' 5-1/2"	2' 11-1/2"	3' 5-1/2"	3' 11-1/2"	4' 11-1/2"	5' 11-1/2"
	R.O.		1' 6"	2' 0"	2' 6"	3' 0"	3' 6"	4' 0"	5' 0"	6' 0"
		G.S.	14 13/16"	20 13/16"	26 13/16"	32 13/16"	38 13/16"	44 13/16"	56 13/16"	68 13/16"
11-1/2"	1' 0"	8 13/16"	 MCST 1610	 MCST 2010	 MCST 2610	 MCST 3010	 MCST 3610	 MCST 4010	 MCST 5010	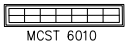 MCST 6010
1' 5-1/2"	1' 6"	14 13/16"	 MCST 1616	 MCST 2016	 MCST 2616	 MCST 3016	 MCST 3616	 MCST 4016	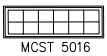 MCST 5016	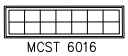 MCST 6016
1' 11-1/2"	2' 0"	20 13/16"	 MCST 1620	 MCST 2020	 MCST 2620	 MCST 3020	 MCST 3620	 MCST 4020	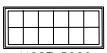 MCST 5020	 MCST 6020
2' 5-1/2"	2' 6"	26 13/16"	 MCST 1626	 MCST 2026	 MCST 2626	 MCST 3026	 MCST 3626	 MCST 4026	 MCST 5026	 MCST 6026
2' 11-1/2"	3' 0"	32 13/16"	 MCST 1630	 MCST 2030	 MCST 2630	 MCST 3030	 MCST 3630	 MCST 4030	 MCST 5030	 MCST 6030
3' 5-1/2"	3' 6"	38 13/16"	MCST 1636	MCST 2036	MCST 2636	MCST 3036	MCST 3636	MCST 4036	MCST 5036	MCST 6036
3' 11-1/2"	4' 0"	44 13/16"	MCST 1640	MCST 2040	MCST 2640	MCST 3040	MCST 3640	MCST 4040	MCST 5040	MCST 6040
4' 5-1/2"	4' 6"	50 13/16"	MCST 1646	MCST 2046	MCST 2646	MCST 3046	MCST 3646	MCST 4046	MCST 5046	MCST 6046
4' 11-1/2"	5' 0"	56 13/16"	MCST 1650	MCST 2050	MCST 2650	MCST 3050	MCST 3650	MCST 4050	MCST 5050	MCST 6050
5' 5-1/2"	5' 6"	62 13/16"	MCST 1656	MCST 2056	MCST 2656	MCST 3056	MCST 3656	MCST 4056	MCST 5056	MCST 6056
5' 11-1/2"	6' 0"	68 13/16"	MCST 1660	MCST 2060	MCST 2660	MCST 3060	MCST 3660	MCST 4060	MCST 5060	MCST 6060

U.D. = Unit Dimension • R.O. = Rough Opening • G.S. = Glass Size

NOTE: All measurements are nominal. Elevation charts are not to scale.

The units shown are stand-alone units. Adjustments may be required when stacking over other units; adjustments will be made in the factory.

Divided lites are optional.

Some installation procedures will require a larger rough opening than noted (i.e. installations utilizing our installation clips), therefore, you may need to increase the rough opening size accordingly. Rough opening gaps may be increased up to a maximum of 1/2" on all sides and still be within good practice guidelines. For rough opening recommendations, see pg. 68.

606 Carteret 77 of 121

NEW CONSTRUCTION DOUBLE HUNG PROFILE DIRECT SETS

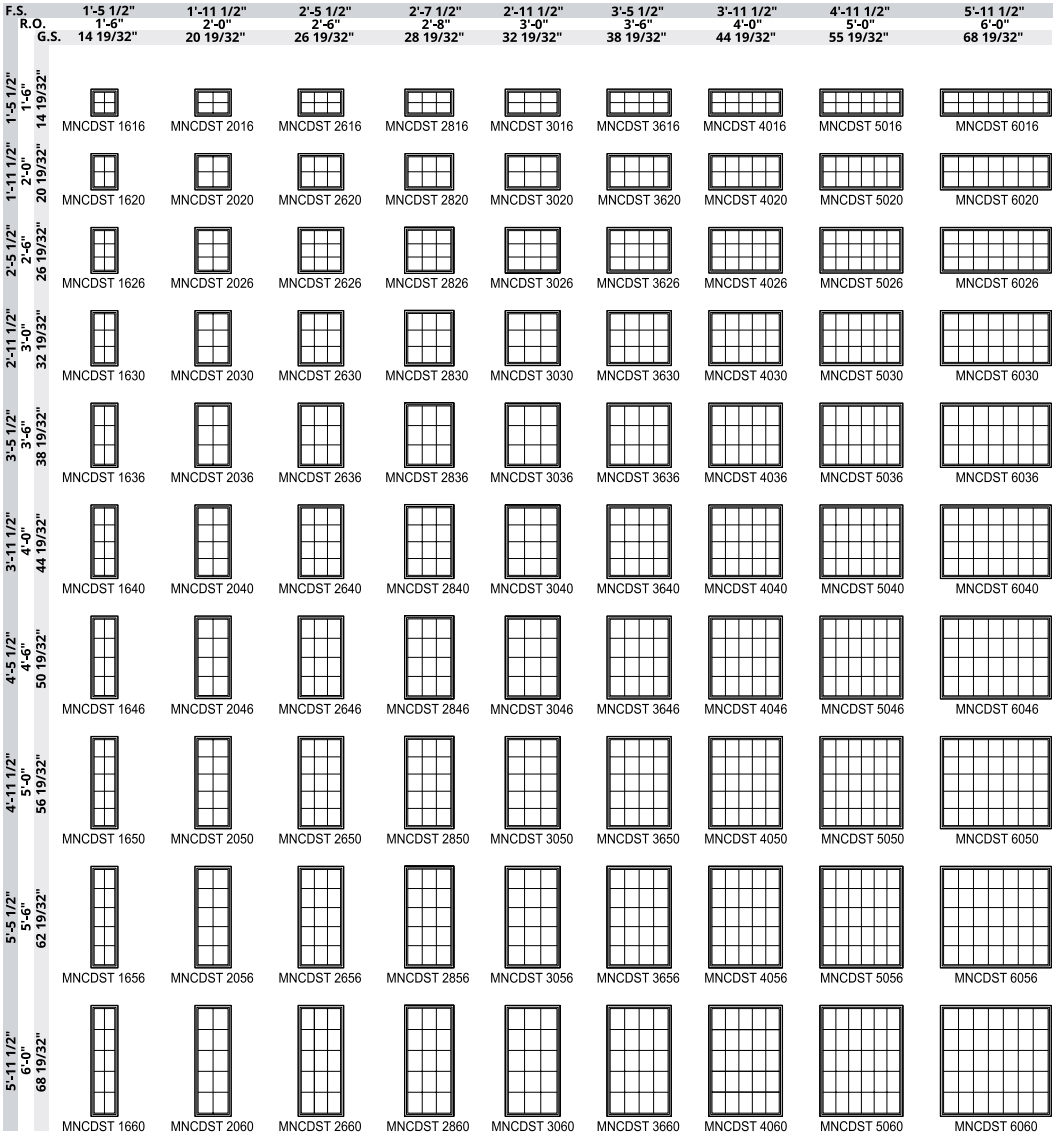

F.S. = Frame Size • R.O. = Rough Opening • G.S. = Glass Size

NOTE: All measurements are nominal. Elevation charts are not to scale.

The units shown are stand-alone units. Adjustments may be required when stacking over other units; adjustments will be made in the factory.

Divided lites are optional.

Some installation procedures will require a larger rough opening than noted (i.e. installations utilizing our installation clips), therefore, you may need to increase the rough opening size accordingly. Rough opening gaps may be increased up to a maximum of 1/2" on all sides and still be within good practice guidelines. For rough opening recommendations, see pg. 68.

606 Carteret 78 of 121

DIRECT SETS | Cross Section Drawings

ALL GLASTRA
CASEMENT PROFILE DIRECT SETS

Vertical Section

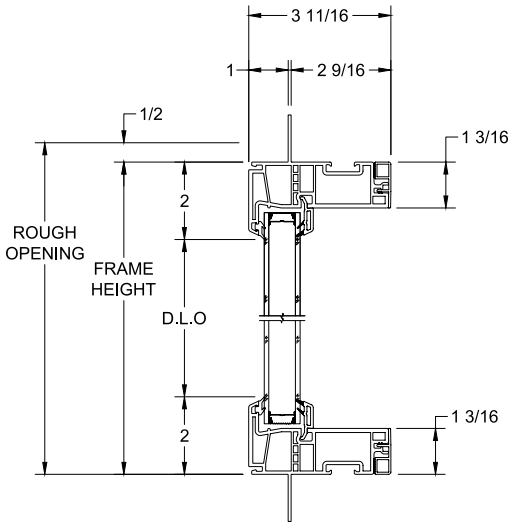

Horizontal Section

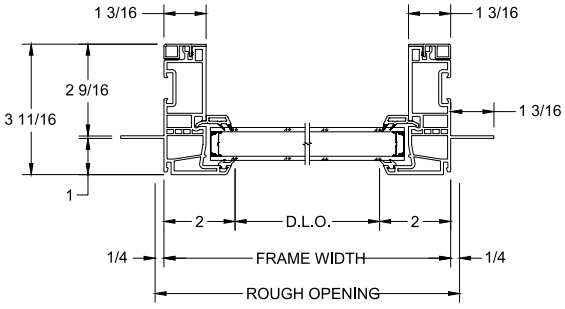

(Shown with optional flush frame filler)

GLASTRA/WOOD
CASEMENT PROFILE DIRECT SETS

Vertical Section

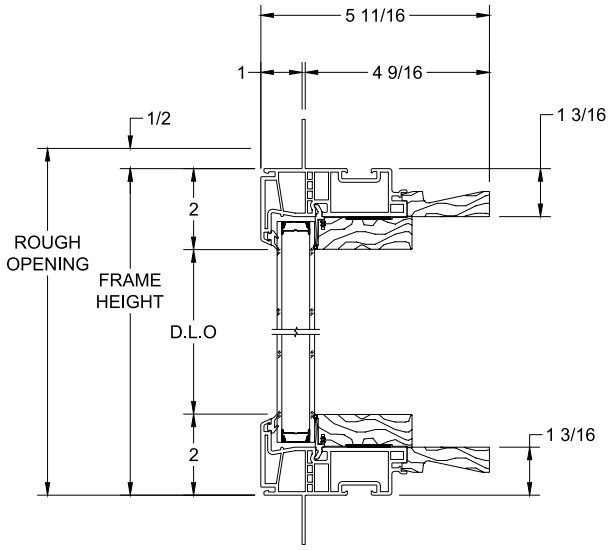

Horizontal Section

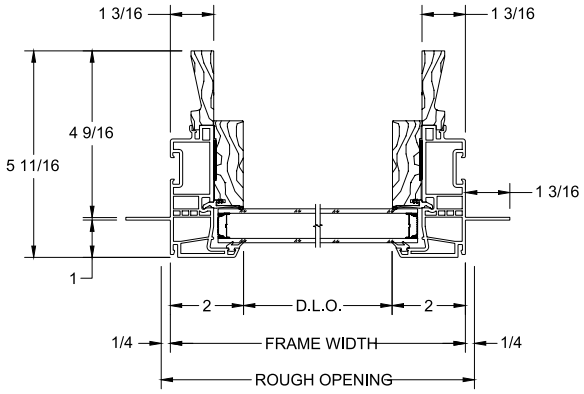

NOTE: Drawings are not to scale. For Forgent Series accessory drawings, see pg. 63. Additional and the most current drawings are available at **kolbewindows.com**

606 Carteret 79 of 121

ALL GLASTRA
NEW CONSTRUCTION DOUBLE HUNG PROFILE DIRECT SETS

Vertical Section

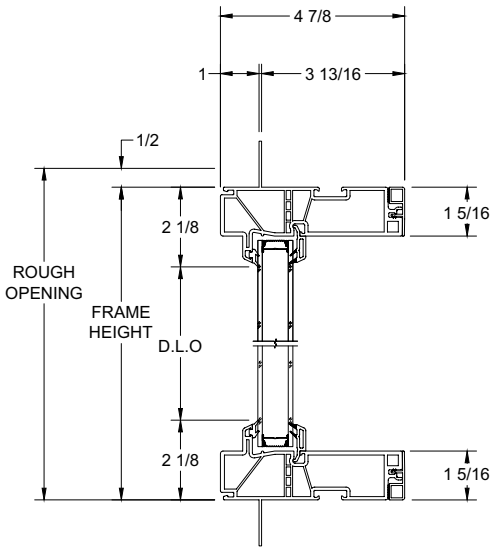

Horizontal Section

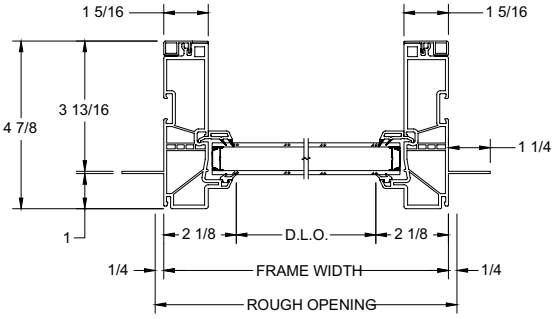

(Shown with optional flush frame filler)

GLASTRA/WOOD
NEW CONSTRUCTION DOUBLE HUNG PROFILE DIRECT SETS

Vertical Section

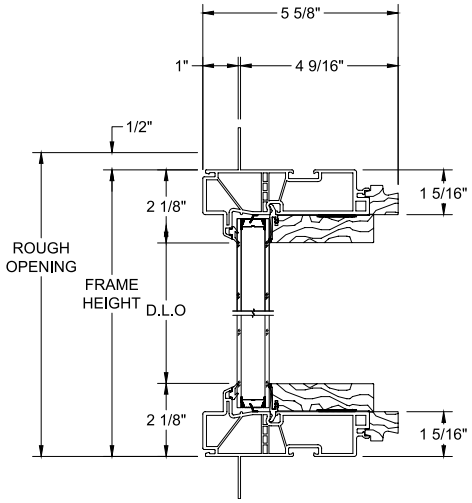

Horizontal Section

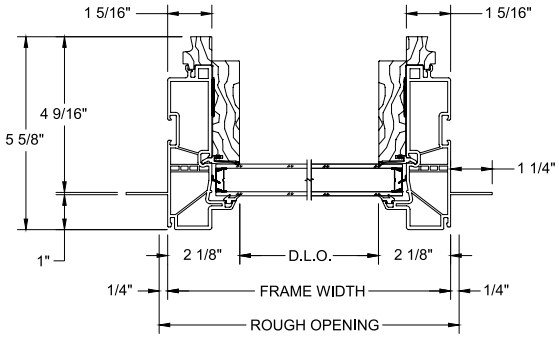

NOTE: Drawings are not to scale. For Forgent Series accessory drawings, see pg. 63. Additional and the most current drawings are available at **kolbewindows.com**

606 Carteret 80 of 121

DIRECT SETS | Specialty Shapes



Segment



Segment
w/o legs

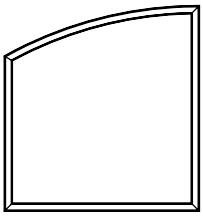

Quarter
Segment

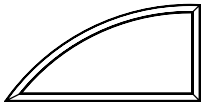

Quarter Segment
w/o legs

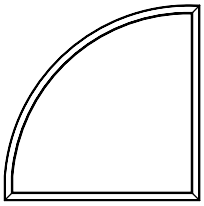

Quarter
Circle

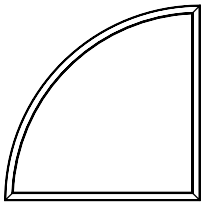

Quarter Circle
w/o legs

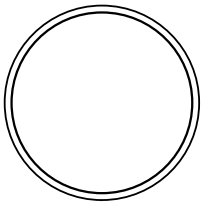

Full Circle*

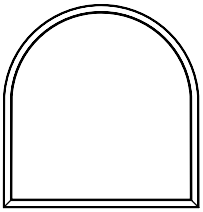

Half Circle



Half Circle
w/o legs

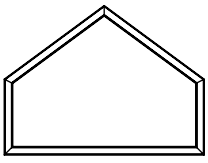

Pentoid

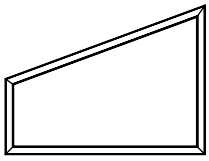

Trapezoid

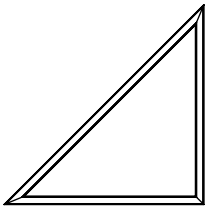

Right Triangle

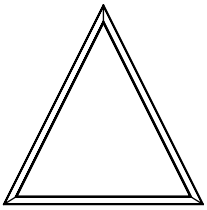

Isosceles Triangle

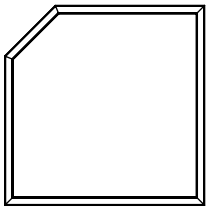

Clipped Corner

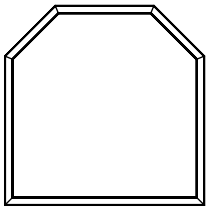

Double Clipped
Corner

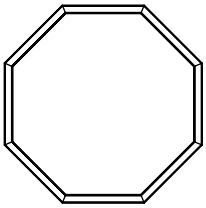

Octagon

*Full Circle is only available in All Glastra.

606 Carteret 81 of 121



© Spacecrafting Photography,
Denali Custom Homes, Redstone Interiors

606 Carteret 82 of 121



606 Carteret 83 of 121

© Spacecrafting



FORGENT COMPLEMENTARY DOORS

In addition to various window styles, the Forgent Series also includes complementary swinging and sliding doors. These doors complement other Forgent Series products, and offer the same aesthetic options and lead times, so builders can get all of the windows and doors needed for their project.



606 Carteret 84 of 121

COMPLEMENTARY SLIDING DOORS

ALL GLASTRA | GLASTRA/WOOD



SLIDING DOOR STANDARD FEATURES – COMPLEMENT ALL GLASTRA UNITS

- Cloud or Sahara interior and exterior color *(see pg. 58)*
- Standard jamb width is 5-15/16" *(4-9/16" behind the nailing fin)*
- Energy efficient, tempered Solar Low-E glass *(see pg. 60)*
- Dry glazed to the interior
- Accessory grooves are integral to the extruded frames for easy addition of accessories
- Frame setup for 2-wide doors
- Equal glass sizing provides matching sight lines from panel to panel
- Steel panel reinforcement for rigidity
- Stainless steel panel rollers
- Insect screen with BetterVue® fiberglass mesh and Water Shed Technology™ in extruded aluminum frame
- Allure dual-point handle set in White
- Low-profile, aluminum-capped self-draining sill in Bronze anodized

SLIDING DOOR OPTIONS – COMPLEMENT ALL GLASTRA UNITS

Glass (see full list, pg. 60)

Divided Lites (see pg. 61):

- Performance divided lites with 7/8", 1-1/8" or 2-1/4" bars
- Grilles-in-the-airspace

NOTE: All measurements are nominal.

Other Options:

- Exterior acrylic film in Midnight or Bronze *(see pg. 58)*
- Interior acrylic film in Midnight or Bronze *(only on All Glastra units with Midnight or Bronze exterior; see pg. 58)*
- Signature handle set
- Square handle set
- Secondary security lock *(foot bolt)*
- Galvanized steel installation clips
- Impact performance modifications *(see pg. 65)*
- Three-point lock mechanism

HARDWARE – COMPLEMENT ALL GLASTRA UNITS (see hardware finishes, pg. 62):

Allure, Signature, and Square handle sets are available for sliding doors in the finishes below.



ALLURE HANDLE SET

(shown in White)
Standard on All Glastra

Also available: Clay



SIGNATURE HANDLE SET

(shown in Satin Nickel PVD†)

Also available: Matte Black | Rustic Umber



SQUARE HANDLE SET

(shown in Satin Nickel PVD†)

Also available: White | Matte Black | Rustic Umber

*PVD (Physical Vapor Deposition) finish is an application over the color which helps protect the finish from tarnishing, peeling and cracking.
Finish colors will vary from printed images. Please make selections using actual color samples available from your local Kolbe dealer.
Not all hardware color options are available on all products.

BetterVue® and Water Shed Technology™ are registered trademarks of PHIFER INCORPORATED.
Limitations may apply. Please consult your local Kolbe dealer for more details.

606 Carteret 85 of 121

SLIDING DOOR STANDARD FEATURES – COMPLEMENT GLASTRA/WOOD UNITS

- Extruded aluminum alloy clad frame and panel
- Frame corners are mitered or profile cut, with internal corner and end keys
- Unfinished pine interior, with pine interior stops and wood mull casings on mulled units
- Exterior wood parts are treated
- Standard jamb width is 4-9/16"
- 3" wide stiles and rails
- Frame set up
- Energy efficient, tempered Solar Low-E glass *(see pg. 60)*
- Glazed to the interior with beveled wood glazing beads
- Accessory grooves are integral to the extruded frames for easy addition of accessories
- Tandem rollers with adjustable, ball-bearing wheels carry the sliding panel
- Insect screen BetterVue® fiberglass mesh and Water Shed Technology™ in extruded aluminum frame
- Multi-point handle set with bell escutcheon in Bright Brass PVD*
- One-piece, pultruded fiberglass sill with continuous aluminum sill nosing and fiberglass sill filler
- Thick oak interior threshold
- Heavy vinyl nailing fins with head drip caps

Limited sizes are available.

SLIDING DOOR OPTIONS – COMPLEMENT GLASTRA/WOOD UNITS

Glass (see full list, pg. 60):

Divided Lites (see pg. 61):

- Performance divided lites with 7/8", 1-1/8" or 2-1/4" bars
- Grilles-in-the-airspace

Other Options:

- Latex primed interior** *(see pg. 59)*
- Interior prefinishing *(see pg. 59)*
- Midnight or Bronze exterior color *(see pg. 58)*
- Extruded aluminum accessories applied to accessory grooves on the exterior frame *(see pg. 63)*

Other Options (continued)

- Multi-point handle set with arch escutcheon
- Single-point Allure handle set
- Keyed lock
- Secondary security lock
- Corrosion-resistant hardware
- Insect screen with UltraVue® fiberglass mesh or aluminum mesh *(see pg. 62)*
- Extension jambs in a wide variety of sizes *(shipped loose for field application)*
- Galvanized steel installation clips
- Impact performance modifications *(see pg. 65)*

NOTE: All measurements are nominal.
**Latex primer is not a final finish.

HARDWARE – COMPLEMENT GLASTRA/WOOD UNITS (see hardware finishes, pg. 62):

Multi-point handle sets with bell and arch escutcheons, and single-point Allure handle sets are available for sliding doors in the finishes below.



BELL ESCUTCHEON HANDLE SET

(shown in Bright Brass PVD†)
Standard on Glastra/Wood



ARCH ESCUTCHEON HANDLE SET

(shown in Bright Brass PVD†)

Also available:
Satin Nickel PVD† | Smoky Gray PVD†
Matte Black | Rustic Umber



ALLURE HANDLE SET

(shown in Satin Nickel)

Also available:
White | Matte Black | Rustic Umber



SINGLE-POINT HANDLE

(shown in Satin Nickel)

Also available:
Bright Brass | Matte Black
Rustic Umber

*PVD (Physical Vapor Deposition) finish is an application over the color which helps protect the finish from tarnishing, peeling and cracking.
Finish colors will vary from printed images. Please make selections using actual color samples available from your local Kolbe dealer.
Not all hardware color options are available on all products.

BetterVue®, UltraVue® and Water Shed Technology™ are registered trademarks of PHIFER INCORPORATED.
Limitations may apply. Please consult your local Kolbe dealer for more details.

606 Carteret 86 of 121

SLIDING DOORS | Elevation Charts

SLIDING DOORS – COMPLEMENT ALL GLASTRA UNITS

U.D.			4' 11-1/2"	5' 11-1/2"	7' 11-1/2"	8' 11-1/2"	11' 11-1/2"
	R.O.		5' 0"	6' 0"	8' 0"	9' 0"	12' 0"
		G.S.	24 5/8"	30 5/8"	42 5/8"	30 5/16"	31 1/8"
6' 7-1/2"	6' 8"	70"	 V4PD 5068	 V4PD 6068	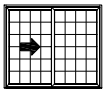 V4PD 8068	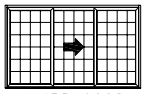 V4PD 9068	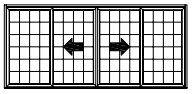 V4PD 12068
6' 9-1/2"	6' 10"	72"	 V4PD 50610	 V4PD 60610	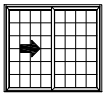 V4PD 80610	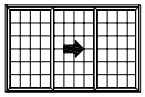 V4PD 90610	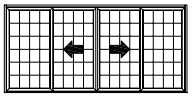 V4PD 120610
7' 11-1/2"	8' 0"	92"	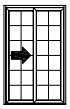 V4PD 5080	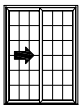 V4PD 6080	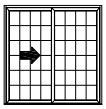 V4PD 8080	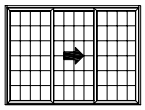 V4PD 9080	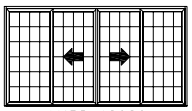 V4PD 12080

U.D. = Unit Dimension • R.O. = Rough Opening • G.S. = Glass Size (Glass sizes are shown per panel.)

NOTE: All measurements are nominal. Elevation charts are not to scale.

Divided lites are optional. The configuration shown for a single panel is typical for each panel.

Some installation procedures will require a larger rough opening than noted (i.e. installations utilizing our installation clips), therefore, you may need to increase the rough opening size accordingly. Rough opening gaps may be increased up to a maximum of 1/2" on all sides and still be within good practice guidelines. For rough opening recommendations, see pg. 68.

606 Carteret 87 of 121

SLIDING DOORS – COMPLEMENT GLASTRA/WOOD UNITS

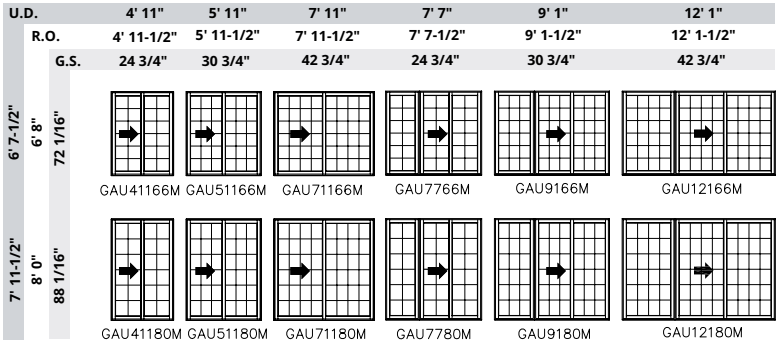

U.D. = Unit Dimension • R.O. = Rough Opening • G.S. = Glass Size (Glass sizes are shown per panel.)

NOTE: All measurements are nominal. Elevation charts are not to scale.

Divided lites are optional. The configuration shown for a single panel is typical for each panel.

Some installation procedures will require a larger rough opening than noted (i.e. installations utilizing our installation clips), therefore, you may need to increase the rough opening size accordingly. Rough opening gaps may be increased up to a maximum of 1/2" on all sides and still be within good practice guidelines. For rough opening recommendations, see pg. 68.

606 Carteret 88 of 121

SLIDING DOORS | Cross Section Drawings

SLIDING DOORS – COMPLEMENT ALL GLASTRA UNITS

Vertical Section

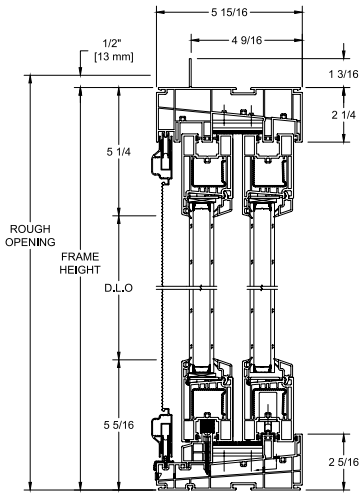

Horizontal Section

2-wide (Active-Fixed)

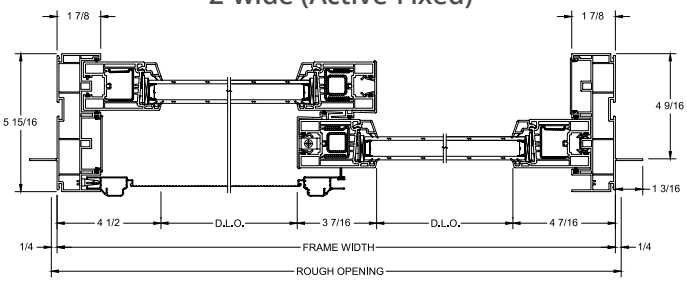

3-wide (Active-Fixed-Fixed)

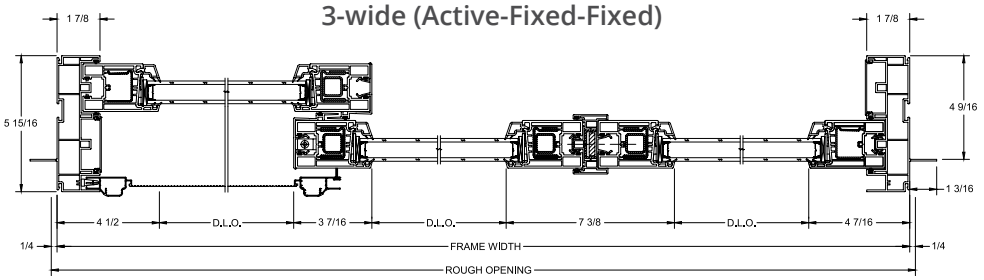

3-wide (Fixed-Active-Fixed)

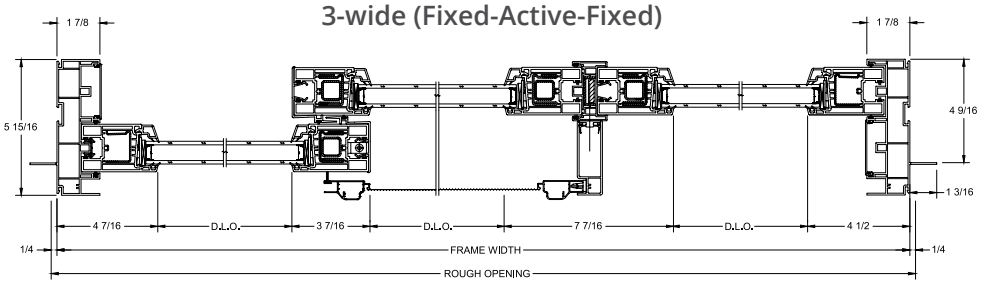

4-wide (Fixed-Active-Active-Fixed)

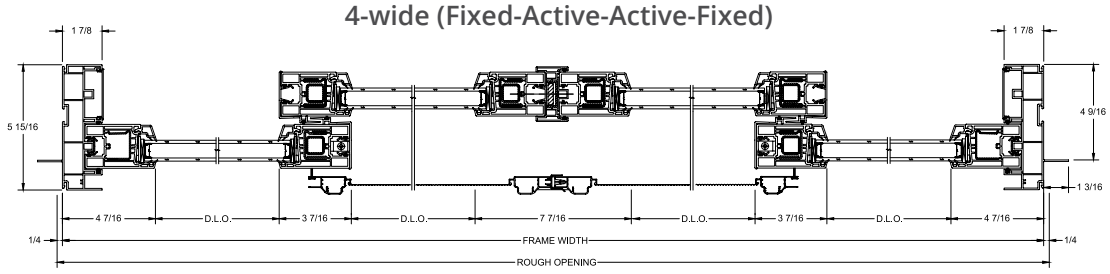

NOTE: Drawings are not to scale. For Forgent Series accessory drawings, see pg. 63. Additional and the most current drawings are available at **kolbewindows.com**

606 Carteret 89 of 121

SLIDING DOORS – COMPLEMENT GLASTRA/WOOD UNITS

Vertical Section

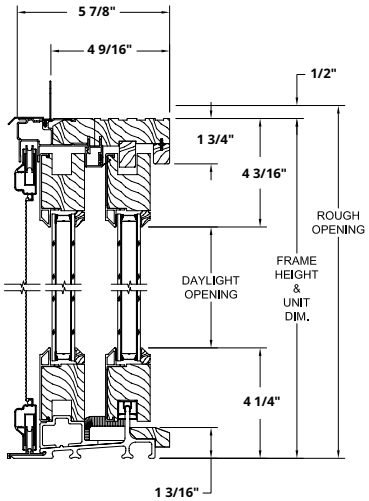

Horizontal Section

2-wide

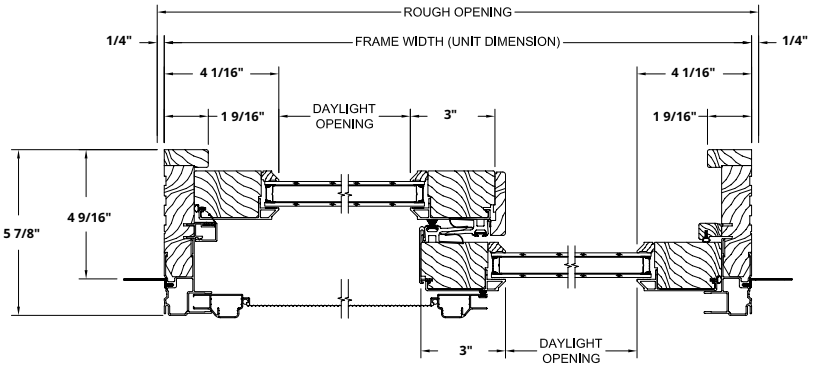

3-wide

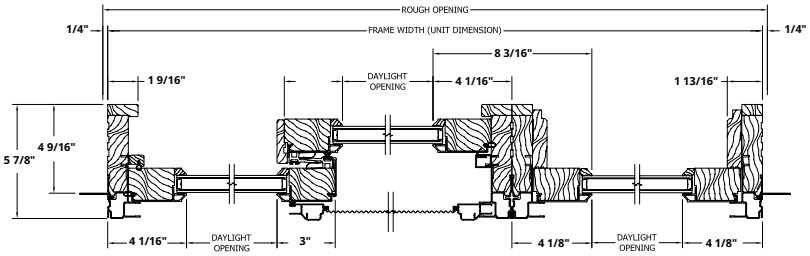

NOTE: Drawings are not to scale. For Forgent Series accessory drawings, see pg. 63. Additional and the most current drawings are available at **kolbewindows.com**

606 Carteret 90 of 121

COMPLEMENTARY
INSWING DOORS



COMPLEMENTARY INSWING DOOR STANDARD FEATURES

- Extruded aluminum alloy clad frame and panel
- Frame corners are mitered or profile cut, with internal corner and end keys
- Cloud or Sahara exterior color *(see pg. 58)*
- Unfinished pine interior with pine interior stops and wood mull casings on mulled units
- Exterior wood parts are treated
- Standard jamb width is 4-9/16"
- Stiles and top rails are a nominal 4-5/8" wide; bottom rail is a nominal 7-9/16" high
- Energy efficient, tempered Solar Low-E glass *(see pg. 60)*
- Glazed to the interior with beveled wood glazing beads
- Accessory grooves are integral to the extruded frames for easy addition of accessories
- Sliding screen* with BetterVue® fiberglass mesh and Water Shed Technology™ in extruded aluminum frame to match the exterior
- Stainless steel multi-point locking hardware on single door panels; French doors have a multi-point lock on the active panel and a dual-point lock on the less active panel
- Toronto handle set in Bright Brass PVD** *(pg. 49)*
- Adjustable hinges in Gold Painted *(pg. 49)*
- Bronze anodized aluminum self-draining sill with an oak interior threshold
- Heavy vinyl nailing fins with head drip caps
- Full lite only

NOTE: All measurements are nominal.

*A sliding screen is available only on two-panel doors with one stationary and one active panel.

**PVD (Physical Vapor Deposition) finish is an application over the color which helps protect the finish from tarnishing, peeling and cracking.

BetterVue® and Water Shed Technology™ are registered trademarks of PHIFER INCORPORATED.

Limitations may apply. Please consult your local Kolbe dealer for more details.

606 Carteret 91 of 121


Photo courtesy of Stacy Zarin-Goldberg


© Spacecrafting Photography, Denali Custom Homes, Redstone Interiors

COMPLEMENTARY INSWING DOOR OPTIONS

Glass (see pg. 60):

- Solar Gain Low-E
- Solar Control Low-E
- Solar Advanced Control Low-E
- Turtle Glass
- ThermaPlus™ Low-E
- Neat+™
- Triple pane
- Tinted, colored or patterned
- Tempered
- Laminated
- Preserve® Film
- Other options standard to the industry

Divided Lites (see pg. 61):

- Performance divided lites with 7/8", 1-1/8" or 2-1/4" bars
- Grilles-in-the-airspace

NOTE: All measurements are nominal.

Other Options:

- Latex primed interior* *(Glastra/Wood units, see pg. 59)*
- Interior prefinishing *(Glastra/Wood units, see pg. 59)*
- Midnight or Bronze exterior color *(see pg. 58)*
- Extruded aluminum accessories applied to accessory grooves on the exterior frame *(see pg. 63)*
- München handle set *(not available on doors with 3" wide stiles)*
- No lock with boring 2 holes – 2-1/8" and 1-1/2"
- 6-9/16" extension jamb
- Galvanized steel installation clips

*Latex primer is not a final finish.

HARDWARE (see hardware finishes, pg. 62):

Toronto and München lever style handle sets with adjustable hinges and multi-point locks are available for inswing doors. Single point locks and keyed handle sets are optional.



TORONTO HANDLE SET
(shown in Bright Brass PVD†)
Standard



MÜNCHEN HANDLE SET
(shown in Bright Brass PVD†)



ADJUSTABLE HINGES
(shown in Gold Painted)
Standard

Also available: Satin Nickel PVD‡ | Smoky Gray PVD‡ | Matte Black | Rustic Umber

*PVD (Physical Vapor Deposition) finish is an application over the color which helps protect the finish from tarnishing, peeling and cracking. Finish colors will vary from printed images. Please make selections using actual color samples available from your local Kolbe dealer. Not all hardware color options are available on all products.

606 Carteret 92 of 121

INSWING DOORS | Elevation Chart

COMPLEMENTARY INSWING DOORS

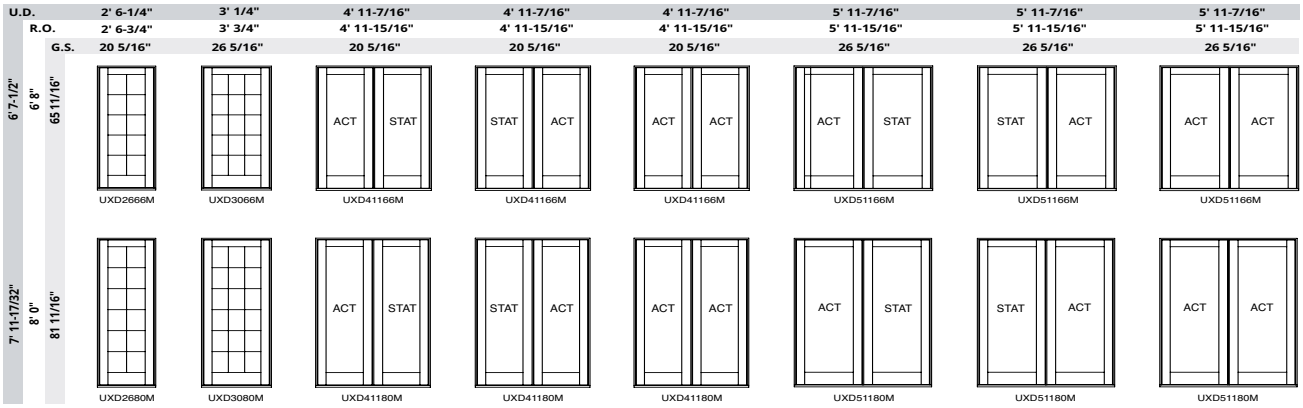

Operation is viewed from the interior.

U.D. = Unit Dimension • R.O. = Rough Opening • G.S. = Glass Size

NOTE: All measurements are nominal. Elevation charts are not to scale. Operation is viewed from the interior. When ordering, specify inswing. If you are ordering a single unit, specify stationary, hinged left or hinged right. Double-wide doors are also available as French units, with no fixed astragal between the door panels. Specify French when ordering.

Some installation procedures will require a larger rough opening than noted (i.e. installations utilizing our installation clips), therefore, you may need to increase the rough opening size accordingly. Rough opening gaps may be increased up to a maximum of 1/2" on all sides and still be within good practice guidelines. For rough opening recommendations, see pg. 68.

606 Carteret 93 of 121

COMPLEMENTARY INSWING DOORS

Vertical Section

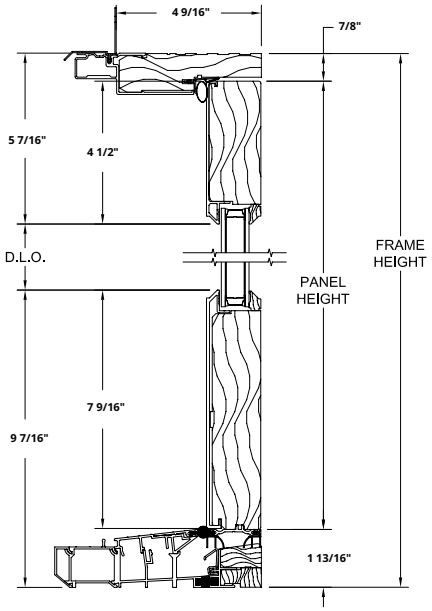

Horizontal Section

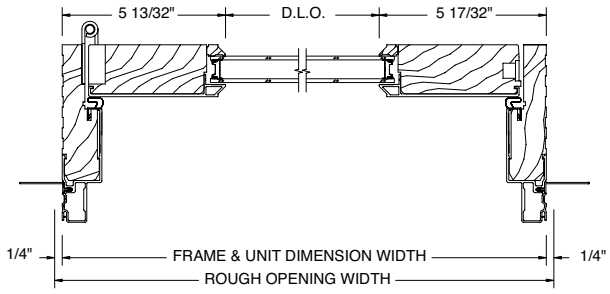

COMPLEMENTARY INSWING FRENCH DOORS

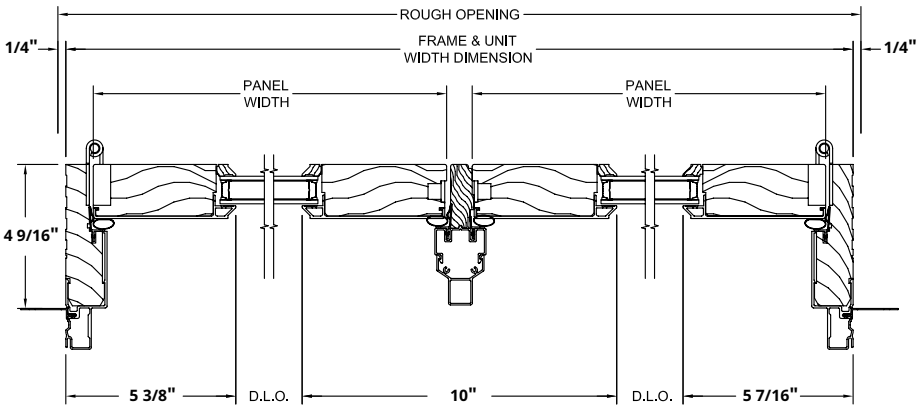

NOTE: Drawings are not to scale. For Forgent Series accessory drawings, see pg. 63. Additional and the most current drawings are available at **kolbewindows.com**

606 Carteret 94 of 121

COMPLEMENTARY
OUTSWING DOORS



COMPLEMENTARY OUTSWING DOOR STANDARD FEATURES

- Extruded aluminum alloy clad frame and panel
- Frame corners are mitered or profile cut, with internal corner and end keys
- Cloud or Sahara exterior color *(see pg. 58)*
- Unfinished pine interior, with pine interior stops and wood mull casings on mulled units
- Exterior wood parts are treated
- Standard jamb width is 4-9/16"
- Stiles and top rails are 4-5/8" wide; bottom rail is 7-9/16" high
- Energy efficient, tempered Solar Low-E glass *(see pg. 60)*
- Glazed to the interior with beveled wood glazing beads
- Accessory grooves are integral to the extruded frames for easy addition of accessories
- Stainless steel multi-point locking hardware on single door panels; French doors have a multi-point lock on the active panel and a dual-point lock on the less active panel
- Toronto handle set in Bright Brass PVD* *(pg. 53)*
- Adjustable hinges in Gold Painted *(pg. 53)*
- Bronze anodized aluminum bumper sill with an oak interior threshold
- Heavy vinyl nailing fins with head drip caps
- Full lite only

NOTE: All measurements are nominal.
Limited sizes are available.

*PVD (Physical Vapor Deposition) finish is an application over the color which helps protect the finish from tarnishing, peeling and cracking.

606 Carteret 95 of 121





COMPLEMENTARY OUTSWING DOOR OPTIONS

Glass (see pg. 60):

- Solar Gain Low-E
- Solar Control Low-E
- Solar Advanced Control Low-E
- Turtle Glass
- ThermaPlus™ Low-E
- Neat+™
- Triple pane
- Tinted, colored or patterned
- Tempered
- Laminated
- Preserve® Film
- Other options standard to the industry

Divided Lites (see pg. 61):

- Performance divided lites with 7/8", 1-1/8" or 2-1/4" bars
- Grilles-in-the-airspace

NOTE: All measurements are nominal.

Other Options:

- Latex primed interior*(*Glastra/Wood units, see pg. 59*)
- Interior prefinishing (*Glastra/Wood units, see pg. 59*)
- Midnight or Bronze exterior color (*see pg. 58*)
- Extruded aluminum accessories applied to accessory grooves on the exterior frame (*see pg. 63*)
- München handle set (*not available on doors with 3" wide stiles*)
- No lock with boring 2 holes – 2-1/8" and 1-1/2"
- Extension jambs (*up to 12" applied, over 12" shipped loose for field application*)
- Galvanized steel installation clips

*Latex primer is not a final finish.

HARDWARE (see hardware finishes, pg. 62):

Toronto and München lever style handle sets with adjustable hinges and multi-point locks are available for outswing doors. Single point locks and keyed handle sets are optional.



TORONTO HANDLE SET
(shown in Bright Brass PVD†)
Standard



MÜNCHEN HANDLE SET
(shown in Bright Brass PVD†)



ADJUSTABLE HINGES
(shown in Gold Painted)
Standard

Also available: Satin Nickel PVD† | Smoky Gray PVD† | Matte Black | Rustic Umber

†PVD (Physical Vapor Deposition) finish is an application over the color which helps protect the finish from tarnishing, peeling and cracking.
Printed images of hardware finishes will vary from actual colors. Not all hardware color options are available on all products.
Selections should be made based on color samples available from your Kolbe dealer.

606 Carteret 96 of 121

OUTSWING DOORS | Elevation Chart

COMPLEMENTARY OUTSWING DOORS

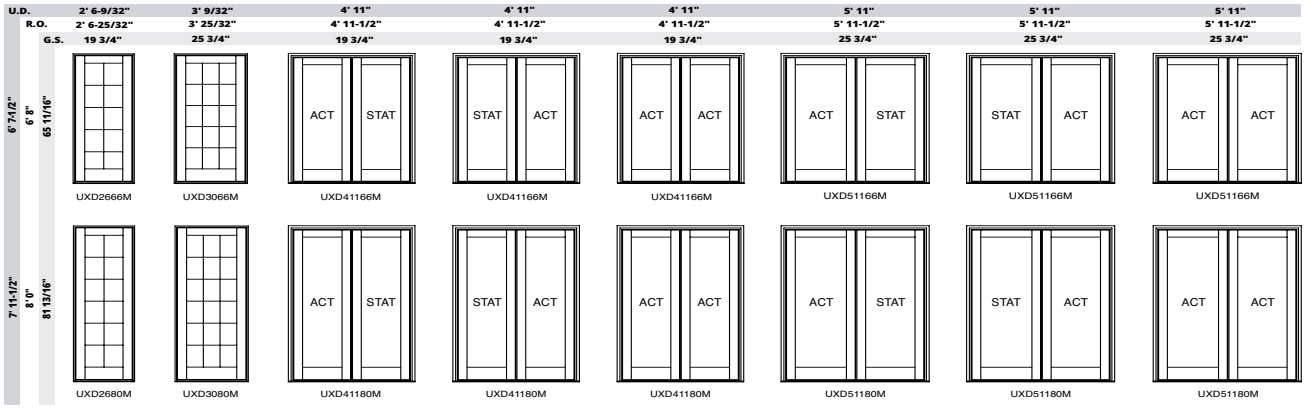

Operation is viewed from the exterior.

U.D. = Unit Dimension • R.O. = Rough Opening • G.S. = Glass Size

NOTE: All measurements are nominal. Elevation charts are not to scale.

Some installation procedures will require a larger rough opening than noted (i.e. installations utilizing our installation clips), therefore, you may need to increase the rough opening size accordingly. Rough opening gaps may be increased up to a maximum of 1/2" on all sides and still be within good practice guidelines. For rough opening recommendations, see pg. 68.

606 Carteret 97 of 121

Cross Section Drawings

COMPLEMENTARY OUTSWING DOORS

Vertical Section

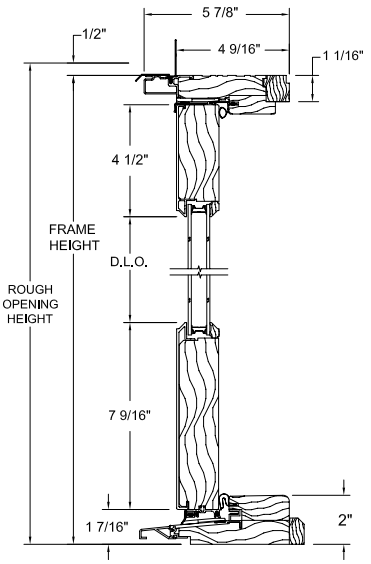

Horizontal Section

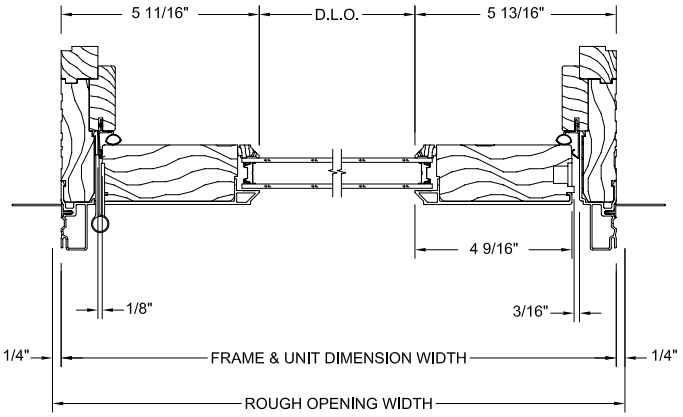

COMPLEMENTARY OUTSWING FRENCH DOORS

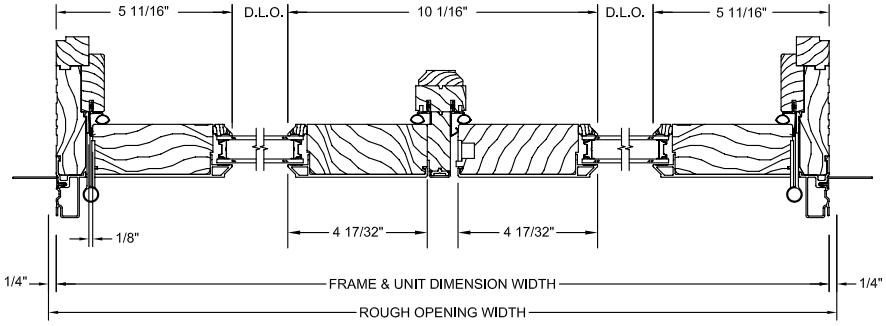

NOTE: Drawings are not to scale. For Forgent Series accessory drawings, see pg. 63. Additional and the most current drawings are available at **kolbewindows.com**

606 Carteret 98 of 121



606 Carteret 99 of 121

© Patrick Brickman


© Spacecrafting Photography,
Denali Custom Homes, Redstone Interiors

OPTIONS & ACCESSORIES

Our windows and doors are built to order, so you can choose the options that best suit the design and vision of your project. We offer glass, divided lite, hardware and trim options, as well as popular interior and exterior finishes. Forgent Series windows and doors not only provide superior performance and flexibility, they also meet and exceed the highest standards for energy efficiency.



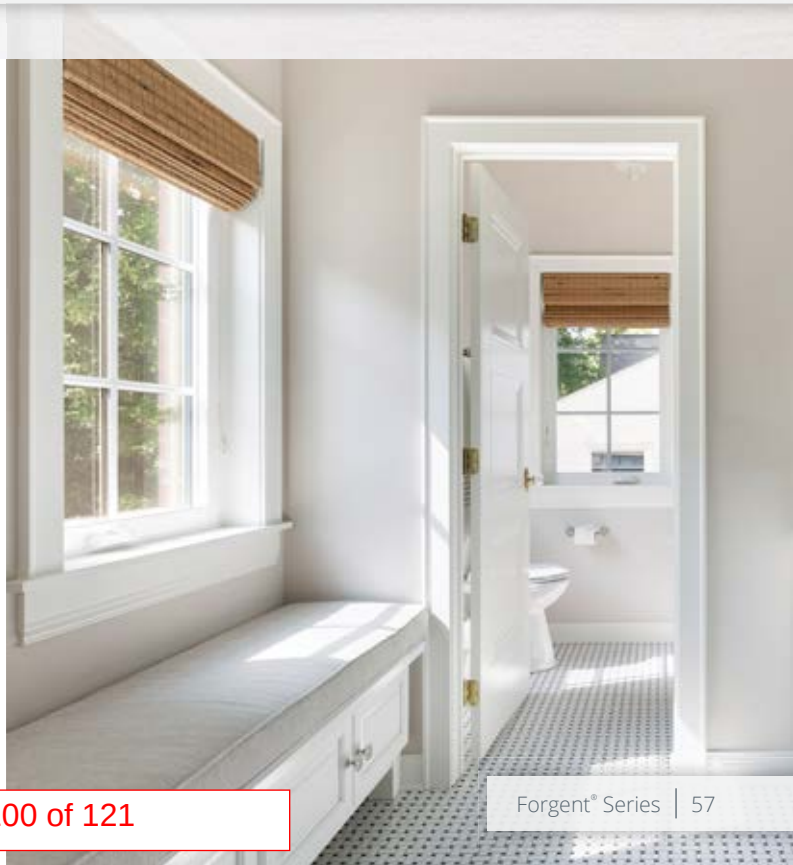

606 Carteret 100 of 121

FINISH OPTIONS

EXTERIOR FINISHES - ALL GLASTRA & GLASTRA/WOOD UNITS

Forgent Series windows and doors have a durable and resilient Glastra exterior. Cloud and Sahara are integral to the Glastra material, while Midnight and Bronze are applied as an acrylic film.*



Forgent Series exterior films (Midnight and Bronze) are compliant with and have achieved 307-16 certification from the American Architectural Manufacturers Association (AAMA). The AAMA 307-16 designation specifically refers to Voluntary Specifications for Laminates Intended for Use on AAMA Certified Profiles.

*See more film details on pg. 7



606 Carteret 101 of 121

© Spacecrafting Photography,
Denali Custom Homes, Redstone Interiors


© Spacecrafting Photography,
Denali Custom Homes, Redstone Interiors




© Photo courtesy Adamo Homes

INTERIOR FINISHES - ALL GLASTRA UNITS

Coordinating finishes are available for Glastra interiors; however, the Midnight or Bronze interior finish is only available on units with a Midnight or Bronze exterior, respectively. Ask your Kolbe dealer for details.

Forgent Series exterior films (Midnight and Bronze) are compliant with and have achieved 307-16 certification from the American Architectural Manufacturers Association (AAMA). The AAMA 307-16 designation specifically refers to Voluntary Specifications for Laminates Intended for Use on AAMA Certified Profiles.

*See more film details on pg. 7



INTERIOR FINISHES – GLASTRA/WOOD UNITS

Forgent Series Glastra/Wood windows and doors are offered with a Pine interior. For units that are ready to install upon delivery, Forgent Series windows and doors can be prefinished on the interior with one of the water-based stains or paints shown. Stained units are given two coats of satin finish clear sealer. Because our interior finishes are water-based, low-VOC stains and paints, you can rest assured you've made an environmentally conscious decision.



Printed images of wood species and stain options will vary from actual product colors. Selections should be made based on color samples available from your Kolbe dealer. Stain colors are shown on Pine. Since no two trees are identical, wood can be expected to differ both in color and graining. These factors will influence the stain's final color.

Color-matched interior paint is available through any Sherwin-Williams retail store in the United States and Canada.

*All units supplied with unfinished pine interiors must be finished in the field.
**Latex primer is not a final finish.
†White and Black are single coat interior paint finishes with some visible wood grain.
Back priming of casement operator and jamb covers is available.

606 Carteret 102 of 121

GLASS OPTIONS

Kolbe offers glazing options to provide optimum energy efficiency for the geographic region in which you live. Low-E is a "smart" coating that reduces energy transfer through the insulating glass unit. The result is reduced heating and cooling costs throughout the year. Low-E coatings also reduce the potential for condensation, as well as provide protection against fading of furniture, fabrics and carpeting.

Kolbe also offers the following Low-E glass options, as well as many specialized options:

Solar Gain Low-E
When the weather turns frigid, Solar Gain Low-E glass is the perfect cold remedy. It keeps homes warmer and more comfortable by blocking heat loss to the outside and letting the sun's heat stream in to increase solar heat gain.

Solar Low-E (Kolbe's Standard)
Suitable for most climates and meets most energy zone requirements. Solar Low-E glass is designed to reflect room-side heat back into the room during winter months. In summer, visible sunlight is allowed in while blocking most of the sun's infrared heat energy.

Solar Control Low-E
Offers an ideal balance of solar control and high visibility by blocking 95% of UV rays while maintaining the interior temperature.

Solar Advanced Control Low-E
A tinted glass recommended for warm climates that achieves greater solar control over a wide range of the spectrum, while also helping to reduce glare.

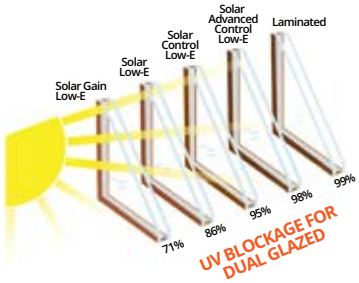

NOTE: Tested units include argon. The laminate has 1/4" inner pane. Based on Lawrence Berkeley Lab (LBL) Window 5.2 © 2003 analysis for classical UV transmission data.

Turtle Glass
Achieves the Turtle Code of less than 45% Visible Transmittance utilizing laminated glass with Solar Control Low-E and gray tint.

ThermaPlus™ Low-E
An additional Low-E coating which helps to meet the strictest energy requirements by providing protection against heat loss and UV damage. Available with dual pane versions of Solar Gain Low-E, Solar Low-E, Solar Control Low-E, Solar Advanced Control Low-E, and Solar Increased Control Low-E glass.

Triple Pane
Provides a greater energy performing window that keeps indoor air warm and comfortable, prevents heat loss, and lowers your heating bills. It is constructed with three panes of glass, thermal spacer bars and is available in Solar Gain Low-E, Solar Low-E, Solar Control Low-E, Solar Advanced Control Low-E, and Solar Increased Control Low-E glass.

Preserve® Film
A protective film that protects the glass surfaces from scratches during transit and construction, as well as reducing the time involved in job site clean-up.



Tinted, Colored or Patterned
Provides shading, privacy or visual interest.

Tempered
Standard in Kolbe doors to address safety concerns. Also available in window units to meet specific building codes.

Laminated
Benefits include safety, security, sound control and provides the ultimate in UV blockage.

Impact
Glazing utilized to withstand harsh environmental conditions, especially in coastal regions. Combined with an impact rated product, this glazing offers the highest level of security.

Neat+™
Harnesses the sun's UV rays to loosen dirt so water can rinse it away, leaving windows cleaner, longer. A special sputter-coating process makes the glass ultra smooth, so the water "sheets off" more readily than it would on uncoated glass, allowing you to spend less time cleaning.

NOTES: Not all glass is available on all products. Please contact your Kolbe dealer for product specifics. Neat+ and Preserve are trademarks of Cardinal Glass Industries, Inc. Low-E insulating glass with a stainless steel spacer bar carries a 20-year warranty. Not all glass options listed have the same glass warranty. Please contact your dealer for details.

DIVIDED LITE OPTIONS

Forgent Series windows and doors are available with two types of divided lites: performance divided lites and grilles-in-the-airspace.



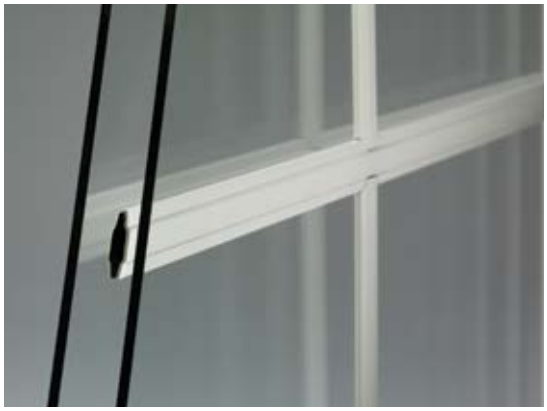

PERFORMANCE DIVIDED LITES

Kolbe's performance divided lite (PDL) glazing system gives the appearance of true divided lites without sacrificing energy efficiency. Extruded aluminum bars are adhered to the exterior of Forgent Series windows and doors. Unfinished pine bars are adhered to the interior of the single lite of insulating glass on Glastra/Wood units, while aluminum bars are adhered to the interior of All Glastra units. Aesthetically pleasing spacer bars are installed within the insulating glass unit. Together, these bars create the illusion of true divided lites. Beveled profile PDL bars are available in 7/8", 1-1/8" or 2-1/4" bar widths, and can be finished to match the exterior and/or interior, as requested. Some designs may have a composite material for the exterior PDL bar. Limited lite patterns are available.

GRILLES-IN-THE-AIRSPACE

Grilles-in-the-airspace are constructed with 3/4" wide, contoured profile aluminum bars sealed between two panes of insulating glass, offering the look of divided panes while reducing cleaning time. Bars are available in solid, woodgrain, and bi-color, for a pleasing match to the exterior and interior finishes.

NOTES: Limitations may apply. Please consult your local Kolbe dealer for more information.



© Photo courtesy Adamo Homes

606 Carteret 104 of 121

OPTIONS

WINDOW HARDWARE FINISHES



DOOR HARDWARE FINISHES



WINDOW SCREEN FINISHES



†PVD (Physical Vapor Deposition) finish is an application over the color which helps protect the hardware against tarnishing, peeling and cracking.

Printed images of hardware finishes will vary slightly from actual colors. Not all hardware color options are available on all products. Selections should be made based on color samples available from your Kolbe dealer.

WINDOW OPENING CONTROL DEVICES (WOCDs)

Kolbe offers Window Opening Control Devices (WOCDs) that restrict the size of the open window area to less than 4 inches, and feature a limit release mechanism to allow for emergency escape. These devices allow the window to latch into place at a predetermined position and automatically re-latch when closed. The WOCDs meet the ASTM F2090-13 requirements.

WOCD for Double Hungs & Sliding Windows

WOCDs can be factory applied to Forgent Series double hungs and sliding windows, or shipped loose as a kit for field installation.



WOCD APPLIED TO DOUBLE HUNG
(Glastra/Wood unit)

WOCD for Casements

This sleek, non-visible device for crank-out casements can be factory applied or shipped loose as a kit for field installation.



WOCD APPLIED TO CASEMENT
(All Glastra unit)

This device meets the stringent safety requirement of ASTM F2090-13 if applied per recommendations. Factory-applied WOCDs are available as kits for application on the job site. Not all windows are available with window opening control devices. Please ask your local Kolbe dealer about availability.

606 Carteret 105 of 121

OPTIONAL EXTERIOR ACCESSORIES

3-1/2" Flat Casing

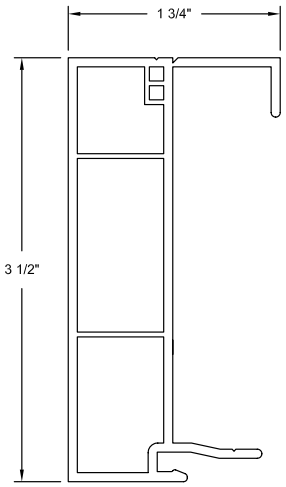

2" Brickmould

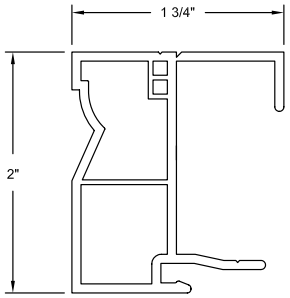

J-Channel

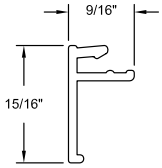

Frame Expander

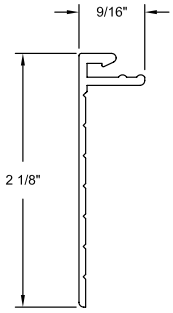

Sill Nosing

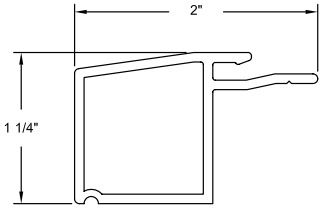

OPTIONAL EXTERIOR ACCESSORIES FOR DOORS THAT COMPLEMENT GLASTRA/WOOD UNITS

3-1/2" Flat Casing

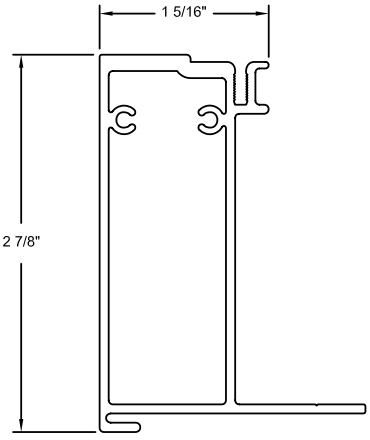

2" Brickmould

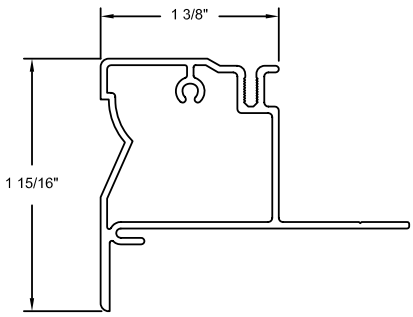

NOTE: Drawings are not to scale. Additional and the most current drawings are available at **kolbewindows.com**

606 Carteret 106 of 121

PERFORMANCE

SOUND TRANSMISSION CLASS/OUTDOOR-INDOOR TRANSMISSION CLASS (STC/OITC)

STC/OITC ratings are measurements used to gauge how well window and door products provide noise reduction. Windows and doors can be used as a sound barrier for outside or inside noise. The higher the rating, the better the sound control. Factors such as glass type, glass thickness, and airspace between the glass should be considered, as all affect STC/OITC ratings. A wide selection of Forgent Series products can be upgraded to meet specific needs.

Product	Glass		STC	OITC
Forgent Series STC/OITC Ratings				
Double Hung	Insulated Glass 3.1mm-3.1mm	Standard Double Pane	29	24
Double Hung	Insulated Glass 5.7mm-3.1mm	Offset Double Pane	36	29
Double Hung	LAMI 80	Impact Laminated	36	30
Double Hung	LAMI 82	1/4" Laminated	36	29
Double Hung	Triple Insulated Glass 3.1mm-3.1mm-4.7.mm	Offset Triple Pane	35	29
Direct Set Double Hung	Insulated Glass 3.9mm-3.9mm	Standard Double Pane	29	24
Direct Set Double Hung	Insulated Glass 5.7mm-3.1mm	Offset Double Pane	30	25
Direct Set Double Hung	LAMI 81	Impact Laminated	34	30
Direct Set Double Hung	LAMI 82	1/4" Laminated	35	29
Direct Set Double Hung	Triple Insulated Glass 3.1mm-3.1mm-4.7.mm	Offset Triple Pane	30	26
Studio Double Hung	Insulated Glass 3.1mm-3.1mm	Standard Double Pane	29	24
Studio Double Hung	Insulated Glass 5.7mm-3.1mm	Offset Double Pane	33	28
Studio Double Hung	LAMI 85	Impact Laminated	35	31
Studio Double Hung	LAMI 82	1/4" Laminated	34	27
Studio Double Hung	Triple Insulated Glass 3.1mm-3.1mm-4.7.mm	Offset Triple Pane	33	28
Sliding Door	Insulated Glass 3.9mm-3.9mm	Standard Double Pane	29	23
Sliding Door	LAMI 84	Impact Laminated	32	28
Sliding Door	LAMI 82	1/4" Laminated	31	27
Sliding Door	Triple Insulated Glass 3.1mm-3.1mm-3.1mm	Offset Triple Pane	28	22
Sliding Window	Insulated Glass 3.1mm-3.1mm	Standard Double Pane	29	24
Sliding Window	Insulated Glass 5.7mm-3.1mm	Offset Double Pane	36	30
Sliding Window	LAMI 80	Impact Laminated	35	30
Sliding Window	LAMI 82	1/4" Laminated	34	29
Sliding Window	Triple Insulated Glass 3.1mm-3.1mm-4.7.mm	Offset Triple Pane	35	30

Product	Glass		STC	OITC
Forgent Series STC/OITC Ratings (Continued)				
Crank-Out Awning	Insulated Glass 3.1mm-3.1mm	Standard Double Pane	28	22
Crank-Out Awning	Insulated Glass 5.7mm-3.1mm	Offset Double Pane	33	26
Crank-Out Awning	LAMI 80	Impact Laminated	34	28
Crank-Out Awning	LAMI 82	1/4" Laminated	33	26
Crank-Out Awning	Triple Insulated Glass 3.1mm-3.1mm-4.7.mm	Offset Triple Pane	33	28
Crank-Out Casement	Insulated Glass 3.1mm-3.1mm	Standard Double Pane	27	22
Crank-Out Casement	Insulated Glass 5.7mm-3.1mm	Offset Double Pane	31	26
Crank-Out Casement	LAMI 80	Impact Laminated	32	27
Crank-Out Casement	LAMI 82	1/4" Laminated	32	27
Crank-Out Casement	Triple Insulated Glass 3.1mm-3.1mm-4.7.mm	Offset Triple Pane	33	27
Picture Direct Set Crank-Out Casement	Insulated Glass 3.9mm-3.9mm	Standard Double Pane	29	24
Picture Direct Set Crank-Out Casement	Insulated Glass 5.7mm-3.1mm	Offset Double Pane	31	25
Picture Direct Set Crank-Out Casement	LAMI 85	Impact Laminated	33	29
Picture Direct Set Crank-Out Casement	LAMI 83	1/4" Laminated	35	30
Picture Direct Set Crank-Out Casement	Triple Insulated Glass 3.1mm-3.1mm-4.7.mm	Offset Triple Pane	30	26
Picture Sash Set Crank-Out Casement	Insulated Glass 3.9mm-3.9mm	Standard Double Pane	30	24
Picture Sash Set Crank-Out Casement	Insulated Glass 5.7mm-3.1mm	Offset Double Pane	32	27
Picture Sash Set Crank-Out Casement	LAMI 85	Impact Laminated	34	28
Picture Sash Set Crank-Out Casement	LAMI 82	1/4" Laminated	34	29
Picture Sash Set Crank-Out Casement	Triple Insulated Glass 3.1mm-3.1mm-4.7.mm	Offset Triple Pane	32	28

606 Carteret 107 of 121

IMPACT PERFORMANCE OPTIONS

Many of the Forgent Series products are available with impact performance packages to meet even the strictest building code requirements. Kolbe offers impact performance products to improve air, water and structural ratings. These impact ratings provide enhanced window and door strength without any modifications to the product. All Forgent Series impact rated products are glazed with structural silicone. **All certifications apply to both All Glastra and Glastra/ Wood products.**



Product	Kolbe Performance	Product Configuration	Air Tested to PSF	Water Tested to PA (PSF)	Performance Class and Grade	Design Pressure PA (PSF)		Max Width		Max Height		FL #	TDI #
						Positive	Negative	Inches	(MM)	Inches	(MM)		
Forgent Series Impact Ratings													
Forgent Complementary Sliding Door	Impact 4	Two Panel	1.57	360 Pa (7.52 psf)	LC-PG50 SD	+2400 Pa (50.13 psf)	-2400 Pa (50.13 psf)	96	2438	96	2438	22641	In Process
Forgent Complementary Sliding Door	Impact 4	Four Panel	1.57	290 Pa (6.06 psf)	LC-PG40 SD	+1920 Pa (40.10 psf)	-1920 Pa (40.10 psf)	168	4267	96	2438	22641	In Process
Crank-Out Awning	Impact 4	Single	1.57	440 Pa (9.19 psf)	LC-PG60 AP	+2880 Pa (60.15 psf)	-2880 Pa (60.15 psf)	47.5	1206	47.5	1206	22241	In Process
Crank-Out Casement	Impact 4	Single	1.57	470 Pa (9.82 psf)	LC-PG65 C	+3120 Pa (65.16 psf)	-3120 Pa (65.16 psf)	35.5	902	71.5	1816	22235	In Process
Casement Direct Set	Impact 4	Single	1.57	470 Pa (9.82 psf)	LC-PG55 C	+3120 Pa (65.16 psf)	-3120 Pa (65.16 psf)	35.5	902	71.5	1816	22235	In Process
Casement Direct Set	Impact 4	Single	1.57	470 Pa (9.82 psf)	CW-PG55 FW	+3120 Pa (65.16 psf)	-3120 Pa (65.16 psf)	59.5	1511	95.5	2426	22235	In Process
Casement Direct Set	Impact 4	Single	1.57	470 Pa (9.82 psf)	LC-PG65 FW	+3120 Pa (65.16 psf)	-3120 Pa (65.16 psf)	28.5	724	71.5	1816	22242	In Process
Casement Direct Set	Impact 4	Single	1.57	470 Pa (9.82 psf)	LC-PG65 FW	+3120 Pa (65.16 psf)	-3120 Pa (65.16 psf)	55.5	1410	85.5	2172	22242	In Process
Casement Picture	Impact 4	Single	1.57	470 Pa (9.82 psf)	LC-PG65 FW	+3120 Pa (65.16 psf)	-3120 Pa (65.16 psf)	71.5	1816	71.5	1816	22242	In Process
Double Hung Direct Set	Impact 4	Single	1.57	470 Pa (9.82 psf)	LC-PG65 FW	+3120 Pa (65.16 psf)	-3120 Pa (65.16 psf)	59.5	1511	85.5	2172	22242	In Process
Double Hung Direct Set	Impact 4	Single	1.57	470 Pa (9.82 psf)	LC-PG65 FW	+3120 Pa (65.16 psf)	-3120 Pa (65.16 psf)	28.5	724	71.5	1816	22242	In Process
Double Hung Direct Set	Impact 4	Single	1.57	470 Pa (9.82 psf)	CW-PG55 FW	+3120 Pa (65.16 psf)	-3120 Pa (65.16 psf)	59.5	1511	95.5	2426	22242	In Process
Double Hung	Impact 4	Single	1.57	470 Pa (9.82 psf)	LC-PG55 H	+2640 Pa (55.14 psf)	-2640 Pa (55.14 psf)	44	1118	75	1905	22655	In Process
Double Hung Studio	Impact 4	Single	1.57	470 Pa (9.82 psf)	LC-PG65 FW	+3120 Pa (65.16 psf)	-3120 Pa (65.16 psf)	60	1524	80	2032	22242	In Process
Sliding Window	Impact 4	Single	1.57	360 Pa (7.52 psf)	LC-PG50 HS	+2400 Pa (50.13 psf)	-2400 Pa (50.13 psf)	71.5	1816	59.5	1511	22656	Submitted
1-1/2" Mull Intersecting	HVHZ	–	1.57	70 Pa (10.65 psf)	LC-PG70	*	*	–	–	–	–	21044	–
Half-inch Reinforced Mullion (No T-Mulls)	HVHZ	–	1.57	70 Pa (10.65 psf)	LC-PG60	*	*	–	–	–	–	21044	–

* Allowable mulled assembly pressure shall be the lesser of the pressure based on mullion span & load width, and that specified for the individual window units.

NOTE: For specific product information, including configuration and maximum size tested, please visit **kolbewindows.com/solutions/impact-resistance**.

606 Carteret 108 of 121

ENERGY PERFORMANCE DATA

ENERGY STAR® – UNITED STATES

LEARN MORE AT energystar.gov

Energy Star is a government-regulated program that was created by the Environmental Protection Agency (EPA), and the U.S. Department of Energy (DOE), to help consumers quickly and easily identify energy saving products. The Energy Star program uses energy values obtained by window and door manufacturers through the National Fenestration Rating Council (NFRC) program. NFRC ratings are based on the energy performance of the total window or door – both glass and frame.

The Energy Star program for the United States divides the nation into four separate climate zones – Northern, North-Central, South-Central, and Southern.

The performance criteria that needs to be met in order to be Energy Star compliant in specific climate zones are shown in the charts provided. Note that this information is per criteria that took effect in 2015 and 2016.

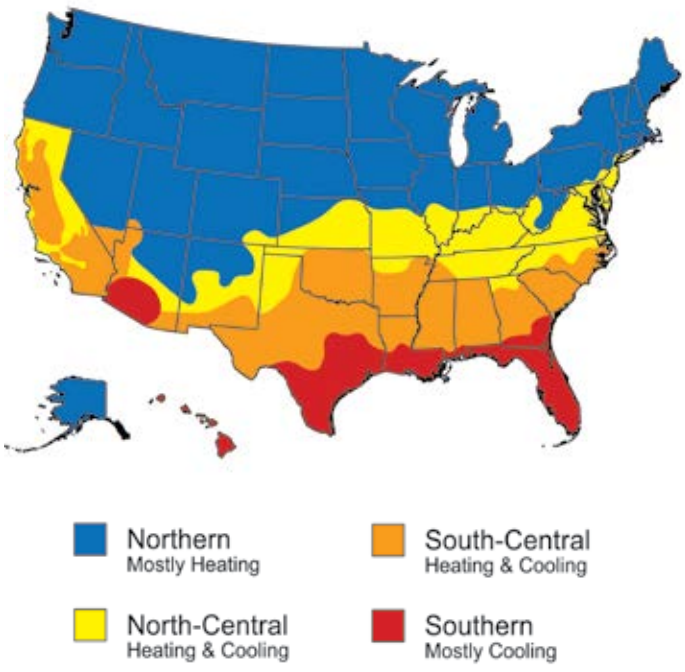

2015 & 2016 ENERGY STAR – Qualification Criteria for Windows*

Climate Zones – U.S.	U-Factor	SHGC
Northern**	≤ 0.27	Any
Northern**	= 0.28	≥ 0.32
Northern**	= 0.29	≥ 0.37
Northern**	= 0.30	≥ 0.42
North-Central	≤ 0.30	≤ 0.40
South-Central	≤ 0.30	≤ 0.25
Southern	≤ 0.40	≤ 0.25

*The effective date for the Northern Zone prescriptive and equivalent energy performance criteria for windows was January 1, 2016. North-Central, South-Central, and Southern criteria will continue to follow 2015 guidelines.

**Northern zone windows can meet prescriptive (1st row) or alternative energy performance (2nd, 3rd, and 4th rows) criteria to qualify for ENERGY STAR.

2015 ENERGY STAR – Qualification Criteria for Doors

Glazing	U-Factor	SHGC	
Opaque	≤ 0.17	No rating	
≤ 1/2-Lite	≤ 0.25	≤ 0.25	
> 1/2-Lite	≤ 0.30	Northern North-Central	≤ 0.40
		Southern South-Central	≤ 0.25

CALIFORNIA'S TITLE 24

Kolbe's Forgent Series windows and doors can meet the strict California Title 24 Building Energy Efficiency Standards. Talk to your dealer about Forgent Series products with glass options that help meet these stringent energy efficiency requirements.

For energy performance data, visit:

- www.kolbewindows.com/energy

Kolbe demonstrates a commitment to providing accurate energy data by having products independently simulated, tested, inspected and listed in the NFRC certification program, and making that data available at **kolbewindows.com** and on window labels.

Energy performance data and air, water, structural data is updated on a continuous basis. For the most current information, contact your local Kolbe dealer.

606 Carteret 109 of 121

ENERGY STAR® – CANADA

Fenestration products may comply for Canada's Energy Star program based on these compliance paths: their total U-factor, their Energy Rating (ER), or both. The Energy Rating is based on a product's overall performance based on three criteria: (1) solar heat gain, (2) U-factor, and (3) average air tightness. The higher the ER number, the better the product's thermal performance.

The U-factor and ER criteria for Canada is shown in the chart provided. For Kolbe products that qualify for Canada's Energy Star Program, search their website at **www.oee.nrcan.gc.ca/energystar.**

2020 ENERGY STAR – Qualification Criteria for Windows & Doors in Canada†

Minimum Energy Rating (ER)	or	Maximum U-Factor
34	or	≤ 0.21

U-Factor Equivalency – Qualification Criteria for Windows & Doors in Canada†

Imperial	Metric
0.35	2.00
0.32	1.80
0.28	1.60
0.25	1.40
0.21	1.20

†Criteria shown applies to windows, sliding doors, and swinging doors.



ENERGY PERFORMANCE TERMINOLOGY

- U-Factor refers to a measure of heat transfer through the window or door unit. A lower U-factor means less heat escapes during winter weather, thus reducing heating costs in cold climates.
- R-Value refers to resistance to heat flow. A high R-value indicates that a window or door has good heat insulating properties.
- Solar Heat Gain Coefficient (SHGC) is a measure of how much solar energy is passing through the unit's glass. The lower a window or door unit's SHGC, the less solar heat is transmitted into a room, thus allowing for lower cooling bills in hot climates.
- Visible Transmittance (VT) is a measure of the portion of visible light that passes through a window or door. The higher a window or door unit's VT Total, the more visible light is transmitted into a room. This value is influenced by both the glass selection and by the ratio of glazing and frame area.

Kolbe demonstrates a commitment to providing accurate energy data by having products independently simulated, tested, inspected and listed in the NFRC certification program, and making that data available at **kolbewindows.com** and on window labels.

Energy performance data and air, water, structural data is updated on a continuous basis. For the most current information, contact your local Kolbe dealer.

606 Carteret 110 of 121

CLEAR OPENING DIMENSIONS

ROUGH OPENING RECOMMENDATIONS:

The Kolbe standard rough opening dimensions published in our product literature are provided as a guideline to maintain a minimum 1/4" space between the window or patio door and the building structure. There are certain situations where Kolbe recommends a gap larger than our published 1/4" standard:

- When installation clips are used, the gap should be increased to 1/2" on the sides, top and bottom of the unit.
- When mulls are installed in the opening, the gap all around should be increased to 1/2". For installation consistency, the same gap should be used on all units in the project.
- When a sill pan drainage system is used, the gap should be increased to 1/2" on the top and bottom of the unit.

Because every installation is different, Kolbe strongly recommends consultation with the local supplier or a qualified contractor, architect or structural engineer prior to the installation of any Kolbe product. Installation of Kolbe products, including sizing of rough opening, method of attachment, fastener selection, and code compliance is the sole responsibility of the architect, building owner, contractor and/or consumer.

Unless otherwise specified, if units are ordered by rough opening, Kolbe will size the units using our standard minimum 1/4" gap – regardless of the options or construction of the product ordered.

DEFINITIONS OF ACCEPTABLE EMERGENCY ESCAPE & RESCUE OPENINGS:

"Egress" has long been the term used to describe the clear opening dimensions of a window or door necessary to enter or exit a building in case of an emergency. With the release of the International Building Code (IBC) and International Residential Code (IRC), "egress" is no longer the appropriate term.

IBC and IRC have set the following as basic requirements for Emergency Escape & Rescue Openings.

- Minimum Opening Width: 20 inches (508 mm)
- Minimum Opening Height: 24 inches (610 mm)
- Minimum Opening Area: 5.7 sq. ft. (0.53 m^2)

NOTE: Please check your local codes to confirm that these Emergency Escape & Rescue Opening requirements are applicable. Other requirements may also apply.

Product #	Sq. Ft. Clear Opg.	Clear Opening		Sq. Ft. D.L.O.	Sq. Ft. Vent	Sq. Ft. of Unit Frame Dim.
		Width	Height			
Casements with Standard Adjustable Hinges (All Glastra)						
MC1620	0.88	6-29/32"	18-9/32"	1.46	1.56	2.86
MC1626	1.16	6-29/32"	24-9/32"	1.96	2.07	3.59
MC1630	1.45	6-29/32"	30-9/32"	2.45	2.58	4.31
MC1636	1.74	6-29/32"	36-9/32"	2.94	3.09	5.04
MC1640	2.03	6-29/32"	42-9/32"	3.44	3.61	5.77
MC1646	2.32	6-29/32"	48-9/32"	3.93	4.12	6.50
MC1650	2.60	6-29/32"	54-9/32"	4.42	4.63	7.23
MC1656	2.89	6-29/32"	60-9/32"	4.91	5.14	7.96
MC1660	3.18	6-29/32"	66-9/32"	5.41	5.65	8.69
MC2020	1.64	12-29/32"	18-9/32"	2.21	2.32	3.84
MC2026	2.18	12-29/32"	24-9/32"	2.95	3.08	4.81
MC2030	2.71	12-29/32"	30-9/32"	3.69	3.84	5.79
MC2036	3.25	12-29/32"	36-9/32"	4.44	4.61	6.77
MC2040	3.79	12-29/32"	42-9/32"	5.18	5.37	7.75
MC2046	4.33	12-29/32"	48-9/32"	5.92	6.13	8.73
MC2050	4.87	12-29/32"	54-9/32"	6.66	6.89	9.71
MC2056	5.40	12-29/32"	60-9/32"	7.41	7.65	10.69
MC2060	5.94	12-29/32"	66-9/32"	8.15	8.41	11.67
MC2620	2.40	18-29/32"	18-9/32"	2.95	3.08	4.81
MC2626	3.19	18-29/32"	24-9/32"	3.94	4.09	6.04
MC2630	3.98	18-29/32"	30-9/32"	4.94	5.11	7.27
MC2636	4.76	18-29/32"	36-9/32"	5.93	6.12	8.50
MC2640	5.55	18-29/32"	42-9/32"	6.92	7.13	9.73
MC2646	6.34	18-29/32"	48-9/32"	7.91	8.14	10.96
MC2650	7.13	18-29/32"	54-9/32"	8.91	9.15	12.19
MC2656	7.91	18-29/32"	60-9/32"	9.90	10.16	13.42
MC2660	8.70	18-29/32"	66-9/32"	10.89	11.18	14.65
MC3020	3.16	24-29/32"	18-9/32"	3.69	3.84	5.79
MC3026	4.20	24-29/32"	24-9/32"	4.94	5.11	7.27
MC3030	5.24	24-29/32"	30-9/32"	6.18	6.37	8.75
MC3036	6.28	24-29/32"	36-9/32"	7.42	7.63	10.23
MC3040	7.31	24-29/32"	42-9/32"	8.66	8.89	11.71
MC3046	8.35	24-29/32"	48-9/32"	9.91	10.15	13.19
MC3050	9.39	24-29/32"	54-9/32"	11.15	11.41	14.67
MC3056	10.43	24-29/32"	60-9/32"	12.39	12.68	16.15
MC3060	11.46	24-29/32"	66-9/32"	13.64	13.94	17.63

NOTE: For the most up-to-date data, please visit **kolbewindows.com**
Shaded units meet most national building codes for emergency escape and rescue requirements.

606 Carteret 111 of 121

Product #	Sq. Ft. Clear Opg.	Clear Opening		Sq. Ft. D.L.O.	Sq. Ft. Vent	Sq. Ft. of Unit Frame Dim.
		Width	Height			
Casements with Standard Adjustable Hinges (Glastra/Wood)						
MC1620	0.92	7-3/16"	18-17/32"	1.46	1.65	2.86
MC1626	1.22	7-3/16"	24-17/32"	1.96	2.19	3.59
MC1630	1.52	7-3/16"	30-17/32"	2.45	2.72	4.31
MC1636	1.82	7-3/16"	36-17/32"	2.94	3.26	5.04
MC1640	2.12	7-3/16"	42-17/32"	3.44	3.79	5.77
MC1646	2.42	7-3/16"	48-17/32"	3.93	4.33	6.50
MC1650	2.72	7-3/16"	54-17/32"	4.42	4.86	7.23
MC1656	3.02	7-3/16"	60-17/32"	4.91	5.40	7.96
MC1660	3.32	7-3/16"	66-17/32"	5.41	5.93	8.69
MC2020	1.70	13-3/16"	18-17/32"	2.21	2.42	3.84
MC2026	2.25	13-3/16"	24-17/32"	2.95	3.21	4.81
MC2030	2.80	13-3/16"	30-17/32"	3.69	4.00	5.79
MC2036	3.35	13-3/16"	36-17/32"	4.44	4.78	6.77
MC2040	3.90	13-3/16"	42-17/32"	5.18	5.57	7.75
MC2046	4.44	13-3/16"	48-17/32"	5.92	6.35	8.73
MC2050	4.99	13-3/16"	54-17/32"	6.66	7.14	9.71
MC2056	5.54	13-3/16"	60-17/32"	7.41	7.92	10.69
MC2060	6.09	13-3/16"	66-17/32"	8.15	8.71	11.67
MC2620	2.47	19-3/16"	18-17/32"	2.95	3.20	4.81
MC2626	3.27	19-3/16"	24-17/32"	3.94	4.23	6.04
MC2630	4.07	19-3/16"	30-17/32"	4.94	5.27	7.27
MC2636	4.87	19-3/16"	36-17/32"	5.93	6.30	8.50
MC2640	5.67	19-3/16"	42-17/32"	6.92	7.34	9.73
MC2646	6.47	19-3/16"	48-17/32"	7.91	8.37	10.96
MC2650	7.27	19-3/16"	54-17/32"	8.91	9.41	12.19
MC2656	8.07	19-3/16"	60-17/32"	9.90	10.44	13.42
MC2660	8.87	19-3/16"	66-17/32"	10.89	11.48	14.65
MC3020	3.24	25-3/16"	18-17/32"	3.69	3.97	5.79
MC3026	4.29	25-3/16"	24-17/32"	4.94	5.25	7.27
MC3030	5.34	25-3/16"	30-17/32"	6.18	6.54	8.75
MC3036	6.39	25-3/16"	36-17/32"	7.42	7.82	10.23
MC3040	7.44	25-3/16"	42-17/32"	8.66	9.11	11.71
MC3046	8.49	25-3/16"	48-17/32"	9.91	10.40	13.19
MC3050	9.54	25-3/16"	54-17/32"	11.15	11.68	14.67
MC3056	10.59	25-3/16"	60-17/32"	12.39	12.97	16.15
MC3060	11.64	25-3/16"	66-17/32"	13.64	14.25	17.63

Product #	Sq. Ft. Clear Opg.	Clear Opening		Sq. Ft. D.L.O.	Sq. Ft. Vent	Sq. Ft. of Unit Frame Dim.
		Width	Height			
Casements with Egress Hinges (All Glastra)						
MC2620	2.96	23-9/32"	18-9/32"	2.95	3.08	4.81
MC2626	3.93	23-9/32"	24-9/32"	3.94	4.09	6.04
MC2630	4.90	23-9/32"	30-9/32"	4.94	5.11	7.27
MC2636	5.87	23-9/32"	36-9/32"	5.93	6.12	8.50
MC2640	6.84	23-9/32"	42-9/32"	6.92	7.13	9.73
MC2646	7.81	23-9/32"	48-9/32"	7.91	8.14	10.96
MC2650	8.78	23-9/32"	54-9/32"	8.91	9.15	12.19
MC2656	9.75	23-9/32"	60-9/32"	9.90	10.16	13.42
MC2660	10.72	23-9/32"	66-9/32"	10.89	11.18	14.65
MC3020	3.72	29-9/32"	18-9/32"	3.69	3.84	5.79
MC3026	4.94	29-9/32"	24-9/32"	4.94	5.11	7.27
MC3030	6.16	29-9/32"	30-9/32"	6.18	6.37	8.75
MC3036	7.38	29-9/32"	36-9/32"	7.42	7.63	10.23
MC3040	8.60	29-9/32"	42-9/32"	8.66	8.89	11.71
MC3046	9.82	29-9/32"	48-9/32"	9.91	10.15	13.19
MC3050	11.04	29-9/32"	54-9/32"	11.15	11.41	14.67
MC3056	12.26	29-9/32"	60-9/32"	12.39	12.68	16.15
MC3060	13.48	29-9/32"	66-9/32"	13.64	13.94	17.63

Product #	Sq. Ft. Clear Opg.	Clear Opening		Sq. Ft. D.L.O.	Sq. Ft. Vent	Sq. Ft. of Unit Frame Dim.
		Width	Height			
Casements with Egress Hinges (Glastra/Wood)						
MC2620	3.03	23-9/16"	18-17/32"	2.95	3.20	4.81
MC2626	4.01	23-9/16"	24-17/32"	3.94	4.23	6.04
MC2630	5.00	23-9/16"	30-17/32"	4.94	5.27	7.27
MC2636	5.98	23-9/16"	36-17/32"	5.93	6.30	8.50
MC2640	6.96	23-9/16"	42-17/32"	6.92	7.34	9.73
MC2646	7.94	23-9/16"	48-17/32"	7.91	8.37	10.96
MC2650	8.92	23-9/16"	54-17/32"	8.91	9.41	12.19
MC2656	9.90	23-9/16"	60-17/32"	9.90	10.44	13.42
MC2660	10.89	23-9/16"	66-17/32"	10.89	11.48	14.65
MC3020	3.80	29-9/16"	18-17/32"	3.69	3.97	5.79
MC3026	5.04	29-9/16"	24-17/32"	4.94	5.25	7.27
MC3030	6.27	29-9/16"	30-17/32"	6.18	6.54	8.75
MC3036	7.50	29-9/16"	36-17/32"	7.42	7.82	10.23
MC3040	8.73	29-9/16"	42-17/32"	8.66	9.11	11.71
MC3046	9.96	29-9/16"	48-17/32"	9.91	10.40	13.19
MC3050	11.20	29-9/16"	54-17/32"	11.15	11.68	14.67
MC3056	12.43	29-9/16"	60-17/32"	12.39	12.97	16.15
MC3060	13.66	29-9/16"	66-17/32"	13.64	14.25	17.63

NOTE: For the most up-to-date data, please visit **kolbewindows.com**
Shaded units meet most national building codes for emergency escape and rescue requirements.

606 Carteret 112 of 121

CLEAR OPENING DIMENSIONS

Notes for Awning Windows:

- Awnings may not be considered emergency escape and rescue windows.
- Clear opening dimensions are determined after unhooking and retracting operator arms and pushing sash open to 90°.

Product #	Sq. Ft. Clear Opg.	Clear Opening		Sq. Ft. D.L.O.	Sq. Ft. Vent	Sq. Ft. of Unit Frame Dim.
		Width	Height			
Awnings (All Glastra)						
MA2020	1.20	18-9/32"	9-27/64"	2.21	2.33	3.84
MA2620	1.59	24-9/32"	9-27/64"	2.95	3.09	4.81
MA3020	1.98	30-9/32"	9-27/64"	3.69	3.86	5.79
MA3620	2.37	36-9/32"	9-27/64"	4.44	4.62	6.77
MA4020	2.77	42-9/32"	9-27/64"	5.18	5.38	7.75
MA2026	1.96	18-9/32"	15-27/64"	2.95	3.10	4.81
MA2626	2.60	24-9/32"	15-27/64"	3.94	4.11	6.04
MA3026	3.24	30-9/32"	15-27/64"	4.94	5.12	7.27
MA3626	3.89	36-9/32"	15-27/64"	5.93	6.13	8.50
MA4026	4.53	42-9/32"	15-27/64"	6.92	7.14	9.73
MA2030	2.30	18-9/32"	18-7/64"	3.69	3.86	5.79
MA2630	3.05	24-9/32"	18-7/64"	4.94	5.13	7.27
MA3030	3.81	30-9/32"	18-7/64"	6.18	6.39	8.75
MA3630	4.56	36-9/32"	18-7/64"	7.42	7.65	10.23
MA4030	5.32	42-9/32"	18-7/64"	8.66	8.91	11.71
MA2036	3.06	18-9/32"	24-7/64"	4.44	4.63	6.77
MA2636	4.07	24-9/32"	24-7/64"	5.93	6.14	8.50
MA3036	5.07	30-9/32"	24-7/64"	7.42	7.65	10.23
MA3636	6.07	36-9/32"	24-7/64"	8.91	9.16	11.96
MA4036	7.08	42-9/32"	24-7/64"	10.41	10.68	13.69
MA2040	3.82	18-9/32"	30-7/64"	5.18	5.39	7.75
MA2640	5.08	24-9/32"	30-7/64"	6.92	7.16	9.73
MA3040	6.33	30-9/32"	30-7/64"	8.66	8.92	11.71
MA3640	7.59	36-9/32"	30-7/64"	10.41	10.68	13.69
MA4040	8.84	42-9/32"	30-7/64"	12.15	12.44	15.67

Product #	Sq. Ft. Clear Opg.	Clear Opening		Sq. Ft. D.L.O.	Sq. Ft. Vent	Sq. Ft. of Unit Frame Dim.
		Width	Height			
Awnings (Glastra/Wood)						
MA2020	1.23	18-27/32"	9-25/64"	2.21	2.42	3.84
MA2620	1.62	24-27/32"	9-25/64"	2.95	3.20	4.81
MA3020	2.01	30-27/32"	9-25/64"	3.69	3.97	5.79
MA3620	2.40	36-27/32"	9-25/64"	4.44	4.74	6.77
MA4020	2.79	42-27/32"	9-25/64"	5.18	5.51	7.75
MA2026	2.01	18-27/32"	15-25/64"	2.95	3.21	4.81
MA2626	2.66	24-27/32"	15-25/64"	3.94	4.23	6.04
MA3026	3.30	30-27/32"	15-25/64"	4.94	5.25	7.27
MA3626	3.94	36-27/32"	15-25/64"	5.93	6.28	8.50
MA4026	4.58	42-27/32"	15-25/64"	6.92	7.30	9.73
MA2030	2.37	18-27/32"	18-5/64"	3.69	4.00	5.79
MA2630	3.12	24-27/32"	18-5/64"	4.94	5.27	7.27
MA3030	3.87	30-27/32"	18-5/64"	6.18	6.54	8.75
MA3630	4.63	36-27/32"	18-5/64"	7.42	7.81	10.23
MA4030	5.38	42-27/32"	18-5/64"	8.66	9.08	11.71
MA2036	3.15	18-27/32"	24-5/64"	4.44	4.78	6.77
MA2636	4.15	24-27/32"	24-5/64"	5.93	6.30	8.50
MA3036	5.16	30-27/32"	24-5/64"	7.42	7.82	10.23
MA3636	6.16	36-27/32"	24-5/64"	8.91	9.35	11.96
MA4036	7.16	42-27/32"	24-5/64"	10.41	10.87	13.69
MA2040	3.94	18-27/32"	30-5/64"	5.18	5.57	7.75
MA2640	5.19	24-27/32"	30-5/64"	6.92	7.34	9.73
MA3040	6.44	30-27/32"	30-5/64"	8.66	9.11	11.71
MA3640	7.70	36-27/32"	30-5/64"	10.41	10.88	13.69
MA4040	8.95	42-27/32"	30-5/64"	12.15	12.65	15.67

NOTE: For the most up-to-date data, please visit **kolbewindows.com**
Shaded units meet most national building codes for emergency escape and rescue requirements.

606 Carteret 113 of 121

Product #	Sq. Ft. Clear Opg.	Clear Opening		Sq. Ft. D.L.O.	Sq. Ft. Vent	Sq. Ft. of Unit Frame Dim.
		Width	Height			
New Construction Double Hungs (All Glastra)						
MDH1630	1.18	13-23/32"	12-3/8"	2.04	1.18	4.31
MDH1636	1.46	13-23/32"	15-3/8"	2.51	1.46	5.04
MDH1640	1.75	13-23/32"	18-3/8"	2.97	1.75	5.77
MDH1646	2.04	13-23/32"	21-3/8"	3.44	2.04	6.50
MDH1650	2.32	13-23/32"	24-3/8"	3.90	2.32	7.23
MDH1656	2.61	13-23/32"	27-3/8"	4.36	2.61	7.96
MDH1660	2.67	13-23/32"	28"	4.83	2.67	8.69
MDH2030	1.69	19-23/32"	12-3/8"	3.14	1.69	5.79
MDH2036	2.11	19-23/32"	15-3/8"	3.86	2.11	6.77
MDH2040	2.52	19-23/32"	18-3/8"	4.57	2.52	7.75
MDH2046	2.93	19-23/32"	21-3/8"	5.29	2.93	8.73
MDH2050	3.34	19-23/32"	24-3/8"	6.00	3.34	9.71
MDH2056	3.75	19-23/32"	27-3/8"	6.71	3.75	10.69
MDH2060	3.83	19-23/32"	28"	7.43	3.83	11.67
MDH2630	2.21	25-23/32"	12-3/8"	4.24	2.21	7.27
MDH2636	2.75	25-23/32"	15-3/8"	5.21	2.75	8.50
MDH2640	3.28	25-23/32"	18-3/8"	6.17	3.28	9.73
MDH2646	3.82	25-23/32"	21-3/8"	7.14	3.82	10.96
MDH2650	4.35	25-23/32"	24-3/8"	8.10	4.35	12.19
MDH2656	4.89	25-23/32"	27-3/8"	9.06	4.89	13.42
MDH2660	5.00	25-23/32"	28"	10.03	5.00	14.65
MDH2830	2.38	27-23/32"	12-3/8"	4.61	2.38	7.77
MDH2836	2.96	27-23/32"	15-3/8"	5.66	2.96	9.08
MDH2840	3.54	27-23/32"	18-3/8"	6.71	3.54	10.39
MDH2846	4.11	27-23/32"	21-3/8"	7.75	4.11	11.70
MDH2850	4.69	27-23/32"	24-3/8"	8.80	4.69	13.02
MDH2856	5.27	27-23/32"	27-3/8"	9.85	5.27	14.33
MDH2860	5.39	27-23/32"	28"	10.90	5.39	15.64
MDH3030	2.73	31-23/32"	12-3/8"	5.34	2.73	8.75
MDH3036	3.39	31-23/32"	15-3/8"	6.56	3.39	10.23
MDH3040	4.05	31-23/32"	18-3/8"	7.77	4.05	11.71
MDH3046	4.71	31-23/32"	21-3/8"	8.99	4.71	13.19
MDH3050	5.37	31-23/32"	24-3/8"	10.20	5.37	14.67
MDH3056	6.03	31-23/32"	27-3/8"	11.42	6.03	16.15
MDH3060	6.17	31-23/32"	28"	12.63	6.17	17.63
MDH3230	2.90	33-23/32"	12-3/8"	5.71	2.90	9.24
MDH3236	3.60	33-23/32"	15-3/8"	7.01	3.60	10.81
MDH3240	4.30	33-23/32"	18-3/8"	8.31	4.30	12.37
MDH3246	5.01	33-23/32"	21-3/8"	9.60	5.01	13.93
MDH3250	5.71	33-23/32"	24-3/8"	10.90	5.71	15.49
MDH3256	6.41	33-23/32"	27-3/8"	12.20	6.41	17.06
MDH3260	7.11	33-23/32"	30-3/8"	13.50	7.11	18.62
MDH3630	3.24	37-23/32"	12-3/8"	6.44	3.24	10.23
MDH3636	4.03	37-23/32"	15-3/8"	7.91	4.03	11.96
MDH3640	4.81	37-23/32"	18-3/8"	9.37	4.81	13.69
MDH3646	5.60	37-23/32"	21-3/8"	10.84	5.60	15.42

Product #	Sq. Ft. Clear Opg.	Clear Opening		Sq. Ft. D.L.O.	Sq. Ft. Vent	Sq. Ft. of Unit Frame Dim.
		Width	Height			
New Construction Double Hungs (All Glastra) Continued						
MDH3650	6.38	37-23/32"	24-3/8"	12.30	6.38	17.15
MDH3656	7.17	37-23/32"	27-3/8"	13.77	7.17	18.88
MDH3660	7.33	37-23/32"	28"	15.23	7.33	20.61
MDH4030	3.76	43-23/32"	12-3/8"	7.54	3.76	11.71
MDH4036	4.67	43-23/32"	15-3/8"	9.26	4.67	13.69
MDH4040	5.58	43-23/32"	18-3/8"	10.97	5.58	15.67
MDH4046	6.49	43-23/32"	21-3/8"	12.69	6.49	17.65
MDH4050	7.40	43-23/32"	24-3/8"	14.40	7.40	19.63
MDH4056	8.31	43-23/32"	27-3/8"	16.12	8.31	21.61
MDH4060	8.50	43-23/32"	28"	17.83	8.50	23.59

Product #	Sq. Ft. Clear Opg.	Clear Opening		Sq. Ft. D.L.O.	Sq. Ft. Vent	Sq. Ft. of Unit Frame Dim.
		Width	Height			
New Construction Double Hungs (Glastra/Wood)						
MNCDH1630	1.18	13-23/32"	12-3/8"	2.04	1.18	4.31
MNCDH1636	1.46	13-23/32"	15-3/8"	2.51	1.46	5.04
MNCDH1640	1.75	13-23/32"	18-3/8"	2.97	1.75	5.77
MNCDH1646	2.04	13-23/32"	21-3/8"	3.44	2.04	6.50
MNCDH1650	2.32	13-23/32"	24-3/8"	3.90	2.32	7.23
MNCDH1656	2.61	13-23/32"	27-3/8"	4.36	2.61	7.96
MNCDH1660	2.67	13-23/32"	28"	4.83	2.67	8.69
MNCDH2030	1.69	19-23/32"	12-3/8"	3.14	1.69	5.79
MNCDH2036	2.11	19-23/32"	15-3/8"	3.86	2.11	6.77
MNCDH2040	2.52	19-23/32"	18-3/8"	4.57	2.52	7.75
MNCDH2046	2.93	19-23/32"	21-3/8"	5.29	2.93	8.73
MNCDH2050	3.34	19-23/32"	24-3/8"	6.00	3.34	9.71
MNCDH2056	3.75	19-23/32"	27-3/8"	6.71	3.75	10.69
MNCDH2060	3.83	19-23/32"	28"	7.43	3.83	11.67
MNCDH2630	2.21	25-23/32"	12-3/8"	4.24	2.21	7.27
MNCDH2636	2.75	25-23/32"	15-3/8"	5.21	2.75	8.50
MNCDH2640	3.28	25-23/32"	18-3/8"	6.17	3.28	9.73
MNCDH2646	3.82	25-23/32"	21-3/8"	7.14	3.82	10.96
MNCDH2650	4.35	25-23/32"	24-3/8"	8.10	4.35	12.19
MNCDH2656	4.89	25-23/32"	27-3/8"	9.06	4.89	13.42
MNCDH2660	5.00	25-23/32"	28"	10.03	5.00	14.65
MNCDH2830	2.38	27-23/32"	12-3/8"	4.61	2.38	7.77
MNCDH2836	2.96	27-23/32"	15-3/8"	5.66	2.96	9.08
MNCDH2840	3.54	27-23/32"	18-3/8"	6.71	3.54	10.39
MNCDH2846	4.11	27-23/32"	21-3/8"	7.75	4.11	11.70
MNCDH2850	4.69	27-23/32"	24-3/8"	8.80	4.69	13.02
MNCDH2856	5.27	27-23/32"	27-3/8"	9.85	5.27	14.33
MNCDH2860	5.39	27-23/32"	28"	10.90	5.39	15.64
MNCDH3030	2.73	31-23/32"	12-3/8"	5.34	2.73	8.75

NOTE: For the most up-to-date data, please visit **kolbewindows.com**
Shaded units meet most national building codes for emergency escape and rescue requirements.

606 Carteret 114 of 121

CLEAR OPENING DIMENSIONS

Product #	Sq. Ft. Clear Opg.	Clear Opening		Sq. Ft. D.L.O.	Sq. Ft. Vent	Sq. Ft. of Unit Frame Dim.
		Width	Height			
New Construction Double Hungs (Glastra/Wood) Continued						
MNCDH3036	3.39	31-23/32"	15-3/8"	6.56	3.39	10.23
MNCDH3040	4.05	31-23/32"	18-3/8"	7.77	4.05	11.71
MNCDH3046	4.71	31-23/32"	21-3/8"	8.99	4.71	13.19
MNCDH3050	5.37	31-23/32"	24-3/8"	10.20	5.37	14.67
MNCDH3056	6.03	31-23/32"	27-3/8"	11.42	6.03	16.15
MNCDH3060	6.17	31-23/32"	28"	12.63	6.17	17.63
MNCDH3430	3.07	35-23/32"	12-3/8"	6.08	3.07	9.74
MNCDH3436	3.81	35-23/32"	15-3/8"	7.46	3.81	11.38
MNCDH3440	4.56	35-23/32"	18-3/8"	8.84	4.56	13.03
MNCDH3446	5.30	35-23/32"	21-3/8"	10.22	5.30	14.68
MNCDH3450	6.05	35-23/32"	24-3/8"	11.60	6.05	16.32
MNCDH3456	6.79	35-23/32"	27-3/8"	12.98	6.79	17.97
MNCDH3460	8.02	35-23/32"	32-5/16"	14.36	8.02	19.61
MNCDH3630	3.24	37-23/32"	12-3/8"	6.44	3.24	10.23
MNCDH3636	4.03	37-23/32"	15-3/8"	7.91	4.03	11.96
MNCDH3640	4.81	37-23/32"	18-3/8"	9.37	4.81	13.69
MNCDH3646	5.60	37-23/32"	21-3/8"	10.84	5.60	15.42
MNCDH3650	6.38	37-23/32"	24-3/8"	12.30	6.38	17.15
MNCDH3656	7.17	37-23/32"	27-3/8"	13.77	7.17	18.88
MNCDH3660	7.33	37-23/32"	28"	15.23	7.33	20.61
MNCDH4030	3.76	43-23/32"	12-3/8"	7.54	3.76	11.71
MNCDH4036	4.67	43-23/32"	15-3/8"	9.26	4.67	13.69
MNCDH4040	5.58	43-23/32"	18-3/8"	10.97	5.58	15.67
MNCDH4046	6.49	43-23/32"	21-3/8"	12.69	6.49	17.65
MNCDH4050	7.40	43-23/32"	24-3/8"	14.40	7.40	19.63
MNCDH4056	8.31	43-23/32"	27-3/8"	16.12	8.31	21.61
MNCDH4060	8.50	43-23/32"	28"	17.83	8.50	23.59

Product #	Sq. Ft. Clear Opg.	Clear Opening		Sq. Ft. D.L.O.	Sq. Ft. Vent	Sq. Ft. of Unit Frame Dim.
		Width	Height			
New Construction Sliding Windows (All Glastra)						
MNCSL2620	1.31	9-15/16"	18-15/16"	2.40	1.31	4.81
MNCSL2626	1.72	9-15/16"	24-15/16"	3.24	1.72	6.04
MNCSL2630	2.14	9-15/16"	30-15/16"	4.09	2.14	7.27
MNCSL2636	2.55	9-15/16"	36-15/16"	4.93	2.55	8.50
MNCSL2640	2.96	9-15/16"	42-15/16"	5.78	2.96	9.73
MNCSL2646	3.38	9-15/16"	48-15/16"	6.62	3.38	10.96
MNCSL2650	3.79	9-15/16"	54-15/16"	7.47	3.79	12.19
MNCSL2656	4.21	9-15/16"	60-15/16"	8.31	4.21	13.42
MNCSL2660	4.62	9-15/16"	66-15/16"	9.16	4.62	14.65
MNCSL3020	1.70	12-15/16"	18-15/16"	3.11	1.70	5.79
MNCSL3026	2.24	12-15/16"	24-15/16"	4.20	2.24	7.27
MNCSL3030	2.78	12-15/16"	30-15/16"	5.30	2.78	8.75
MNCSL3036	3.32	12-15/16"	36-15/16"	6.39	3.32	10.23
MNCSL3040	3.86	12-15/16"	42-15/16"	7.49	3.86	11.71
MNCSL3046	4.40	12-15/16"	48-15/16"	8.58	4.40	13.19

Product #	Sq. Ft. Clear Opg.	Clear Opening		Sq. Ft. D.L.O.	Sq. Ft. Vent	Sq. Ft. of Unit Frame Dim.
		Width	Height			
New Construction Sliding Windows (All Glastra) Continued						
MNCSL3050	4.94	12-15/16"	54-15/16"	9.68	4.94	14.67
MNCSL3056	5.48	12-15/16"	60-15/16"	10.77	5.48	16.15
MNCSL3060	6.01	12-15/16"	66-15/16"	11.87	6.01	17.63
MNCSL3620	2.10	15-15/16"	18-15/16"	3.81	2.10	6.77
MNCSL3626	2.76	15-15/16"	24-15/16"	5.16	2.76	8.50
MNCSL3630	3.42	15-15/16"	30-15/16"	6.50	3.42	10.23
MNCSL3636	4.09	15-15/16"	36-15/16"	7.85	4.09	11.96
MNCSL3640	4.75	15-15/16"	42-15/16"	9.19	4.75	13.69
MNCSL3646	5.42	15-15/16"	48-15/16"	10.54	5.42	15.42
MNCSL3650	6.08	15-15/16"	54-15/16"	11.89	6.08	17.15
MNCSL3656	6.74	15-15/16"	60-15/16"	13.23	6.74	18.88
MNCSL3660	7.41	15-15/16"	66-15/16"	14.58	7.41	20.61
MNCSL4020	2.49	18-15/16"	18-15/16"	4.52	2.49	7.75
MNCSL4026	3.28	18-15/16"	24-15/16"	6.12	3.28	9.73
MNCSL4030	4.07	18-15/16"	30-15/16"	7.71	4.07	11.71
MNCSL4036	4.86	18-15/16"	36-15/16"	9.31	4.86	13.69
MNCSL4040	5.65	18-15/16"	42-15/16"	10.90	5.65	15.67
MNCSL4046	6.44	18-15/16"	48-15/16"	12.50	6.44	17.65
MNCSL4050	7.23	18-15/16"	54-15/16"	14.09	7.23	19.63
MNCSL4056	8.01	18-15/16"	60-15/16"	15.69	8.01	21.61
MNCSL4060	8.80	18-15/16"	66-15/16"	17.28	8.80	23.59
MNCSL4620	2.89	21-15/16"	18-15/16"	5.23	2.89	8.73
MNCSL4626	3.80	21-15/16"	24-15/16"	7.08	3.80	10.96
MNCSL4630	4.71	21-15/16"	30-15/16"	8.92	4.71	13.19
MNCSL4636	5.63	21-15/16"	36-15/16"	10.77	5.63	15.42
MNCSL4640	6.54	21-15/16"	42-15/16"	12.61	6.54	17.65
MNCSL4646	7.46	21-15/16"	48-15/16"	14.46	7.46	19.88
MNCSL4650	8.37	21-15/16"	54-15/16"	16.30	8.37	22.11
MNCSL4656	9.28	21-15/16"	60-15/16"	18.15	9.28	24.34
MNCSL4660	10.20	21-15/16"	66-15/16"	19.99	10.20	26.56
MNCSL5020	3.28	24-15/16"	18-15/16"	5.94	3.28	9.71
MNCSL5026	4.32	24-15/16"	24-15/16"	8.04	4.32	12.19
MNCSL5030	5.36	24-15/16"	30-15/16"	10.13	5.36	14.67
MNCSL5036	6.40	24-15/16"	36-15/16"	12.23	6.40	17.15
MNCSL5040	7.44	24-15/16"	42-15/16"	14.32	7.44	19.63
MNCSL5046	8.48	24-15/16"	48-15/16"	16.42	8.48	22.11
MNCSL5050	9.51	24-15/16"	54-15/16"	18.51	9.51	24.59
MNCSL5056	10.55	24-15/16"	60-15/16"	20.61	10.55	27.06
MNCSL5060	11.59	24-15/16"	66-15/16"	22.70	11.59	29.54
MNCSL6020	4.07	30-15/16"	18-15/16"	7.36	4.07	11.67
MNCSL6026	5.36	30-15/16"	24-15/16"	9.95	5.36	14.65
MNCSL6030	6.65	30-15/16"	30-15/16"	12.55	6.65	17.63
MNCSL6036	7.94	30-15/16"	36-15/16"	15.14	7.94	20.61
MNCSL6040	9.23	30-15/16"	42-15/16"	17.74	9.23	23.59
MNCSL6046	10.51	30-15/16"	48-15/16"	20.34	10.51	26.56
MNCSL6050	11.80	30-15/16"	54-15/16"	22.93	11.80	29.54
MNCSL6056	13.09	30-15/16"	60-15/16"	25.53	13.09	32.52
MNCSL6060	14.38	30-15/16"	66-15/16"	28.12	14.38	35.50

NOTE: For the most up-to-date data, please visit **kolbewindows.com**
g codes for emergency escape

606 Carteret 115 of 121

Product #	Sq. Ft. Clear Opg.	Clear Opening		Sq. Ft. D.L.O.	Sq. Ft. Vent	Sq. Ft. of Unit Frame Dim.
		Width	Height			
New Construction Sliding Windows (Glastra/Wood)						
MNCSL2620	1.30	9-7/8"	18-15/16"	2.40	1.30	4.81
MNCSL2626	1.71	9-7/8"	24-15/16"	3.24	1.71	6.04
MNCSL2630	2.12	9-7/8"	30-15/16"	4.09	2.12	7.27
MNCSL2636	2.53	9-7/8"	36-15/16"	4.93	2.53	8.50
MNCSL2640	2.94	9-7/8"	42-15/16"	5.78	2.94	9.73
MNCSL2646	3.36	9-7/8"	48-15/16"	6.62	3.36	10.96
MNCSL2650	3.77	9-7/8"	54-15/16"	7.47	3.77	12.19
MNCSL2656	4.18	9-7/8"	60-15/16"	8.31	4.18	13.42
MNCSL2660	4.59	9-7/8"	66-15/16"	9.16	4.59	14.65
MNCSL3020	1.69	12-7/8"	18-15/16"	3.11	1.69	5.79
MNCSL3026	2.23	12-7/8"	24-15/16"	4.20	2.23	7.27
MNCSL3030	2.77	12-7/8"	30-15/16"	5.30	2.77	8.75
MNCSL3036	3.30	12-7/8"	36-15/16"	6.39	3.30	10.23
MNCSL3040	3.84	12-7/8"	42-15/16"	7.49	3.84	11.71
MNCSL3046	4.38	12-7/8"	48-15/16"	8.58	4.38	13.19
MNCSL3050	4.91	12-7/8"	54-15/16"	9.68	4.91	14.67
MNCSL3056	5.45	12-7/8"	60-15/16"	10.77	5.45	16.15
MNCSL3060	5.98	12-7/8"	66-15/16"	11.87	5.98	17.63
MNCSL3620	2.09	15-7/8"	18-15/16"	3.81	2.09	6.77
MNCSL3626	2.75	15-7/8"	24-15/16"	5.16	2.75	8.50
MNCSL3630	3.41	15-7/8"	30-15/16"	6.50	3.41	10.23
MNCSL3636	4.07	15-7/8"	36-15/16"	7.85	4.07	11.96
MNCSL3640	4.73	15-7/8"	42-15/16"	9.19	4.73	13.69
MNCSL3646	5.40	15-7/8"	48-15/16"	10.54	5.40	15.42
MNCSL3650	6.06	15-7/8"	54-15/16"	11.89	6.06	17.15
MNCSL3656	6.72	15-7/8"	60-15/16"	13.23	6.72	18.88
MNCSL3660	7.38	15-7/8"	66-15/16"	14.58	7.38	20.61
MNCSL4020	2.48	18-7/8"	18-15/16"	4.52	2.48	7.75
MNCSL4026	3.27	18-7/8"	24-15/16"	6.12	3.27	9.73
MNCSL4030	4.06	18-7/8"	30-15/16"	7.71	4.06	11.71
MNCSL4036	4.84	18-7/8"	36-15/16"	9.31	4.84	13.69
MNCSL4040	5.63	18-7/8"	42-15/16"	10.90	5.63	15.67
MNCSL4046	6.41	18-7/8"	48-15/16"	12.50	6.41	17.65
MNCSL4050	7.20	18-7/8"	54-15/16"	14.09	7.20	19.63
MNCSL4056	7.99	18-7/8"	60-15/16"	15.69	7.99	21.61
MNCSL4060	8.77	18-7/8"	66-15/16"	17.28	8.77	23.59
MNCSL4620	2.88	21-7/8"	18-15/16"	5.23	2.88	8.73
MNCSL4626	3.79	21-7/8"	24-15/16"	7.08	3.79	10.96
MNCSL4630	4.70	21-7/8"	30-15/16"	8.92	4.70	13.19
MNCSL4636	5.61	21-7/8"	36-15/16"	10.77	5.61	15.42
MNCSL4640	6.52	21-7/8"	42-15/16"	12.61	6.52	17.65
MNCSL4646	7.43	21-7/8"	48-15/16"	14.46	7.43	19.88
MNCSL4650	8.35	21-7/8"	54-15/16"	16.30	8.35	22.11
MNCSL4656	9.26	21-7/8"	60-15/16"	18.15	9.26	24.34
MNCSL4660	10.17	21-7/8"	66-15/16"	19.99	10.17	26.56
MNCSL5020	3.27	24-7/8"	18-15/16"	5.94	3.27	9.71
MNCSL5026	4.31	24-7/8"	24-15/16"	8.04	4.31	12.19

Product #	Sq. Ft. Clear Opg.	Clear Opening		Sq. Ft. D.L.O.	Sq. Ft. Vent	Sq. Ft. of Unit Frame Dim.
		Width	Height			
New Construction Sliding Windows (Glastra/Wood) Continued						
MNCSL5030	5.34	24-7/8"	30-15/16"	10.13	5.34	14.67
MNCSL5036	6.38	24-7/8"	36-15/16"	12.23	6.38	17.15
MNCSL5040	7.42	24-7/8"	42-15/16"	14.32	7.42	19.63
MNCSL5046	8.45	24-7/8"	48-15/16"	16.42	8.45	22.11
MNCSL5050	9.49	24-7/8"	54-15/16"	18.51	9.49	24.59
MNCSL5056	10.53	24-7/8"	60-15/16"	20.61	10.53	27.06
MNCSL5060	11.56	24-7/8"	66-15/16"	22.70	11.56	29.54
MNCSL6020	4.06	30-7/8"	18-15/16"	7.36	4.06	11.67
MNCSL6026	5.35	30-7/8"	24-15/16"	9.95	5.35	14.65
MNCSL6030	6.63	30-7/8"	30-15/16"	12.55	6.63	17.63
MNCSL6036	7.92	30-7/8"	36-15/16"	15.14	7.92	20.61
MNCSL6040	9.21	30-7/8"	42-15/16"	17.74	9.21	23.59
MNCSL6046	10.49	30-7/8"	48-15/16"	20.34	10.49	26.56
MNCSL6050	11.78	30-7/8"	54-15/16"	22.93	11.78	29.54
MNCSL6056	13.07	30-7/8"	60-15/16"	25.53	13.07	32.52
MNCSL6060	14.35	30-7/8"	66-15/16"	28.12	14.35	35.50

Product #	Sq. Ft. Clear Opg.	Clear Opening		Sq. Ft. D.L.O.	Sq. Ft. Vent	Sq. Ft. of Unit Frame Dim.
		Width	Height			
Sliding Doors: Fixed-Active or Active-Fixed (Complement All Glastra Units)						
V4PD5068	11.36	21-13/16"	75"	22.50	11.36	32.85
V4PD50610	11.66	21-13/16"	77"	23.15	11.66	33.68
V4PD5080	13.78	21-13/16"	91"	27.73	13.78	39.46
V4PD6068	14.49	27-13/16"	75"	28.24	14.49	39.47
V4PD60610	14.87	27-13/16"	77"	29.06	14.87	40.47
V4PD6080	17.58	27-13/16"	91"	34.80	17.58	47.42
V4PD8068	20.74	39-13/16"	75"	39.72	20.74	52.72
V4PD80610	21.29	39-13/16"	77"	40.88	21.29	54.05
V4PD8080	25.16	39-13/16"	91"	48.95	25.16	63.34
Sliding Doors: Fixed-Fixed-Active or Active-Fixed-Fixed (Complement All Glastra Units)						
V4PD9068	15.46	29-11/16"	75"	27.93	15.46	59.35
V4PD90610	15.87	29-11/16"	77"	28.74	15.87	60.84
V4PD9080	18.76	29-11/16"	91"	34.42	18.76	71.29
Sliding Doors: Fixed-Active-Fixed (Complement All Glastra Units)						
V4PD9068	14.53	27-57/64"	75"	27.93	14.53	59.35
V4PD90610	14.91	27-57/64"	77"	28.74	14.91	60.84
V4PD9080	17.63	27-57/64"	91"	34.42	17.63	71.29
Sliding Doors: Fixed-Active-Active-Fixed (Complement All Glastra Units)						
V4PD12068	28.08	53-59/64"	75"	28.72	28.08	79.22
V4PD120610	28.83	53-59/64"	77"	29.55	28.83	81.22
V4PD12080	34.08	53-59/64"	91"	35.39	34.08	95.17

NOTE: For the most up-to-date data, please visit **kolbewindows.com**
Shaded units meet most national building codes for emergency escape and rescue requirements.

606 Carteret 116 of 121

CLEAR OPENING DIMENSIONS

Product #	Sq. Ft. Clear Opg.	Clear Opening		Sq. Ft. D.L.O.	Sq. Ft. Vent	Sq. Ft. of Unit Frame Dim.
		Width	Height			
Sliding Doors: 2-wide (Complement Glastra/Wood Units)						
GAU41166M	11.30	21-1/2"	75-11/16"	23.44	11.30	32.57
GAU51166M	14.45	27-1/2"	75-11/16"	29.36	14.45	39.20
GAU71166M	20.76	39-1/2"	75-11/16"	41.21	20.76	52.45
GAU41180M	13.69	21-1/2"	91-11/16"	28.72	13.69	39.13
GAU51180M	17.51	27-1/2"	91-11/16"	35.97	17.51	47.09
GAU71180M	25.15	39-1/2"	91-11/16"	50.48	25.15	63.00
Sliding Doors: 3-wide (Complement Glastra/Wood Units)						
GAU7766M	11.30	21-1/2"	75-11/16"	35.16	11.30	50.24
GAU9166M	14.45	27-1/2"	75-11/16"	44.04	14.45	60.18
GAU12166M	20.76	39-1/2"	75-11/16"	61.81	20.76	80.05
GAU7780M	13.69	21-1/2"	91-11/16"	43.08	13.69	60.35
GAU9180M	17.51	27-1/2"	91-11/16"	53.96	17.51	72.29
GAU12180M	25.15	39-1/2"	91-11/16"	75.73	25.15	96.16

Product #	Sq. Ft. Clear Opg.	Clear Opening		Sq. Ft. D.L.O.	Sq. Ft. Vent	Sq. Ft. of Unit Frame Dim.
		Width	Height			
Inswing Doors (Complement Glastra/Wood Units)						
UXD2680M	16.52	25-3/4"	92-3/8"	10.83	17.72	20.07
UXD3080M	20.37	31-3/4"	92-3/8"	14.19	21.57	24.05
UXD2666M	13.65	25-3/4"	76-11/32"	8.68	14.65	16.70
UXD3066M	16.83	31-3/4"	76-11/32"	11.37	17.83	20.01
Inswing Doors: 2-wide (Complement Glastra/Wood Units)						
UXD41166M	13.65	25-3/4"	76-11/32"	17.35	14.65	32.81
UXD51166M	16.83	31-3/4"	76-11/32"	22.74	17.83	39.44
UXD41180M	16.52	25-3/4"	92-3/8"	21.65	17.72	39.43
UXD51180M	20.37	31-3/4"	92-3/8"	28.38	21.57	47.39

Product #	Sq. Ft. Clear Opg.	Clear Opening		Sq. Ft. D.L.O.	Sq. Ft. Vent	Sq. Ft. of Unit Frame Dim.
		Width	Height			
Outswing Doors (Complement Glastra/Wood Units)						
UXD2666M	13.26	25-5/32"	75-29/32"	8.44	14.31	16.72
UXD3066M	16.42	31-5/32"	75-29/32"	11.14	17.48	20.03
UXD2680M	16.06	25-5/32"	91-29/32"	10.52	17.33	20.08
UXD3080M	19.89	31-5/32"	91-29/32"	13.89	21.16	24.06
Outswing Doors: 2-wide (Complement Glastra/Wood Units)						
UXD41166M	13.26	25-5/32"	75-29/32"	16.88	14.31	32.57
UXD51166M	16.42	31-5/32"	75-29/32"	22.28	17.48	39.20
UXD41180M	16.06	25-5/32"	91-29/32"	21.04	17.33	39.13
UXD51180M	19.89	31-5/32"	91-29/32"	27.78	21.16	47.09

NOTE: For the most up-to-date data, please visit **kolbewindows.com**
Shaded units meet most national building codes for emergency escape and rescue requirements.

606 Carteret 117 of 121





KOLBE®
WINDOWS & DOORS
We're for the visionaries.®

1323 S. 11th Avenue | Wausau, WI 54401-5998
715.842.5666

www.kolbewindows.com

© 2021 Kolbe & Kolbe Millwork Co., Inc. Kolbe & Kolbe Millwork Co., Inc. reserves the right to change specifications without notice. The photography featured herein does not necessarily imply an endorsement of Kolbe products by the property owners. Photography used may not represent current Kolbe product features and options.
Front cover photo © Spacecrafting Photography | Denali Custom Homes | Redstone Interiors

5160850-15K-1121-SP

Historic Review Board Meeting Staff Report

From the Department of Community and Economic Development
10 August 2022

1 Summary of Request

606 Carteret Street, Alterations
Applicant: Eric Berman, Berman Property Group, LLC

The applicant is requesting Final Approval for alterations to an existing structure at 606 Carteret Street.

Background: This is the first submission for this project.

2 Facts

Property Address:	**606 Carteret Street**
Parcel ID:	R120-004-000-0628-0000
Case Number:	**22-52 HRB.1**
Applicant:	**Eric Berman, Berman Property Group, LLC** **Summerall Custom Construction**
Zoning:	T4-N
Use:	Multi-family

District Development Standards for T4-N:

- **Setback requirements – Primary Structure:**
  - *Front-0' min.- 15' max.*
  - *Rear setback – 10' min.*
  - *Side Corner/Alley – 0'min. – 10' max.*
  - *Side Interior – 5' min, or 0' if attached.*
- **Maximum Building Height: 4 stories max;** 3.5 stories max in & fronting Historic District & interior lots along Allison Rd.
- **Frontage Build-Out:** 60% min; 85% max.
- **Impervious Surface Coverage:** 70% maximum for rooftops, additional 10% allowed.

References:

- The Beaufort Code
- The Beaufort Preservation Manual
- The Beaufort Preservation Manual Supplement

3 STAFF COMMENTS

Staff Acknowledgements:

A. This structure is listed on the National Register of Historic Places List of Contributing Resources, constructed ca. 1900 and listed as a 2-story, frame dwelling.

B. The structure has since been broken up into different units.

Staff Conditions:

1. Staff supports the in-kind repair of elements such as the decking boards, stairs, banisters and stringers, and pine lap siding, as well as repainting the banisters and shutters, siding, and deck boards to match existing.

2. Applicant stated "we'd like to replace all windows with the same species of wood window (pine) but ensure they're functional and up to code (i.e. DP rating, UV rating, etc.)." In follow-up correspondence with the applicant, they are proposing to replace the wood windows with Kolbe Forgent series windows, which is made of a proprietary fiberglass and UV stable polymer blend.

3. While staff understands the existing wood windows are in disrepair, "historic windows should be replaced only if they are beyond repair…repair or replace in-kind" (Supplement p. 38). The existing windows are true-divided lite wood windows (likely original to the house) and "the profiles of window frames, sash, mullions, muntins, beads, and stops are critical elements to the appearance and character of the window" (Supplement p. 38). Staff does not support the window replacement with modern fiberglass clad units. Staff recommends the applicant restore, repair, and replace (in-kind) only those elements missing or too far deteriorated.

4. Staff recommends the applicant consider an interior (or exterior) storm window at each window to assist with energy efficiency.

STAFF RECOMMENDATION:

Denial of the replacement Kolbe fiberglass windows with Conditions Noted.

CITY STAFF INTRODUCTION

401 King Street

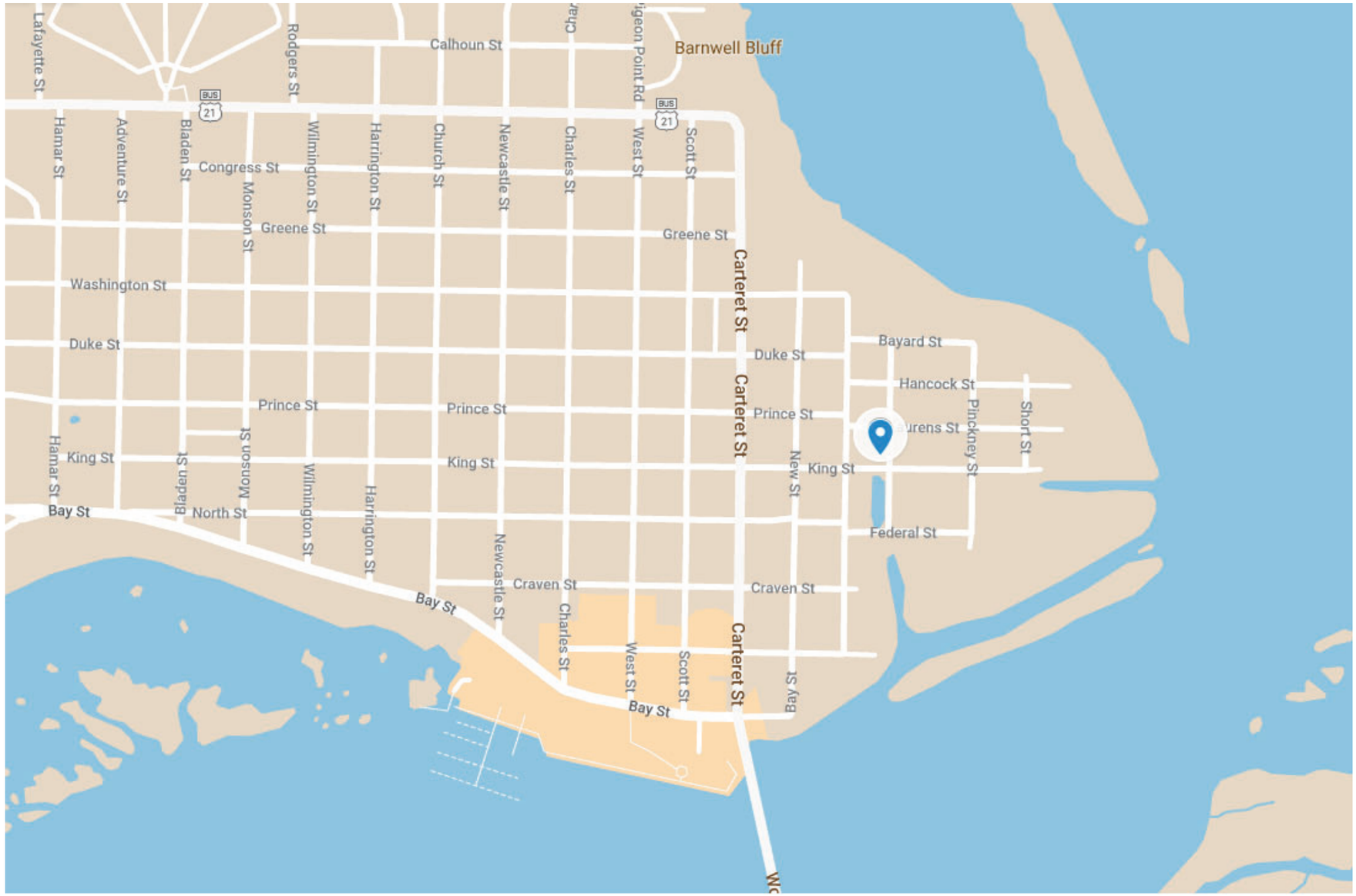
Barnwell Bluff
Calhoun St
Lafayette St
Rodgers St
Pigeon Point Rd
BUS 21
Hamar St
Adventure St
Bladen St
Congress St
Monson St
Wilmington St
Harrington St
Church St
Newcastle St
Charles St
West St
Scott St
Greene St
Carteret St
Washington St
Duke St
Bayard St
Hancock St
Pinckney St
Short St
Prince St
King St
New St
Bay St
North St
Federal St
Craven St









From Federal Street



From Hamilton Street

APPLICANT PRESENTATION

401 King Street

2240 HRB.1

DEVELOPMENT REVIEW PROCESS
HISTORIC REVIEW APPLICATION

Community & Economic Development Department
1911 Boundary Street, Beaufort, South Carolina, 29902
p. (843) 525-7011 / f. (843) 986-5606
Email: development@cityofbeaufort.org /www.cityofbeaufort.org

☐ Staff Review
☐ Board Review

Application Fee:
see attached schedule

OFFICE USE ONLY: **Date Filed:** 6/2 **Application #:** 23859 **Zoning District:** T4-HN
BCAGHS Survey: ☐ Yes ☐ No

Schedule: The Historic Review Board (HRB) typically meets the 2nd Wednesday of each month at 2pm. The complete schedule, along with the list of deadlines, may be found here - http://www.cityofbeaufort.org/historic-review-board.aspx

Submittal Requirements: All forms and information shall be submitted digitally + 5 hardcopies of all documents. In addition to a complete application form, applicants shall submit the required items according to the checklists on the subsequent page.

Review Request: ☐ Conceptual ☐ Preliminary ☐ Final ☐ Bailey Bill Approval* ☐ Change After Certification
**Requires a Bailey Bill – Part A Preliminary Review Application Form*

Pursuant to Section 6-29-1145 of the South Carolina Code of Laws, is this tract or parcel restricted by any recorded covenant that is contrary to, conflicts with, or prohibits the activity described in this application? ☐ Yes ☐ No

Applicant, Property, and Project Information

Applicant Name: ~~Alli Efird, Titan Solar Power~~ SC Inc- Authorized Agent

Applicant Address: 1201 Carrier Dr. Charlotte, NC. 28216

Applicant E-mail: scpermitting@titansolarpower.com Applicant Phone Number: 980-621-8816

Applicant Title: ☐ Homeowner ☐ Tenant ☐ Architect ☐ Engineer ☐ Developer

Owner (if other than the Applicant): Sarah Post

Owner Address: 401 King St

Project Name: Post- PV System

Property Address: 401 King St

Property Identification Number *(Tax Map & Parcel Number)*: R120 004 000 0650 0000

Date Submitted: 6/2/2022

Certification of Correctness: I/we certify that the information in this application is correct.

Applicant's Signature: Allison Efird Date: 6/2/2022

Owner's Signature: Sarah Post Date: 6/2/2022

(The owner's signature is required if the applicant is not the owner.)

DEVELOPMENT REVIEW PROCESS
HISTORIC REVIEW APPLICATION

Community & Economic Development Department
1911 Boundary Street, Beaufort, South Carolina, 29902
p. (843) 525-7011 / f. (843) 986-5606
Email: development@cityofbeaufort.org / www.cityofbeaufort.org

Project Name: Post- PV System

Property Size in Acres: _____ Proposed Building Use: Residential

Nature of Work (check all that apply):

☐ New Construction, Primary Structure ☐ New Construction, Primary Structure ■ Alterations / Additions

☐ Demolition* ☐ Relocation* **Demolition and Relocation requires a public hearing*

Building Square Footage (if multiple buildings, please list each one and their square footage by floor):

_____

Is this project a redevelopment project: ☐ Y ☑ N

Are there existing buildings on the site? ☑ Y ☐ N if yes, will they remain? ☑ Y ☐ N

Provide a brief Project Narrative (if requesting Bailey Bill Approval, this section may be left blank):

installing 26 roof-mounted solar panels on existing structure

CONTACT INFORMATION –

Attention: Julie A. Bachety, Administrative Assistant II
Community & Economic Development Department
1911 Boundary Street, Beaufort, South Carolina 29902
E-Mail: development@cityofbeaufort.org Phone: (843) 525-7011 | Fax: (843) 986-5606

Revised June 10, 2021

HISTORIC DISTRICT REVIEW
CERTIFICATE OF APPROPRIATENESS

Application Requirements

The Beaufort Code applies to all projects; the Historic District Infill Design Guidelines in Section 4.7 apply to new construction in the Historic District.

The Historic Review Board also utilizes the following documents when evaluating projects:

- *The Beaufort Preservation Manual* & *Supplement:* these standards apply to New Construction, Alterations and Additions to Contributing Structures, and Demolition located everywhere in the Historic District except the Northwest Quadrant.
- *The Northwest Quadrant Design Guidelines:* these standards apply to New Construction, Alterations and Additions to Contributing Structures, and Demolition located in the Northwest Quadrant of the Historic District
- The Secretary of the Interior's *Standards for Rehabilitation:* these standards apply to all modifications to Contributing Structures throughout the Historic District

All documents can be found online at www.cityofbeaufort.org

- The Beaufort Code can be found here: http://www.cityofbeaufort.org/434/Zoning
- Documents specific to the Historic District, a map of the Historic District and neighborhoods, and the list of Contributing and Non-Contributing Structures can be found here: http://www.cityofbeaufort.org/350/1997-Beaufort-County-Historic-Sites-Surv

NOTE 1: If a New Construction project also requires major demolition a separate application is required. (Refer to the Checklist for Demolition on page 3).

NOTE 2: Applications will not be considered complete until all the required items have been submitted. Incomplete applications will not be placed on the agenda.

NOTE 3: Applications are to be compiled in the order in which the applicant plans to present the application to the Board during the meeting.

401 King 9 of 35

Submission Requirements for New Construction and Alterations or Additions

Please submit DIGITAL FILES ONLY via email to: development@cityofbeaufort.org

*Initial submittals should show existing and proposed conditions. For all subsequent submittals, architectural drawings should show and clearly label existing conditions, the previous proposal, and the current proposed. Each version of the same drawing should be adjacent to the others in the application for easy review.

***This Application Requirements Checklist MUST be included in applications, with submitted items checked.**

Conceptual Review

- ☐ **Existing Context:** Color photographs of the existing structure and the adjacent structures.
- ☐ **Plat:** A plat indicating the tax map and parcel number, existing structure(s), setbacks, existing trees, and proposed construction footprint.
- ☐ **Site Plan:** A site plan, to scale, indicating the location of the existing structure on the lot, proposed new structure, any site modifications (parking, paths, landscaping, tree removal, etc…), any new or existing mechanical equipment and screening area, and percentage of the total impervious paving. The plan should also include any connections to the public right of way (street and/or sidewalk), and grade elevations of the street and/or sidewalk and the proposed construction at the first floor.
- ☐ **Design:** One or more drawings that convey the intent of the proposal. This may include: floor plans, elevations, and building sections. They should display massing and scale of new construction and how it relates to the existing structure or surrounding context. For new construction and additions, this drawing should include a street elevation and/or a street section showing height and width relationships to existing adjacent buildings.
- ☐ **3-D Rendering:** A 3-D rendering, or physical scale model, showing the height, mass and scale ofthe proposed building in its context is required for all structures except single-family and 2-3 unit residential buildings.
- ☐ **Pre-Application Conference:** A Pre-application conference is required for all commercial new construction and substantial commercial renovation projects. The requirement for an Archeological Impact Assessment will be determined at this meeting.

Preliminary Review: All the documents required for Conceptual Review, PLUS:

- ☐ **Floor Plans:** Proposed floor plans of all levels of the building, including square footage. For Alterations or Additions, existing conditions drawings of the floor plan are also required, showing the area and square footage affected by the addition.
- ☐ **Elevations:** Elevation drawings of all sides of the building, including heights – height above grade, floor-to-floor heights, eave height and ridge height (if applicable). For Alterations or Additions, existing conditions drawings of all four elevations are also required.
- ☐ **Color Rendering:** A colored version of at least one elevation, noting proposed materials and colors.
- ☐ Additional on-site representation, such as a height story pole, and corner staking of the foundation, may be required.
- ☐ A Certified Arborist report may be required if grand trees are affected by the project.

Final Review: All the documents required for Preliminary Review, PLUS:

- ☐ **Details:** A typical wall section(s), window details, door details, eave details, porch details, and any other details characteristic to the building are required.
- ☐ **Material Samples and Cut Sheets:** Applicant to submit cut sheets for all exterior building materials, to include roof and typical roof details, doors, windows, dryer vents, exterior lighting, etc. Samples of windows, lighting and building materials may be required at Staff's discretion.
- ☐ **Final Materials List:** A final list, including colors, is required.
- ☐ **Landscaping Plan:** A landscaping plan is required for commercial projects. It shall include a schedule detailing materials and colors of all plants and landscape materials, all existing trees, with the trees to be removed noted, existing and proposed grading, and any exterior lighting proposed.

Submission Requirements for Change After Certification

Please submit DIGITAL FILES ONLY via email to: development@cityofbeaufort.org

Change After Certification:

- ☐ **Copy of Certificate of Appropriateness** received with previous approval.
- ☐ **Previously Approved Drawings:** Applicant to submit **complete** set of previously approved documents. Current proposed documents to be interlaced between previously approved documents and must be formatted to match previously approved. For example, previously approved elevations should be followed by current proposed. Drawings to be clearly noted as "Previously Approved" or "Current Proposed", and all proposed revisions in the current proposed drawings must be clouded and noted.

Submission Requirements for Demolition or Relocation

Please submit DIGITAL FILES ONLY via email to: development@cityofbeaufort.org

Note: A public hearing must be held for Demolition or Relocation. All notification requirements must be met by the City.

- ☐ A written statement describing the history of the architectural significance of the structure to be demolished, the structural or physical condition of the structure, and the proposed use of the site after demolition or relocation. The statement should also include any recent attempt(s) to sell the property, or move the structure. A recent appraisal with comparisons is strongly encouraged. You may refer to *The Beaufort County Above Ground Resources Survey of 1997,* or consult city staff or the Historic Beaufort Foundation for verification of the date of construction and historic information.
- ☐ Tax map or plat showing the location of the property
- ☐ Color photographs of all sides of the structure.
- ☐ Color photographs of adjoining properties.
- ☐ A written report by an engineer, regarding the structural condition of the building, is required if the reason for demolition is related to the structural integrity of the building.

401 King 12 of 35

HISTORIC DISTRICT REVIEW BOARD
FEE SCHDULE

(As of July 1, 2020)

BOARD REVIEW FEES:

Single-family residential projects (board review)	$100.00
Multifamily and commercial projects (board review)	$250.00
Change After Certification	$100.00
Demolition (whole structure)	$250.00
Special Board Meeting	$500.00

Post facto applications shall be triple the normal fee.

STAFF REVIEW FEES:

Single Family and 2/3-unit buildings not in a historic district are exempt.

Type 1

Renovations/Improvements (not including additions), ≤ 50% of the value of the structures

Value	Fee
Improvements ≤ $5,000	$50
Improvements > $5,000 but ≤ $25,000	$50 + 0.25% x value above $5,000
Improvements > $25,000	$100 + 0.20% x value above $25,000

Type 2

- Any single-family and 2/3-unit residential addition in a historic district: $50
- All other additions: $500 base fee + $0.05/square foot of addition.

Type 3

Review for new construction and for renovations/improvements totaling over 50% of the value of the structure:

- Single-family and 2-3 unit residential in the historic district
- ≤ 10,000 square feet: $500 base fee + 0.05/square foot of building

- > $10,000 square feet: $1,000 base fee + $0.05/square foot of building for the first 100,000 square feet of building. For additional square footage over 100,000, $0.02/square foot.

TITAN SOLAR POWER

1-855-SAY-SOLAR
525 W BASELINE ROAD
MESA, AZ 85210
EC.0101592

David C. Hernandez Digitally signed by David C. Hernandez Date: 2022.06.28 16:41:05 -04:00

SOUTH CAROLINA LICENSED PROFESSIONAL ENGINEER No. 33919 DAVID C. HERNANDEZ
Exp. 06/30/22
06/28/22

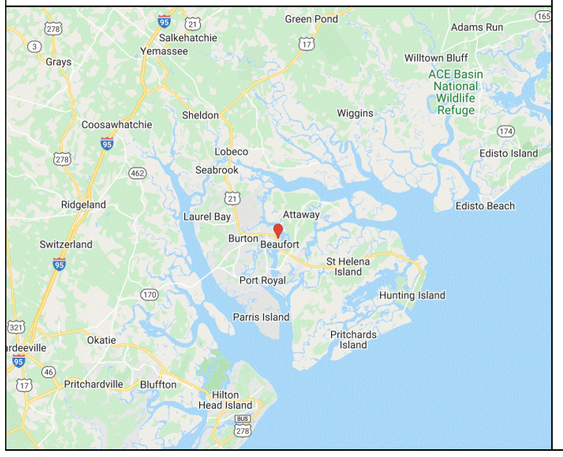

INTERACTIVE RESIDENTIAL SOLAR PHOTOVOLTAIC SYSTEM
401 KING ST
BEAUFORT, SC 29902

6.400 kW DC-STC / 7.600 kW-AC
28/JUN/22

2



2

SYSTEM SPECIFICATIONS

SYSTEM SIZE: 6.400 kW
MODULE: Q.PEAK DUO BLK ML-G10+ 400W
NUMBER OF PANELS: 16
INVERTER: SE5000H-US
OPTIMIZER: P401
RACKING SYSTEM: EVEREST CROSSRAIL 44-X

AHJ: BEAUFORT, SC
UTILITY: DOMINION ENERGY - SC

GOVERNING CODE:

IBC 2018
IRC 2018
IFC 2018
NEC 2017

EXACTUS ENERGY
NEW AGE ENGINEERING

+1 833 392 2887
208-888 DUPONT STREET
TORONTO, ON

3

SHEET INDEX

C1 - COVER PAGE
N1 - GENERAL NOTES
N2 - REVISION TABLE
S1 - SITE PLAN
S2 - PANEL LAYOUT
S3 - WINDZONES
S4 - STRUCTURAL DETAIL 1
S5 - STRUCTURAL DETAIL 2
S6 - ELEVATION PLAN
E1 - LINE DIAGRAM
E2 - WARNING LABELS
E3 - PLACARD
A1 - PANEL SPECIFICATIONS
A2 - RACKING SPECIFICATIONS
A3 - MOUNTING SPECIFICATIONS 1
A4 - MOUNTING SPECIFICATIONS 2
A5 - INVERTER SPECIFICATIONS
A6 - OPTIMIZER SPECIFICATIONS
A7 - SAFETY PLAN

3

S6 - ELEVATION PLAN

C1 - COVER PAGE

GENERAL NOTES:

THE INSTALLATION OF PV SYSTEM SHALL BE IN ACCORDANCE WITH THE MOST RECENT NATIONAL ELECTRICAL AND BUILDING CODES AND STANDARDS, AS AMENDED BY JURISDICTION

- PV SYSTEMS SHALL BE PERMITTED TO SUPPLY A BUILDING OR OTHER STRUCTURE IN ADDITION TO ANY OTHER ELECTRICAL SUPPLY SYSTEM(S) [NEC 690.4(A)]
- THE INSTALLATION OF EQUIPMENT AND ALL ASSOCIATED WIRING AND INTERCONNECTION SHALL BE PERFORMED ONLY BY QUALIFIED PERSONS [NEC 690.4(C)]
- EXISTING PLUMBING VENTS, SKYLIGHTS, EXHAUST OUTLETS, VENTILATIONS INTAKE AIR OPENINGS SHALL NOT BE COVERED BY THE SOLAR PHOTOVOLTAIC SYSTEM
- INVERTERS, MOTOR GENERATORS, PHOTOVOLTAIC MODULES, PHOTOVOLTAIC PANELS, AC PHOTOVOLTAIC MODULES, SOURCE-CIRCUIT COMBINERS, AND CHARGE CONTROLLERS INTENDED FOR USE IN PV SYSTEMS SHALL BE LISTED OR FIELD LABELED FOR THE PV APPLICATION [NEC 690.4(B)]
- ALL OUTDOOR EQUIPMENT SHALL BE NEMA 3R RATED (OR BETTER), INCLUDING ALL ROOF MOUNTED TRANSITION BOXES AND SWITCHES.
- ALL EQUIPMENT SHALL BE PROPERLY GROUNDED AND BONDED IN ACCORDANCE WITH NEC ARTICLE 250.
- SYSTEM GROUNDING SHALL BE IN ACCORDANCE WITH NEC 690.41
- FOR PV MODULES, EQUIPMENT GROUNDING CONDUCTORS SMALLER THAN 6AWG SHALL COMPLY WITH NEC 250.12(C) [NEC 690.46]
- ALL PV SYSTEM DC CIRCUIT AND INVERTER OUTPUT CONDUCTORS AND EQUIPMENT SHALL BE PROTECTED AGAINST OVERCURRENT UNLESS STATED OTHERWISE IN NEC 690.9(A)
- OVERCURRENT DEVICES USED IN PV SYSTEM DC CIRCUITS SHALL BE LISTED FOR USE IN PV SYSTEMS [NEC 690.9(B)]
- PV SYSTEM CIRCUITS INSTALLED ON OR IN BUILDINGS SHALL INCLUDE A RAPID SHUTDOWN FUNCTION IN ACCORDANCE WITH NEC 690.12
- DISCONNECTING MEANS SHALL BE LOCATED IN A VISIBLE, READILY ACCESSIBLE LOCATION OR A MAXIMUM OF 10 FEET AWAY FROM THE SYSTEM [NEC 690.13(A)]
- ALL WIRING METHODS SHALL BE IN ACCORDANCE WITH NEC 690.31
- CONNECTORS SHALL REQUIRE A TOOL TO OPEN AND BE MARKED "DO NOT DISCONNECT UNDER LOAD" OR "NOT FOR CURRENT INTERRUPTING". [NEC 690.33(E)]
- ALL GROUNDED CONDUCTORS SHALL BE PROPERLY COLOR IDENTIFIED AS WHITE. [NEC 200.6]
- PV SYSTEM CONNECTED ON THE LOAD SIDE OF THE SERVICE DISCONNECTING MEANS OF THE OTHER SOURCE(S) AT ANY DISTRIBUTION EQUIPMENT ON THE PREMISES SHALL MEET THE FOLLOWING [NEC 705.12(B)]:
  1. EACH SOURCE CONNECTION SHALL BE MADE AT A DEDICATED CIRCUIT BREAKER OF FUSIBLE DISCONNECTING MEANS. [NEC 705.12(B)(1)]
  2. 125 PERCENT OF THE POWER SOURCE OUTPUT CIRCUIT CURRENT SHALL BE USED IN AMPACITY CALCULATIONS. [NEC 705.12(B)(2)]
  3. EQUIPMENT CONTAINING OVERCURRENT DEVICES IN CIRCUITS SUPPLYING POWER TO A BUS BAR OR CONDUCTOR SHALL BE MARKED TO INDICATE THE PRESENCE OF ALL SOURCES. [NEC 705.12(B)(3)]
  4. CIRCUIT BREAKER, IF BACK FED, SHALL BE SUITABLE FOR SUCH OPERATION [NEC 705.12(B)(4)]
- WHEN A BACKFED BREAKER IS THE METHOD OF UTILITY INTERCONNECTION, THE BREAKER SHALL BE INSTALLED AT THE OPPOSITE END OF THE BUS BAR OF THE MAIN BREAKER.
- TO REDUCE FIRE HAZARDS, DC PV SYSTEMS WILL BE EQUIPPED WITH A GROUND FAULT PROTECTION SYSTEM IN ACCORDANCE WITH NEC 690.41(B)
- WHERE GROUND-FAULT PROTECTION IS USED, THE OUTPUT OF AN INTERACTIVE SYSTEM SHALL BE CONNECTED TO THE SUPPLY SIDE OF THE GROUND FAULT PROTECTION [NEC 705.32]
- ALL PLAQUES AND SIGNAGE REQUIRED BY THE LATEST EDITION OF NATIONAL ELECTRICAL CODE. LABEL SHALL BE METALLIC OR PLASTIC, ENGRAVED OR MACHINE PRINTED IN A CONTRASTING COLOR TO THE PLAQUE. PLAQUE SHALL BE UV RESISTANT IF EXPOSED TO SUNLIGHT
- ALL THE NEC REQUIRED WARNING SIGNS, MARKINGS, AND LABELS SHALL BE POSTED ON EQUIPMENT AND DISCONNECTS PRIOR TO ANY INSPECTIONS TO BE PERFORMED BY THE BUILDING DEPARTMENT.
- CONNECTORS SHALL BE OF LATCHING OR LOCKING TYPE. CONNECTORS THAT ARE READILY ACCESSIBLE AND OPERATING AT OVER 30 VOLTS SHALL REQUIRE TOOL TO OPEN AND MARKED "DO NOT DISCONNECT UNDER LOAD" OR "NOT FOR CURRENT INTERRUPTING". [NEC 690.33(C) & (E)(2)]
- FLEXIBLE, FINE-STRANDED CABLES SHALL BE TERMINATED ONLY WITH TERMINALS, LUGS, DEVICES, OR CONNECTORS IN ACCORDANCE WITH NEC 110.14
- WORK CLEARANCES AROUND ELECTRICAL EQUIPMENT WILL BE MAINTAINED PER NEC 110.26(A)(1), 110.26(A)(2) AND 110.26(A)(3)
- ALL EXTERIOR CONDUITS, FITTINGS AND BOXES SHALL BE RAIN-TIGHT AND APPROVED FOR USE IN WET LOCATIONS PER NEC 314.15.
- ROOFTOP MOUNTED PHOTOVOLTAIC PANELS AND MODULES SHALL BE TESTED, LISTED & IDENTIFIED IN ACCORDANCE WITH UL1703
- EACH MODULE TO BE GROUNDED USING THE SUPPLIED CONNECTION POINT PER MANUFACTURER'S REQUIREMENTS. ALL SOLAR MODULES, EQUIPMENT, AND METALLIC COMPONENTS ARE TO BE BONDED. IF THE EXISTING GROUNDING ELECTRODE SYSTEM CAN NOT BE VERIFIED OR IS ONLY METALLIC WATER PIPING, IT IS THE CONTRACTOR'S RESPONSIBILITY TO INSTALL A SUPPLEMENTAL GROUNDING ELECTRODE.
- DC CONDUCTORS SHALL BE RUN IN EMT AND SHALL BE LABELED "CAUTION DC CIRCUIT" OR EQUIV. EVERY 5 FT
- CONFIRM LINE SIDE VOLTAGE AT ELECTRIC UTILITY SERVICE PRIOR TO CONNECTING INVERTER. VERIFY SERVICE VOLTAGE IS WITHIN INVERTER VOLTAGE OPERATIONAL RANGE.
- SERVING UTILITY TO BE NOTIFIED BEFORE ACTIVATION OF PV SYSTEM.
- ELECTRICAL CONTRACTOR TO PROVIDE CONDUIT EXPANSION JOINTS AND ANCHOR CONDUIT RUNS AS REQUIRED PER NEC.
- THE HOMEOWNER IS RESPONSIBLE FOR ENSURING ALL EQUIPMENT OUTSIDE THE SCOPE OF WORK IS NEC COMPLIANT.

SOUTH CAROLINA LICENSED PROFESSIONAL ENGINEER
No. 33919
DAVID C. HERNANDEZ
Exp. 06/30/22
06/28/22

TITAN SOLAR POWER

TITAN SOLAR
PHONE: 1-855-SAY-SOLAR
WWW.TITANSOLARPOWER.COM

PROJECT: 401 KING ST
MUNICIPALITY: BEAUFORT, SC
ZIP CODE: 29902
CLIENT: SARAH H POST
6.400 kW DC-STC/7.600 kW-AC
2

AUTHOR: EE
DATE: 28/JUN/22
REV: C

N1 - GENERAL NOTES

DateD	Description	Mark
5/2/2022	Layout change reflected on plans	1
6/1/2022	System Change to Q.CELL 400 reflected on Plans	2
6/27/2022	Added Elevation plan and Revision Table	3

3

SCALE: NTS

SOUTH CAROLINA LICENSED PROFESSIONAL ENGINEER
No. 33919
DAVID C. HERNANDEZ
Exp. 06/30/22
06/28/22

TITAN SOLAR POWER

TITAN SOLAR
PHONE: 1-855-SAY-SOLAR
WWW.TITANSOLARPOWER.COM

PROJECT: 401 KING ST
MUNICIPALITY: BEAUFORT, SC
ZIP CODE: 29902
CLIENT: SARAH H POST
6.400 kW DC-STC/7.600 kW-AC 2

AUTHOR: EE
DATE: 28/JUN/22
REV: C

N2 - REVISION TABLE 3

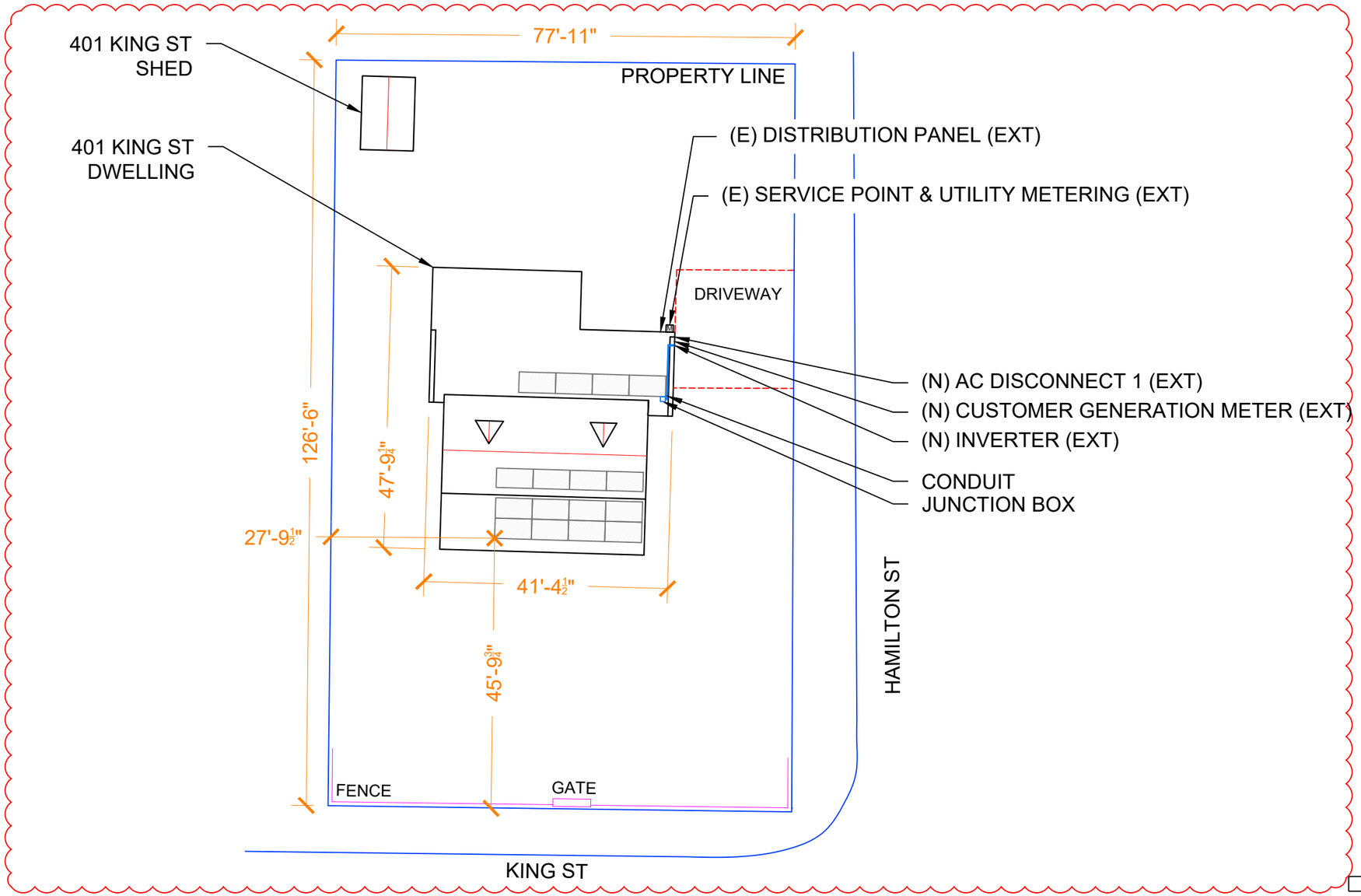

NOTES:

- SCALE AS SHOWN
- ALL DIMENSIONS IN FEET UNLESS OTHERWISE STATED

SAFETY PLAN:

- INSTALLERS SHALL DRAW IN DESIGNATED SAFETY AREA AROUND HOME
- INSTALLERS SHALL UPDATE NAME, ADDRESS, AND PHONE NUMBER OF NEAREST URGENT CARE FACILITY RELATIVE TO THE SITE BEFORE STARTING WORK

NEAREST URGENT CARE FACILITY
NAME:
ADDRESS:
PHONE NUMBER:

SOUTH CAROLINA LICENSED PROFESSIONAL ENGINEER
No. 33919
DAVID C. HERNANDEZ
Exp. 06/30/22
06/28/22

TITAN SOLAR POWER

TITAN SOLAR
PHONE: 1-855-SAY-SOLAR
WWW.TITANSOLARPOWER.COM

PROJECT: 401 KING ST
MUNICIPALITY: BEAUFORT, SC
ZIP CODE: 29902
CLIENT: SARAH H POST
6.400 kW DC-STC/7.600 kW-AC

AUTHOR: EE
DATE: 28/JUN/22
REV: C

S1 - SITE PLAN

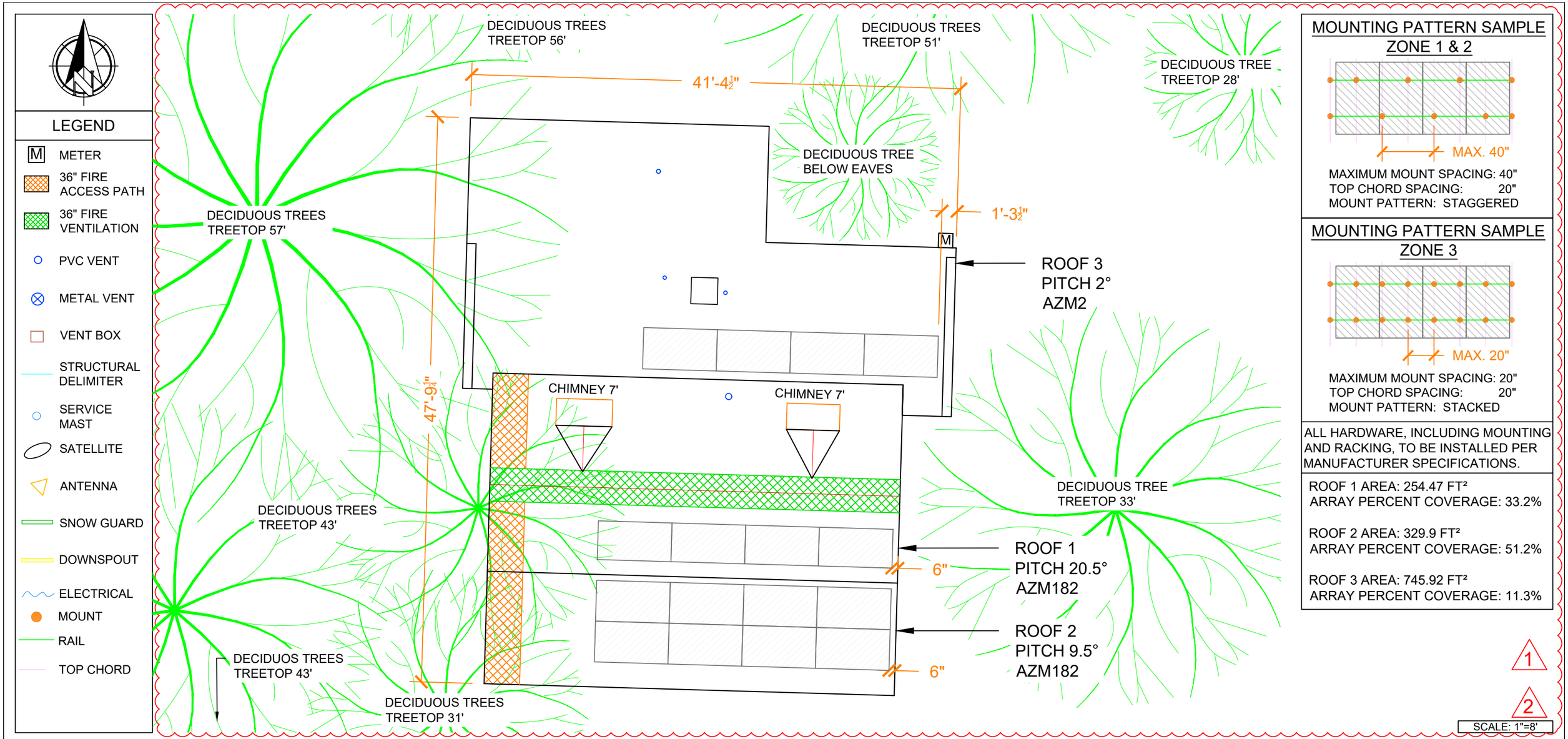

MOUNTING PATTERN SAMPLE ZONE 1 & 2

MAXIMUM MOUNT SPACING: 40"
TOP CHORD SPACING: 20"
MOUNT PATTERN: STAGGERED

MOUNTING PATTERN SAMPLE ZONE 3

MAXIMUM MOUNT SPACING: 20"
TOP CHORD SPACING: 20"
MOUNT PATTERN: STACKED

ALL HARDWARE, INCLUDING MOUNTING AND RACKING, TO BE INSTALLED PER MANUFACTURER SPECIFICATIONS.

ROOF 1 AREA: 254.47 FT²
ARRAY PERCENT COVERAGE: 33.2%

ROOF 2 AREA: 329.9 FT²
ARRAY PERCENT COVERAGE: 51.2%

ROOF 3 AREA: 745.92 FT²
ARRAY PERCENT COVERAGE: 11.3%

ROOF PITCH: 9.5°, 20.5° SLOPED SHINGLE ROOF
AZIMUTHS: 182°
RACKING TYPE: EVEREST CROSSRAIL 44-X
MOUNT TYPE: K2 SPLICE FOOT X
1

ROOF PITCH: 2° FLAT ROLLED COMP ROOF
AZIMUTHS: 2°
RACKING TYPE: EVEREST CROSSRAIL 44-X
MOUNT TYPE: E-CURB MOUNTS
1

PANEL TYPE: Q.PEAK DUO BLK ML-G10+ 400W
PANEL SIZE: 74" X 41.1"
NUMBER OF PANELS: 16
SYSTEM SIZE: 6.400 kW
2

NOTES:
- SOLAR PANEL LAYOUT SUBJECT TO CHANGE ACCORDING TO EXISTING CONDITIONS
- SCALE AS SHOWN
- ALL DIMENSIONS IN FEET UNLESS OTHERWISE STATED

SOUTH CAROLINA LICENSED PROFESSIONAL ENGINEER No. 33919 DAVID C. HERNANDEZ
Exp. 06/30/22
06/28/22

TITAN SOLAR POWER

TITAN SOLAR
PHONE: 1-855-SAY-SOLAR
WWW.TITANSOLARPOWER.COM

PROJECT: 401 KING ST
MUNICIPALITY: BEAUFORT, SC
ZIP CODE: 29902
CLIENT: SARAH H POST
6.400 kW DC-STC/7.600 kW-AC
2

AUTHOR: EE
DATE: 28/JUN/22
REV: C

S2 - PANEL LAYOUT

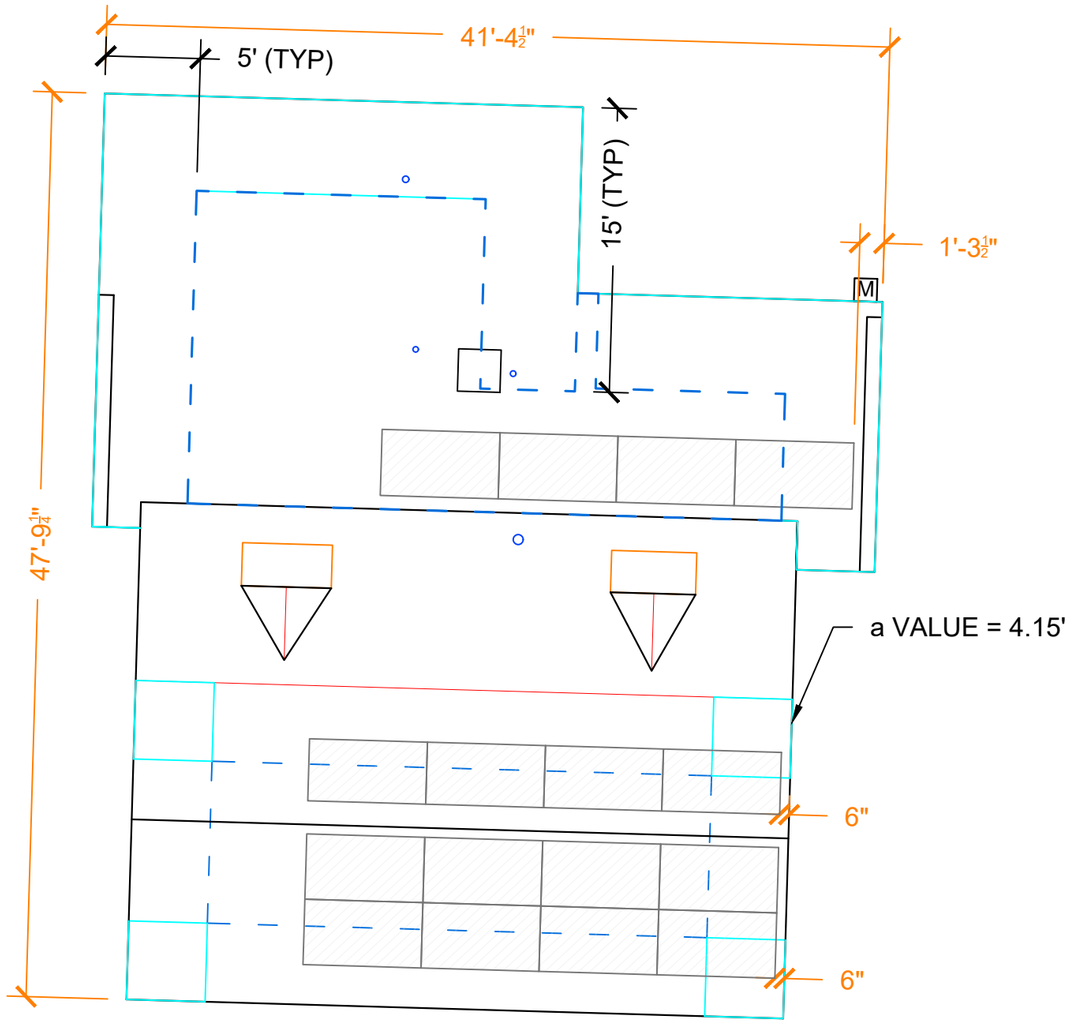

LEGEND

- M — METER
- WINDZONE 2
- WINDZONE 3
- PVC VENT
- METAL VENT
- VENT BOX
- STRUCTURAL DELIMITER
- SERVICE MAST
- SATELLITE
- ANTENNA
- SNOW GUARD
- DOWNSPOUT
- ELECTRICAL
- MOUNT
- RAIL
- TOP CHORD

MOUNTING PATTERN SAMPLE ZONE 1 & 2

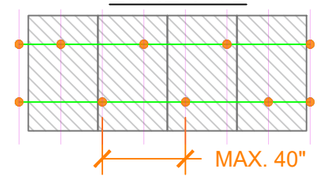

MAXIMUM MOUNT SPACING: 40"
TOP CHORD SPACING: 20"
MOUNT PATTERN: STAGGERED

MOUNTING PATTERN SAMPLE ZONE 3

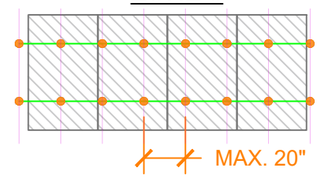

MAXIMUM MOUNT SPACING: 20"
TOP CHORD SPACING: 20"
MOUNT PATTERN: STACKED

ALL HARDWARE, INCLUDING MOUNTING AND RACKING, TO BE INSTALLED PER MANUFACTURER SPECIFICATIONS.

ROOF 1 AREA: 254.47 FT²
ARRAY PERCENT COVERAGE: 33.2%

ROOF 2 AREA: 329.9 FT²
ARRAY PERCENT COVERAGE: 51.2%

ROOF 3 AREA: 745.92 FT²
ARRAY PERCENT COVERAGE: 11.3%

1
2

SCALE: 1"=8'

ROOF PITCH: 9.5°, 20.5° SLOPED SHINGLE ROOF
AZIMUTHS: 182°
RACKING TYPE: EVEREST CROSSRAIL 44-X
MOUNT TYPE: K2 SPLICE FOOT X

ROOF PITCH: 2° FLAT ROLLED COMP ROOF
AZIMUTHS: 2°
RACKING TYPE: EVEREST CROSSRAIL 44-X
MOUNT TYPE: E-CURB MOUNTS
1

PANEL TYPE: Q.PEAK DUO BLK ML-G10+ 400W
PANEL SIZE: 74" X 41.1"
NUMBER OF PANELS: 16
SYSTEM SIZE: 6.400 kW
2

NOTES:
- SOLAR PANEL LAYOUT SUBJECT TO CHANGE ACCORDING TO EXISTING CONDITIONS
- SCALE AS SHOWN
- ALL DIMENSIONS IN FEET UNLESS OTHERWISE STATED

SOUTH CAROLINA LICENSED PROFESSIONAL ENGINEER
No. 33919
DAVID C. HERNANDEZ
Exp. 06/30/22
06/28/22

TITAN SOLAR POWER

TITAN SOLAR
PHONE: 1-855-SAY-SOLAR
WWW.TITANSOLARPOWER.COM

PROJECT: 401 KING ST
MUNICIPALITY: BEAUFORT, SC
ZIP CODE: 29902
CLIENT: SARAH H POST
6.400 kW DC-STC/7.600 kW-AC
2

AUTHOR: EE
DATE: 28/JUN/22
REV: C

S3 - WINDZONES

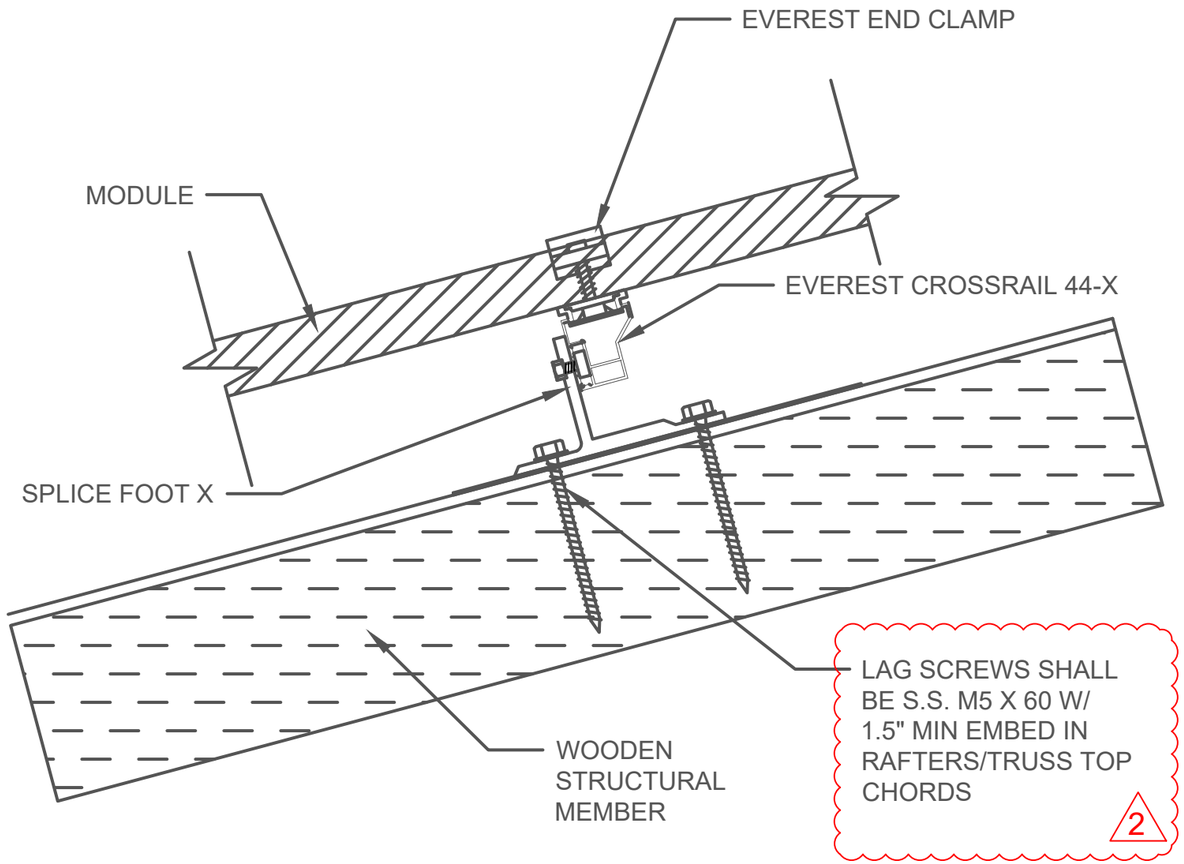

SCALE: NTS

PANEL TYPE: Q.PEAK DUO BLK ML-G10+ 400W
PANEL SIZE: 74" X 41.1"
RACKING TYPE: EVEREST CROSSRAIL 44-X
MOUNT TYPE: K2 SPLICE FOOT X
2

NOTES:
- SCALE AS SHOWN
- DIMENSIONS IN FEET UNLESS OTHERWISE STATED

SOUTH CAROLINA LICENSED PROFESSIONAL ENGINEER
No. 33919
DAVID C. HERNANDEZ
Exp. 06/30/22
06/28/22

TITAN SOLAR POWER

TITAN SOLAR
PHONE: 1-855-SAY-SOLAR
WWW.TITANSOLARPOWER.COM

PROJECT: 401 KING ST
MUNICIPALITY: BEAUFORT, SC
ZIP CODE: 29902
CLIENT: SARAH H POST
6.400 kW DC-STC/7.600 kW-AC
2

AUTHOR: EE
DATE: 28/JUN/22
REV: C

S4 - STRUCTURAL DETAIL 1

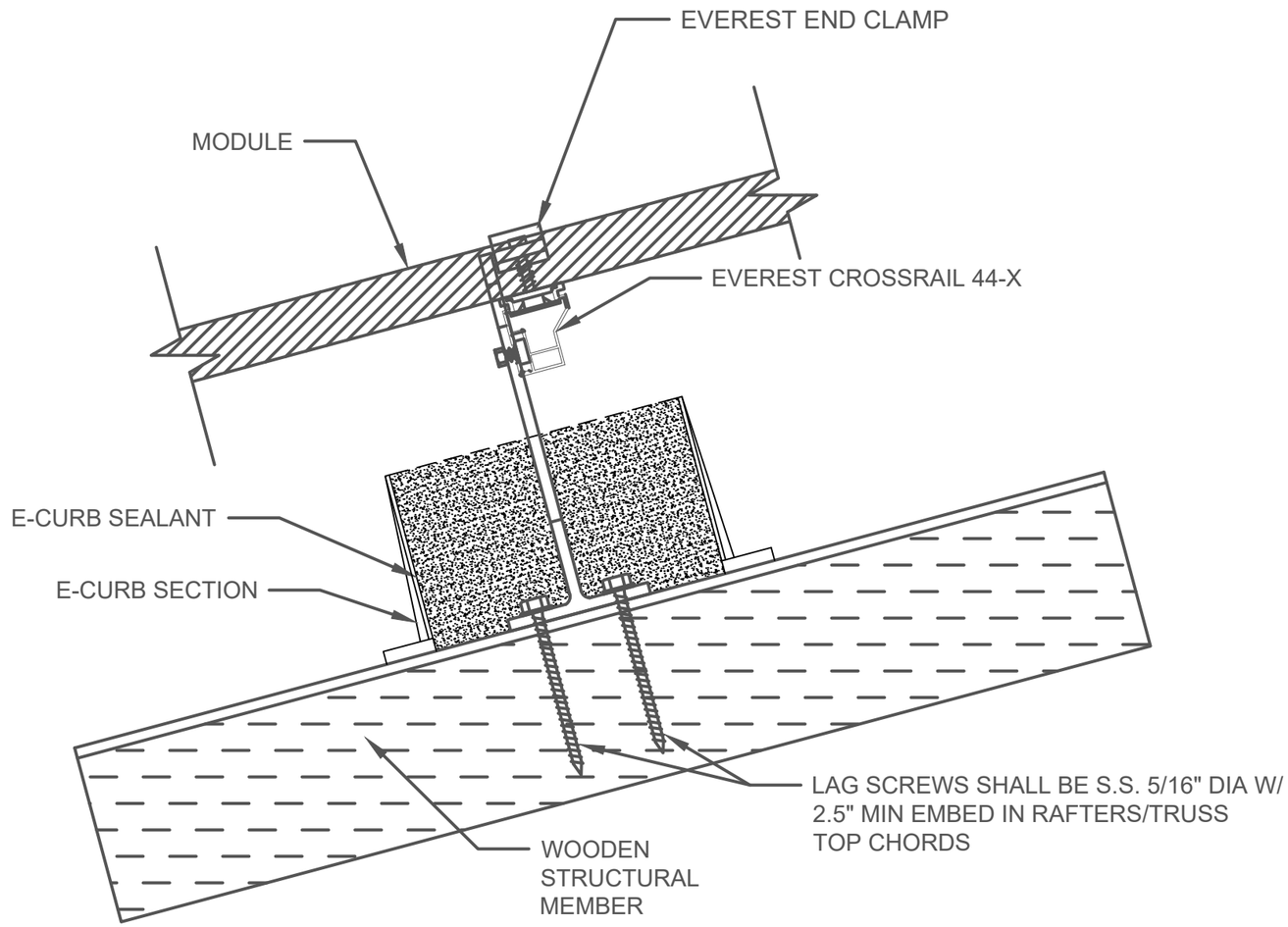

SCALE: NTS

PANEL TYPE: Q.PEAK DUO BLK ML-G10+ 400W

PANEL SIZE: 74" X 41.1"

RACKING TYPE: EVEREST CROSSRAIL 44-X

MOUNT TYPE: K2 SPLICE FOOT X

2

NOTES:

- SCALE AS SHOWN
- DIMENSIONS IN FEET UNLESS OTHERWISE STATED

SOUTH CAROLINA LICENSED PROFESSIONAL ENGINEER
No. 33919
DAVID C. HERNANDEZ
Exp. 06/30/22
06/28/22

TITAN SOLAR POWER

TITAN SOLAR
PHONE: 1-855-SAY-SOLAR
WWW.TITANSOLARPOWER.COM

PROJECT: 401 KING ST
MUNICIPALITY: BEAUFORT, SC
ZIP CODE: 29902
CLIENT: SARAH H POST
6.400 kW DC-STC/7.600 kW-AC

2

AUTHOR: EE
DATE: 28/JUN/22
REV: C

S5 - STRUCTURAL DETAIL 2

HOUSE ELEVATION

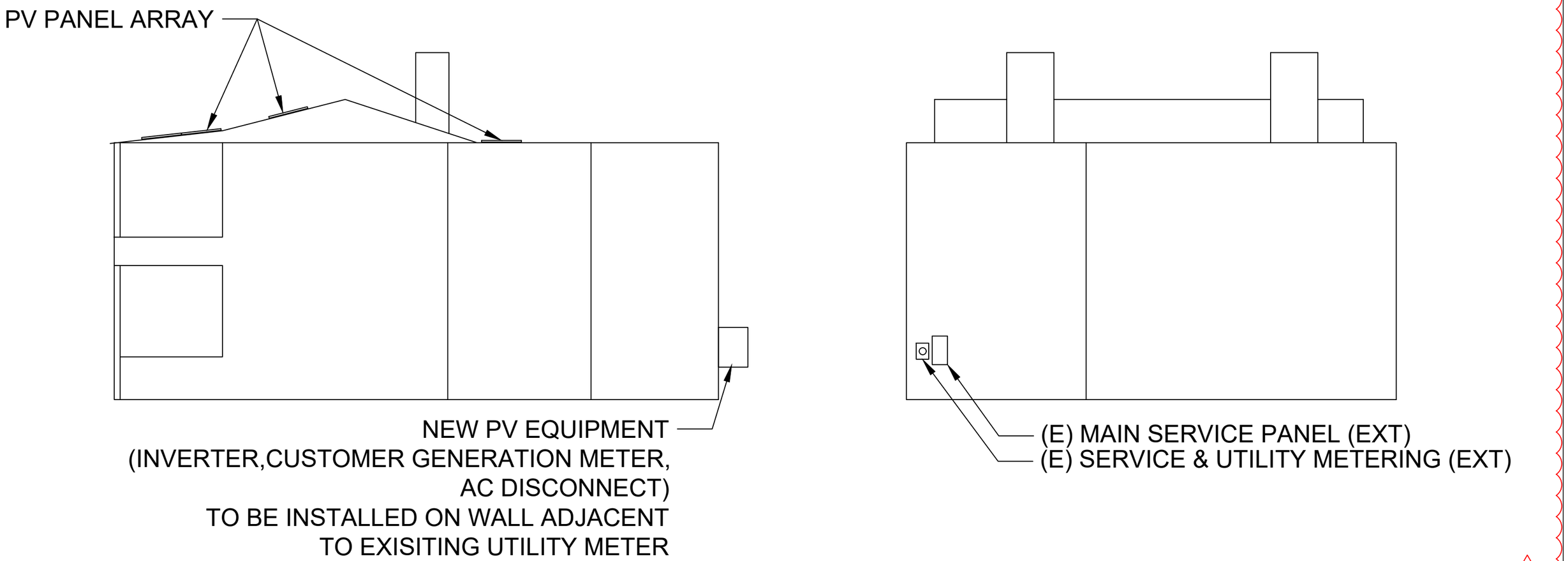

3

TITAN SOLAR POWER

TITAN SOLAR
PHONE: 1-855-SAY-SOLAR
WWW.TITANSOLARPOWER.COM

PROJECT: 401 KING ST
MUNICIPALITY: BEAUFORT, SC
ZIP CODE: 29902
CLIENT: SARAH H POST
6.400 kW DC-STC/7.600 kW-AC

2

AUTHOR: EE
DATE: 28/JUN/22
REV: C

S6 - ELEVATION PLAN

SOUTH CAROLINA LICENSED PROFESSIONAL ENGINEER
No. 33919
DAVID C. HERNANDEZ
Exp. 06/30/22
06/28/22

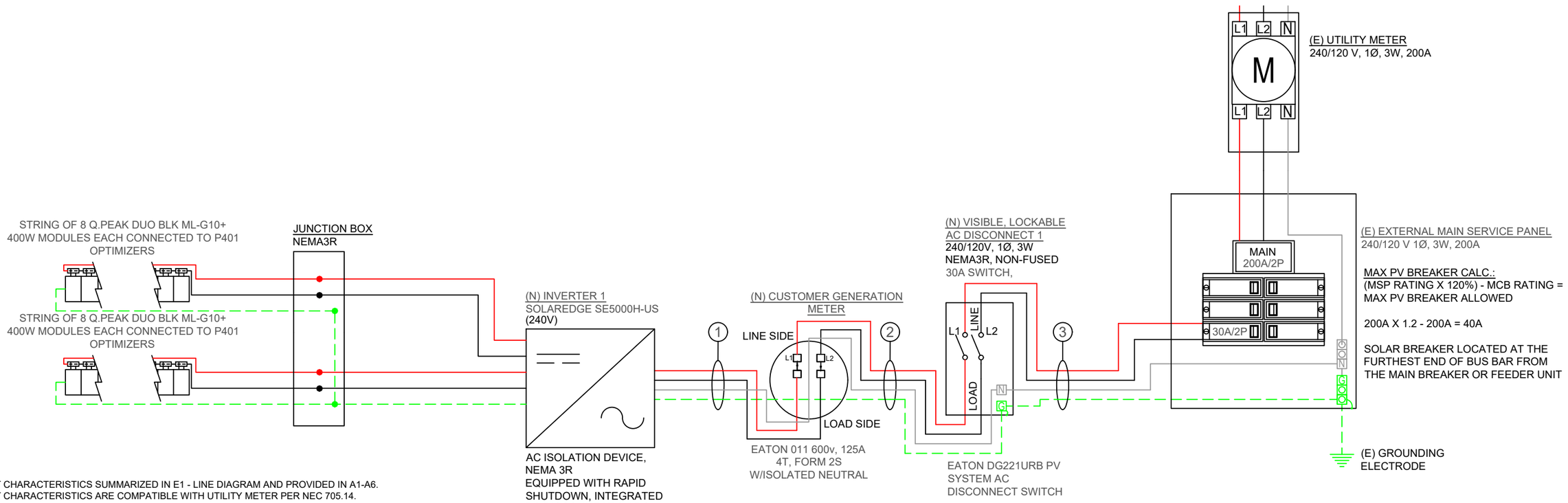

NOTE:
OUTPUT CHARACTERISTICS SUMMARIZED IN E1 - LINE DIAGRAM AND PROVIDED IN A1-A6.
OUTPUT CHARACTERISTICS ARE COMPATIBLE WITH UTILITY METER PER NEC 705.14.

INTERACTIVE GRID TIE SYSTEM

AC CONDUCTOR SCHEDULE

ID	From	To	Phase	AC Voltage	Circuit Current	80% or 100% Rated OCPD?	Min OCPD	OCPD (If Present)	Material	Conductor Type	# of CCCs	Fill Factor	Ambient Temp.	Temp. Factor	Conductor Size	Ampacity @ 75°C	Max Ampacity	Derated Ampacity	# of Neutrals	Neutral Size	Ground	Ground Material	Ground Type	Ground Size	Conduit Type	Conduit Size
1	SolarEdge Inverter 1	PV Meter	1Φ	240 (V)	21.0 (A)	80%	26.3 (A)	30 (A)	CU	THWN-2	2	1.00	32.6 (°C)	0.96	8 AWG	50 (A)	55 (A)	52.8 (A)	1	8 AWG	EGC	CU	THWN-2	10 AWG	EMT	0.75 (in.)
2	PV Meter	AC Disconnect 1	1Φ	240 (V)	21.0 (A)	80%	26.3 (A)	30 (A)	CU	THWN-2	2	1.00	32.6 (°C)	0.96	8 AWG	50 (A)	55 (A)	52.8 (A)	1	8 AWG	EGC	CU	THWN-2	10 AWG	EMT	0.75 (in.)
3	AC Disconnect 1	POI	1Φ	240 (V)	21.0 (A)	80%	26.3 (A)	30 (A)	CU	THWN-2	2	1.00	32.6 (°C)	0.96	8 AWG	50 (A)	55 (A)	52.8 (A)	1	8 AWG	EGC	CU	THWN-2	10 AWG	EMT	0.75 (in.)

SOLAREDGE DC CONDUCTOR SCHEDULE

(A) FREE AIR
*TEMPERATURE FACTOR IS BASED ON 2% DRY BULB HIGH TEMPERATURE OF 32.6°C WITH A 0°C TEMPERATURE ADDER THEREFORE RACEWAYS MUST BE AT LEAST 0.875 INCHES ABOVE ROOF AS PER NEC 310.15(B)(3)(C)

Number of Strings	Conductor Material	Conductor Type	Conductor Size	Base Ampacity @ 90°C	*Temperature Factor	Fill Factor	Derated Ampacity	Circuit Current	Min. OCPD (If Required)	EGC Material	EGC Type	EGC Size	Conduit
No Limit	CU	PV Wire	10 AWG	40A	0.96	1.00	38.40A	15.00A	20A	CU	BARE	6 AWG	N/A - Free Air

(B) IN CONDUIT
*TEMPERATURE FACTOR IS BASED ON 2% DRY BULB HIGH TEMPERATURE OF 32.6°C WITH A 0°C TEMPERATURE ADDER THEREFORE RACEWAYS MUST BE AT LEAST 0.875 INCHES ABOVE ROOF AS PER NEC 310.15(B)(3)(C)
**CALCULATIONS ARE BASED ON THE LARGEST CIRCUIT CURRENT (WORST CASE SCENARIO).
***TABLE ASSUMES ONE EGC PER CONDUIT. MINIMUM ONE EGC IS REQUIRED PER INVERTER PER CONDUIT.

Number of Strings	Conductor Material	Conductor Type	Conductor Size	Base Ampacity @ 90°C	*Temperature Factor	Fill Factor	Derated Ampacity	**Circuit Current	Min. OCPD (If Required)	EGC Material	EGC Type	EGC Size	Min. EMT Size
1	CU	THWN-2	10 AWG	40A	0.96	1.00	38.40A	15.00A	20A	CU	THWN-2	10 AWG	0.50 in.
2	CU	THWN-2	10 AWG	40A	0.96	0.80	30.72A	15.00A	20A	CU	THWN-2	10 AWG	0.50 in.

TITAN SOLAR POWER

TITAN SOLAR
PHONE: 1-855-SAY-SOLAR
WWW.TITANSOLARPOWER.COM

PROJECT: 401 KING ST
MUNICIPALITY: BEAUFORT, SC
ZIP CODE: 29902
CLIENT: SARAH H POST
6.400 kW DC-STC/7.600 kW-AC

AUTHOR: EE
DATE: 28/JUN/22
REV: C

E1 - LINE DIAGRAM

SOUTH CAROLINA LICENSED PROFESSIONAL ENGINEER
No. 33919
DAVID C. HERNANDEZ
Exp. 06/30/22
06/28/22

WARNING

ELECTRIC SHOCK HAZARD

TERMINALS ON BOTH THE LINE AND LOAD SIDES MAY BE
ENERGIZED IN THE OPEN POSITION

CODE REF: [NEC 690.13(B)]
LOCATION: PLACE ON **ALL** DISCONNECTING MEANS WHERE ENERGIZED IN AN OPEN POSITION

WARNING

TURN OFF PHOTOVOLTAIC AC DISCONNECT PRIOR TO WORKING INSIDE PANEL

CODE REF: [NEC 110.27(C) & OSHA 1910.14(f)7)]
LOCATION: PLACE ON **ALL** COMBINER BOX/ENCLOSURES, MAIN SERVICE DISCONNECT, BREAKER PANEL & PULL BOXES

WARNING

THIS EQUIPMENT FED BY MULTIPLE SOURCES

TOTAL RATING OF ALL OVERCURRENT DEVICES EXCLUDING MAIN POWER SUPPLY SHALL NOT EXCEED AMPACITY OF BUSBAR

CODE REF: [NEC 705.12(B)(2)(3)(c)]
LOCATION: PLACE THIS LABEL AT P.O.C. TO SERVICE DISTRIBUTION EQUIPMENT
(I.E. MAIN PANEL OR SUB-PANEL) IF APPLICABLE

WARNING

THE DISCONNECTION OF THE GROUNDED CONDUCTOR(S) MAY RESULT IN OVERVOLTAGE ON THE EQUIPMENT

CODE REF: [NEC 690.31(I)]
LOCATION: PLACE ON **ALL** DISCONNECTING MEANS WHERE ENERGIZED IN AN OPEN POSITION

WARNING

DUAL POWER SOURCE

SECOND SOURCE IS PHOTOVOLTAIC SYSTEM

CODE REF: [NEC 705.12(B)(3) & 690.59]
LOCATION: PLACE LABEL ON ALL EQUIPMENT CONTAINING OVERCURRENT DEVICES IN CIRCUITS SUPPLYING POWER TO A BUSBAR OR CONDUCTORS SUPPLIED FROM MULTIPLE SOURCES

WARNING

POWER SOURCE OUTPUT CONNECTION

DO NOT RELOCATE THIS OVERCURRENT DEVICE

CODE REF: [NEC 705.12(B)(2)(3)(b)]
LOCATION: PLACE LABEL ON ALL EQUIPMENT CONTAINING OVERCURRENT DEVICES IN CIRCUITS SUPPLYING POWER TO A BUSBAR OR CONDUCTORS SUPPLIED FROM MULTIPLE SOURCES

CAUTION

PHOTOVOLTAIC SYSTEM CIRCUIT IS BACKFED

CODE REF: [NEC 705.12(B)(4) & 690.59]
LOCATION: PLACE LABEL ON ALL EQUIPMENT CONTAINING OVERCURRENT DEVICES IN CIRCUITS SUPPLYING POWER TO A BUSBAR OR CONDUCTORS SUPPLIED FROM MULTIPLE SOURCES

RAPID SHUTDOWN SWITCH FOR SOLAR PV SYSTEM

CODE REF: [NEC 690.56(C)(3)]
LOCATION: PLACE NO MORE THAN 1m (3FT) FROM SWITCH

SOLAR PV SYSTEM EQUIPPED WITH RAPID SHUTDOWN

TURN RAPID SHUTDOWN SWITCH TO THE "OFF" POSITION TO SHUT DOWN PV SYSTEM AND REDUCE SHOCK HAZARD IN THE ARRAY.

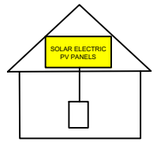

CODE REF: [NEC 690.56(C)]
LOCATION: PLACE AT MAIN SERVICE PANEL

WARNING: PHOTOVOLTAIC POWER SOURCE

CODE REF: [NEC 690.31 (G)(3) & 690.31 (G)(4)]
LOCATION: PLACE ON ALL JUNCTION BOXES. EXPOSED RACEWAYS EVERY 10'

MAXIMUM VOLTAGE	480 V
MAXIMUM CIRCUIT CURRENT	30 A
MAX RATED OUTPUT CURRENT OF DC-TO-DC CONVERTER (IF INSTALLED)	15 A

CODE REF: [NEC 690.53]
LOCATION: PLACE AT INVERTER 1

DO NOT DISCONNECT UNDER LOAD

CODE REF: [NEC 690.15(C) & 690.33(E)(2)]
LOCATION: PLACE ON **ALL** DISCONNECTING MEANS WHERE ENERGIZED IN AN OPEN POSITION

PHOTOVOLTAIC AC DISCONNECT

RATED AC OUTPUT CURRENT	21.0A
NOMINAL OPERATING AC VOLTAGE	240V

CODE REF: [NEC 690.54]
LOCATION: PLACE AT P.O.C. TO SERVICE DISTRIBUTION EQUIPMENT / AC DISCONNECT / PULL BOXES

2

PHOTOVOLTAIC AC DISCONNECT

CODE REF: [NEC 690.13(B)]
LOCATION: PLACE AT P.O.C. TO SERVICE DISTRIBUTION EQUIPMENT / AC DISCONNECT / PULL BOXES

PHOTOVOLTAIC DC DISCONNECT

CODE REF: [NEC 690.13(B)]
LOCATION: PLACE ON DC DISCONNECT/COMBINER BOX

NOTES:

1) ALL LABELING USED OUTDOORS MUST BE ENGRAVED METAL, UV STABILIZED ENGRAVED PLASTIC OR OF A MATERIAL SUFFICIENTLY DURABLE TO WITHSTAND THE ENVIRONMENT INVOLVED. VALUES HAND WRITTEN OR IN WRITTEN IN MARKER ARE NOT ACCEPTABLE PER NEC 2017.
2) LABELS USED INDOORS MAY BE MADE OF DURABLE VINYL OR PAPER
3) DO NOT COVER ANY EXISTING MANUFACTURER APPLIED LABELS WITH INSTALLATION SPECIFIC LABELS
4) LABEL COLORS CHOSEN PER NFPA 70 2017 DIRECTION THAT ANSI Z535-2011 BE USED
5) REQUIREMENTS COMPLY WITH NEC 2017
6) ADDITIONALLY, IT IS HIGHLY RECOMMENDED THAT THE INSTALLER ATTACH A LABEL WITH THE COMPANY NAME AND CONTACT INFORMATION AT THE INVERTER
7) ALL WARNING SIGNS OR LABELS SHALL COMPLY WITH NEC 110.21(B)

FORMAT

1. WHITE LETTERING ON A RED BACKGROUND
2. MINIMUM 3/8 INCHES LETTER HEIGHT
3. ALL LETTERS SHALL BE CAPITALIZED
4. ARIAL OR SIMILAR FONT (NON-BOLD)

MATERIAL

REFLECTIVE, WEATHER RESISTANT MATERIAL SUITABLE FOR THE ENVIRONMENT (USE UL-969 AS STANDARD FOR WEATHER RATING). DURABLE ADHESIVE MATERIALS

TITAN SOLAR POWER

TITAN SOLAR
PHONE: 1-855-SAY-SOLAR
WWW.TITANSOLARPOWER.COM

PROJECT: 401 KING ST
MUNICIPALITY: BEAUFORT, SC
ZIP CODE: 29902
CLIENT: SARAH H POST
6.400 kW DC-STC/7.600 kW-AC

2

AUTHOR: EE
DATE: 28/JUN/22
REV: C

E2 - WARNING LABELS

SOUTH CAROLINA LICENSED PROFESSIONAL ENGINEER
No. 33919
DAVID C. HERNANDEZ
Exp. 06/30/22
06/28/22

CAUTION:

MULTIPLE SOURCES OF POWER

POWER TO THIS SERVICE IS ALSO SUPPLIED FROM THE
FOLLOWING SOURCES WITH DISCONNECTS LOCATED AS SHOWN

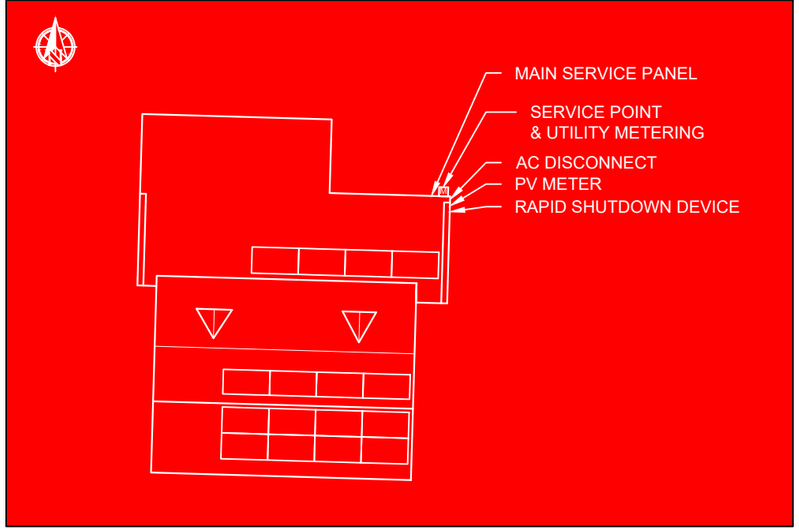

[NEC 705.10] CUSTOMER SERVICE PANEL, PV/AC DISCONNECT AND RAPID SHUTDOWN DEVICE

2

TITAN SOLAR POWER

TITAN SOLAR
PHONE: 1-855-SAY-SOLAR
WWW.TITANSOLARPOWER.COM

PROJECT: 401 KING ST
MUNICIPALITY: BEAUFORT, SC
ZIP CODE: 29902
CLIENT: SARAH H POST
6.400 kW DC-STC/7.600 kW-AC

2

AUTHOR: EE
DATE: 28/JUN/22
REV: C

E3 - PLACARD

SOUTH CAROLINA LICENSED PROFESSIONAL ENGINEER
No. 33919
DAVID C. HERNANDEZ
Exp. 06/30/22
06/28/22

TITAN SOLAR PANEL

25 YR Warranty Product & Performance

EUPD RESEARCH TOP BRAND PV EUROPE 2021

Q CELLS Yield Security



BREAKING THE 20% EFFICIENCY BARRIER

Q.ANTUM DUO Z Technology with zero gap cell layout boosts module efficiency up to 20.9 %.

INDUSTRY'S MOST THOROUGH TESTING

Q CELLS is the first solar module manufacturer to pass the most comprehensive quality programme in the industry:
The new "Quality Controlled PV" of the independent certification institute TÜV Rheinland.

ENDURING HIGH PERFORMANCE

Long-term yield security with Anti LID Technology, Anti PID Technology1, Hot-Spot Protect and Traceable Quality Tra.Q™.

EXTREME WEATHER RATING

High-tech aluminum alloy frame, certified for high snow (5400 Pa) and wind loads (4000 Pa).

A RELIABLE INVESTMENT

Inclusive 25-year product warranty and 25-year linear performance warranty2.

INNOVATIVE ALL-WEATHER TECHNOLOGY

Optimal yields, whatever the weather with excellent low-light and temperature behavior.

1 APT test conditions according to IEC / TS 62804-1:2015, method A (−1500 V, 96 h)
2 See data sheet on rear for further information.

Q CELLS

Q PEAK DUO BLK ML-G10+

395-400 ENDURING HIGH PERFORMANCE

THE IDEAL SOLUTION FOR:
Rooftop arrays on residential buildings

MECHANICAL SPECIFICATION

FORMAT	74.0 in × 41.1 in × 1.26 in (including frame) (1879 mm × 1045 mm × 32 mm)
WEIGHT	48.5 lbs (22.0 kg)
FRONT COVER	0.13 in (3.2 mm) thermally pre-stressed glass with anti-reflection technology
BACK COVER	Composite film
FRAME	Black anodized aluminum
CELL	6 × 22 monocrystalline Q.ANTUM solar half cells
JUNCTION BOX	2.09-3.98 in × 1.26-2.36 in × 0.59-0.71 in (53-101 mm × 32-60 mm × 15-18 mm), IP67, with bypass diodes
CABLE	4 mm² Solar cable; (+) ≥ 49.2 in (1250 mm), (−) ≥ 49.2 in (1250 mm)
CONNECTOR	Stäubli MC4; IP68

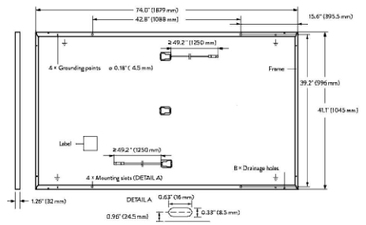

ELECTRICAL CHARACTERISTICS

POWER CLASS				385	390	395	400	405
MINIMUM PERFORMANCE AT STANDARD TEST CONDITIONS, STC			[1] (POWER TOLERANCE +5 W / −0 W)					
MINIMUM	POWER AT MPP	P_{MPP}	[W]	385	390	395	400	405
MINIMUM	SHORT CIRCUIT CURRENT	I_{SC}	[A]	11.04	11.07	11.10	11.14	11.17
MINIMUM	OPEN CIRCUIT VOLTAGE	V_{OC}	[V]	45.19	45.23	45.27	45.30	45.34
MINIMUM	CURRENT AT MPP	I_{MPP}	[A]	10.59	10.65	10.71	10.77	10.83
MINIMUM	VOLTAGE AT MPP	V_{MPP}	[V]	36.36	36.62	36.88	37.13	37.39
MINIMUM	**EFFICIENCY**	η	[%]	≥19.6	≥19.9	≥20.1	≥20.4	≥20.6
MINIMUM PERFORMANCE AT NORMAL OPERATING CONDITIONS, NMOT			[2]					
MINIMUM	POWER AT MPP	P_{MPP}	[W]	288.8	292.6	296.3	300.1	303.8
MINIMUM	SHORT CIRCUIT CURRENT	I_{SC}	[A]	8.90	8.92	8.95	8.97	9.00
MINIMUM	OPEN CIRCUIT VOLTAGE	V_{OC}	[V]	42.62	42.65	42.69	42.72	42.76
MINIMUM	CURRENT AT MPP	I_{MPP}	[A]	8.35	8.41	8.46	8.51	8.57
MINIMUM	VOLTAGE AT MPP	V_{MPP}	[V]	34.59	34.81	35.03	35.25	35.46

[1] Measurement tolerances P_{MPP} ±3%; I_{SC}; V_{OC} ±5% at STC: 1000 W/m², 25±2 °C, AM 1.5 according to IEC 60904-3 • [2] 800 W/m², NMOT, spectrum AM 1.5

Q CELLS PERFORMANCE WARRANTY

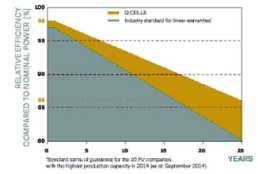

At least 98 % of nominal power during first year. Thereafter max. 0.5% degradation per year. At least 93.5% of nominal power up to 10 years. At least 86 % of nominal power up to 25 years.

All data within measurement tolerances Full warranties in accordance with the warranty terms of the Q CELLS sales organisation of your respective country.

PERFORMANCE AT LOW IRRADIANCE

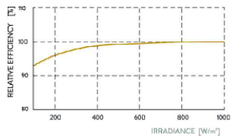

Typical module performance under low irradiance conditions in comparison to STC conditions (25 °C, 1000 W/m²)

TEMPERATURE COEFFICIENTS

TEMPERATURE COEFFICIENT OF I_{SC}	α	[%/K]	+0.04	TEMPERATURE COEFFICIENT OF V_{OC}	β	[%/K]	−0.27
TEMPERATURE COEFFICIENT OF P_{MPP}	γ	[%/K]	−0.34	NOMINAL MODULE OPERATING TEMPERATURE	NMOT	[°F]	109±5.4 (43±3°C)

PROPERTIES FOR SYSTEM DESIGN

Maximum System Voltage V_{SYS}	[V]	1000 (IEC) / 1000 (UL)	PV module classification	Class II
Maximum Series Fuse Rating	[A DC]	20	Fire Rating based on ANSI / UL 61730	TYPE 2
Max. Design Load, Push / Pull[3]	[lbs/ft²]	75 (3600 Pa) / 55 (2660 Pa)	Permitted Module Temperature on Continuous Duty	−40 °F up to +185 °F (−40 °C up to +85 °C)
Max. Test Load, Push / Pull[3]	[lbs/ft²]	113 (5400 Pa) / 84 (4000 Pa)		

[3] See Installation Manual

QUALIFICATIONS AND CERTIFICATES

UL 61730, CE-compliant,
Quality Controlled PV - TÜV Rheinland,
IEC 61215:2016, IEC 61730:2016,
U.S. Patent No. 9,893,215 (solar cells),
QCPV Certification ongoing.

PACKAGING INFORMATION

Horizontal packaging	76.4 in 1940 mm	43.3 in 1100 mm	48.0 in 1220 mm	1656 lbs 751 kg	24 pallets	24 pallets	32 modules

Note: Installation instructions must be followed. See the installation and operating manual or contact our technical service department for further information on approved installation and use of this product.

Q CELLS
400 Spectrum Center Drive, Suite 1400, Irvine, CA 92618, USA
TEL: +1 949 748 5996
EMAIL: sales@q-cells.com.

TITAN SOLAR PANEL
525 W Baseline Rd., Mesa, AZ, 85210
TEL: 855.SAY.SOLAR
EMAIL: info@titansolarpower.com

Specifications subject to technical changes © Q CELLS Q.PEAK DUO BLK ML-G10+_385-405_2021-05_Rev01_NA

2

SOUTH CAROLINA LICENSED PROFESSIONAL ENGINEER
No. 33919
DAVID C. HERNANDEZ
Exp. 06/30/22
06/28/22

CrossRail 44-X

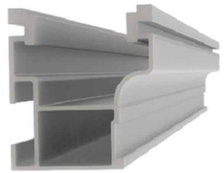

Mechanical Properties

	CrossRail 44-X
Material	6000 Series Aluminum
Ultimate Tensile Strength	37.7 ksi (260 MPa)
Yield Strength	34.8 ksi (240 MPa)
Weight	0.47 lbs/ft (0.699 kg/m)
Finish	Mill or Dark Anodized

Section Properties

	CrossRail 44-X
Sx	0.1490 in^3 (0.3785 cm^3)
Sy	0.1450 in^3 (0.3683 cm^3)
A (X-Section)	0.4050 in^2 (1.0287 cm^2)

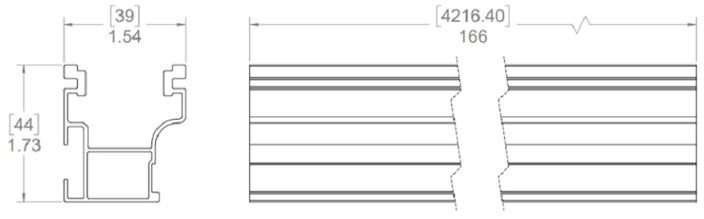

Dimensions in [mm] Inches

Notes:

- Structural values and span charts determined in accordance with Aluminum Design Manual and ASCE 7-16
- UL2703 Listed System for Fire and Bonding

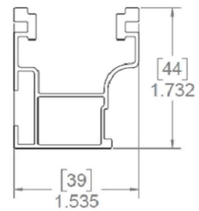

Technical data

	CrossRail System
Roof Type	Composition shingle, tile, standing seam
Material	High corrosion resistance stainless steel and high grade aluminum
Flexibility	Modular construction, suitable for any system size, height adjustable
PV Modules	For all common module types
Module Orientation	Portrait and landscape
Roof Attachment	Screw connection into rafter
Structural Validity	IBC compliant, stamped engineering letters available for all solar states
Warranty	25 years

www.everest-solarsystems.com

TITAN SOLAR POWER

TITAN SOLAR
PHONE: 1-855-SAY-SOLAR
WWW.TITANSOLARPOWER.COM

PROJECT: 401 KING ST
MUNICIPALITY: BEAUFORT, SC
ZIP CODE: 29902
CLIENT: SARAH H POST
6.400 kW DC-STC/7.600 kW-AC

2

AUTHOR: EE
DATE: 28/JUN/22
REV: C

A2 - RACKING SPECIFICATIONS

SOUTH CAROLINA LICENSED PROFESSIONAL ENGINEER
No. 33919
DAVID C. HERNANDEZ
Exp. 06/30/22
06/28/22

We support PV systems
Formerly Everest Solar Systems



Splice Foot X

Patent Pending

TECHNICAL SHEET

Item Number	Description	Part Number
1	Splice Foot X	4000113 | Splice Foot X Kit, Mill
2	K2 FlexFlash Butyl	
3	M5 x 60 lag screws	
4	T-Bolt & Hex Nut Set	

Technical Data

	Splice Foot X
Roof Type	Composition shingle
Material	Aluminum with stainless steel hardware
Finish	Mill
Roof Connection	M5 x 60 lag screws
Code Compliance	UL 2703
Compatibility	CrossRail 44-X, 48-X, 48-XL, 80

We support PV systems
Formerly Everest Solar Systems

Units: [in] mm

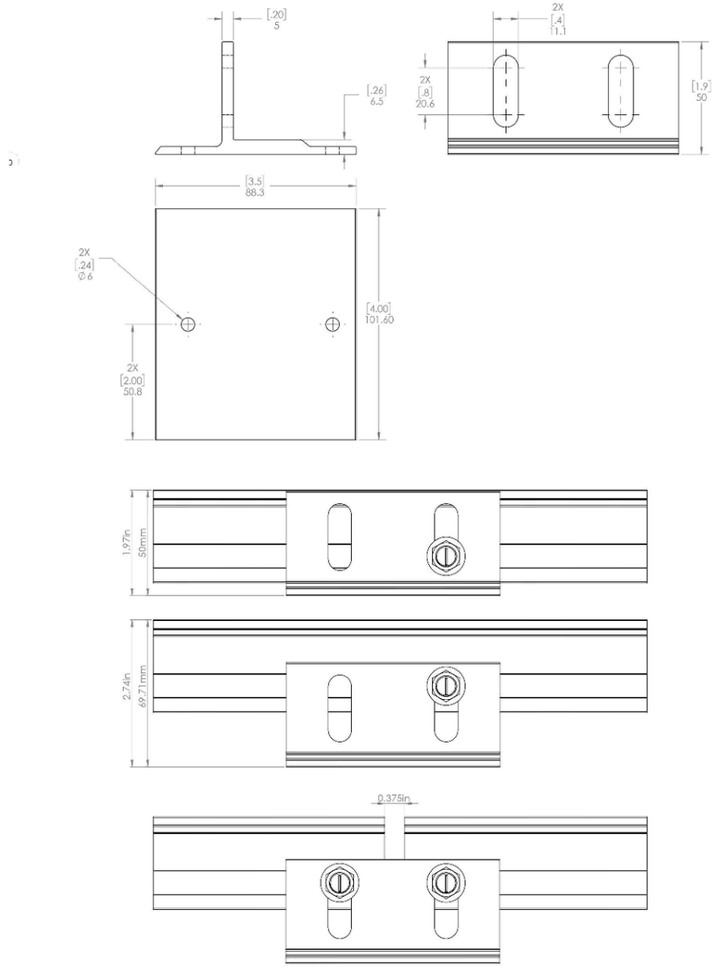

k2-systems.com

SOUTH CAROLINA LICENSED PROFESSIONAL ENGINEER
No. 33919
DAVID C. HERNANDEZ
Exp. 06/30/22
06/28/22

TITAN SOLAR POWER

TITAN SOLAR
PHONE: 1-855-SAY-SOLAR
WWW.TITANSOLARPOWER.COM

PROJECT: 401 KING ST
MUNICIPALITY: BEAUFORT, SC
ZIP CODE: 29902
CLIENT: SARAH H POST
6.400 kW DC-STC/7.600 kW-AC
2

AUTHOR: EE
DATE: 28/JUN/22
REV: C

A3 - MOUNTING SPECIFICATIONS 1

E-CURB™ SYSTEM
SOLAR PENETRATION SEALS

Technical Data Sheet | **Polyether Technology** | **CSI Section No. 07 12 13**

CHEM LINK
Construction & Maintenance
Telephone: 800-826-1681
Fax: 269-679-4448
353 E. Lyons Street
Schoolcraft, MI 49087
www.chemlink.com

Last Revision: 04/22/16
Document No. DS1350S

Product Description

E-Curb penetration seals replace old-style metal pitch pans with versatile, precast components and pourable sealants. CHEM LINK'S **E-Curb** system can usually be installed in under 15 minutes and never requires flashing or mechanical attachment.

E-Curbs are designed for use on granulated modified bitumen, asphalt and coal tar B.U.R. (built up roofing). **E-Curbs** are specified for PVC, EPDM, PIB, and TPO single ply roofing membranes. TPO Primer is required for use with TPO single-ply roof membrane.

When installed properly, this system forms a durable, waterproof rubber seal around penetrations. An extended manufacture warranty against leaks is activated with submittal of a completed warranty card.

Special Characteristics

- Rapid installation - "Slip-fit" light weight curb design reduces labor significantly.
- Excellent adhesion to most roofing materials.
- No flashing or mechanical attachment required.
- Service Temperature -40°F to 200°F (-40°C to 93°C)
- **1-Part**® accommodates movement and is suggested for use on all granulated membranes and details with excessive movement.
- For sloped roof applications, substitute **DuraLink 50**™ non-slump adhesive/sealant for **1-Part** and **M-1**®

Restrictions

- Please contact customer service for application guidelines with temperatures below 32°F (0°C).
- Do not apply if rain is anticipated within 4 hours.
- Do not use on Hypalon or smooth APP modified bitumen membrane. For smooth APP, torch down a target of granulated APP before installation.
- TPO Primer must be used for TPO applications.
- Do not prime bonding surfaces with asphalt primer.
- Do not use asphalt cement as a "night sealant". Use **M-1** for this purpose.
- **E-Curb** kits are designed to contain enough **1-Part** to fill each curb with displacement in consideration. Refer to our penetration calculator under contractor resources at chemlink.com to verify volumes.



E-Curb System Components

- **E-Curb** exterior rings, straights, and corners.
- **M-1** Structural Adhesive/Sealant used for bonding the **E-Curb** components, sealing and priming the penetration.
- **1-Part** "moisture cure" pourable sealer, used to form a durable, water-tight seal around the roof penetration.

E-Curb precast form components are composed of light weight nylon resin. The **E-Curb** is 2-inches high and is available in a variety of shapes and sizes.
Standard sizes include bisected circular pieces with inside diameters of 3, 4, 5, 6 or 9 inches; corner pieces with a 2-inch radius; straight pieces in 3-inch or 8-inch lengths; and a 4.5" x 3.4" rectangle. The outer surface is impervious to ice, corrosion, UV (ultraviolet) light and ponding water.

M-1 Structural Adhesive/Sealant is a durable, self-fixturing moisture cure mastic. Cartridges of **M-1** are supplied in each **E-Curb** Kit. Components are also sold separately.

1-Part is a highly flexible, self-leveling moisture cure pourable sealer that eliminates mixing. It is also 100% solid rubber, has a very low VOC content, will not melt or shrink, and is resistant to deterioration. It is supplied in 10.1-oz and 28-oz cartridges or 1/2 gallon pouches. Unused sealant can be capped and reused.

SMA INSTITUTE | AAMA American Architectural Manufacturers Association | NATIONAL ROOFING CONTRACTORS ASSOCIATION MEMBER | ISO 9001:2008

Step 1
Remove all previously applied caulk, mastic, cement, asphalt, and other contaminants from penetrations with a wire brush. Clean all smooth substrates with isopropyl or denatured alcohol. Brush away all gravel or loose granules. Seal the base of each penetration with **M-1**. Coat penetrations with **M-1** to 3" above the roof line.



Step 2
Hold a section of **E-Curb**, flat side up, and apply a 1/4" bead of **M-1** to the entire bottom perimeter. Apply 1 additional 1/4" bead of **M-1** down the center of the section. Do not tool the beads flat. Place the **E-Curb** section on the roof surface to form a half circle around the penetration(s). Press down firmly until **M-1** extrudes from the outside edges.



Step 3
Apply **M-1** to the second section of **E-Curb** as described above. Place the second section of curb on the roof surface to form a circle with the first section. Press firmly in place until excess adhesive extrudes from the outside edges. Apply a bead of **M-1** around the outside base of the installed **E-Curb**, and tool to form a smooth fillet. For non **E-Curb** penetrations seals, add **M-1** to scarf joint surfaces and tool smooth.



Step 4
Cut tip off **1-Part** cartridge at widest point on plastic nozzle and pierce the foil seal. Insert into caulking gun and pump **E-Curb** full. When using a **1-Part** pouch, remove cap, pour, squeeze out excess air, and reseal. **Note:** To provide an adequate rubber seal, maintain a 1" distance between penetrations and inside edge of the **E-Curb**.



All properties described in this document are derived from testing conducted in laboratory conditions. Properties and performance will vary depending on environmental conditions and application technique. Test and evaluate to determine appropriate usage. Visit www.chemlink.com for the Safety Data Sheet, Technical Data Guides and full warranty for this product.

LIMITED WARRANTY: ***CHEM LINK*** warrants this product's performance, provided it is properly stored and applied within 1 year. If this ***CHEM LINK*** material is proved to be defective, return remaining product and purchase receipt for refund or replacement of product exclusive of labor or cost of labor. This is the sole and exclusive remedy for defects or failure of this product. User must read and follow the direction of the current Technical Data Guide and SDS prior to product use. User determines suitability of product for intended use and assumes all risks. Manufacturer shall not be liable for damages (including consequential or incidental damages) in excess of the purchase price, except where such exclusion or limitation is prohibited by state law. THIS WARRANTY IS IN LIEU OF ALL OTHER WARRANTIES, WRITTEN OR ORAL, STATUTORY, EXPRESS OR IMPLIED INCLUDING ANY WARRANTY OF MERCHANTABILITY OR FITNESS FOR A PARTICULAR PURPOSE; except for the above express warranty given by manufacturer, the product is sold with all faults. ***CHEM LINK*** SHALL NOT BE RESPONSIBLE FOR THE USE OF THIS PRODUCT IN A MANNER TO INFRINGE ON ANY PATENT OR ANY OTHER INTELLECTUAL PROPERTY RIGHTS HELD BY OTHERS. This warranty gives you specific legal rights, and you may also have other rights in the U.S. which vary from state to state. For warranty claim information, call 800-826-1681.

CHEM LINK POLYMER INNOVATION

SOUTH CAROLINA LICENSED PROFESSIONAL ENGINEER
No. 33919
DAVID C. HERNANDEZ
Exp. 06/30/22
06/28/22

Single Phase Inverter with HD-Wave Technology

for North America

SE3000H-US / SE3800H-US / SE5000H-US / SE6000H-US / SE7600H-US / SE10000H-US / SE11400H-US

INVERTERS

12-25 YEAR WARRANTY



Optimized installation with HD-Wave technology

- Specifically designed to work with power optimizers
- Record-breaking 99% weighted efficiency
- Quick and easy inverter commissioning directly from a smartphone using the SolarEdge SetApp
- Fixed voltage inverter for longer strings
- Integrated arc fault protection and rapid shutdown for NEC 2014, NEC 2017 and NEC 2020 per article 690.11 and 690.12
- UL1741 SA certified, for CPUC Rule 21 grid compliance
- Small, lightweight, and easy to install both outdoors or indoors
- Built-in module-level monitoring
- Optional: Faster installations with built-in consumption metering (1% accuracy) and production revenue grade metering (0.5% accuracy, ANSI C12.20)

solaredge.com

solaredge

Single Phase Inverter with HD-Wave Technology

for North America

SE3000H-US / SE3800H-US / SE5000H-US / SE6000H-US/
SE7600H-US / SE10000H-US / SE11400H-US

MODEL NUMBER	SE3000H-US	SE3800H-US	SE5000H-US	SE6000H-US	SE7600H-US	SE10000H-US	SE11400H-US	
APPLICABLE TO INVERTERS WITH PART NUMBER	SExxxxH-xxxxxBxx4							
OUTPUT								
Rated AC Power Output	3000	3800 @ 240V 3300 @ 208V	5000	6000 @ 240V 5000 @ 208V	7600	10000	11400 @ 240V 10000 @ 208V	VA
Maximum AC Power Output	3000	3800 @ 240V 3300 @ 208V	5000	6000 @ 240V 5000 @ 208V	7600	10000	11400 @ 240V 10000 @ 208V	VA
AC Output Voltage Min.-Nom.-Max. (211 - 240 - 264)	✓	✓	✓	✓	✓	✓	✓	Vac
AC Output Voltage Min.-Nom.-Max. (183 - 208 - 229)	-	✓	-	✓	-	-	✓	Vac
AC Frequency (Nominal)	59.3 - 60 - 60.5[1]							Hz
Maximum Continuous Output Current @240V	12.5	16	21	25	32	42	47.5	A
Maximum Continuous Output Current @208V	-	16	-	24	-	-	48.5	A
Power Factor	1, Adjustable - 0.85 to 0.85							
GFDI Threshold	1							A
Utility Monitoring, Islanding Protection, Country Configurable Thresholds	Yes							
INPUT								
Maximum DC Power @240V	4650	5900	7750	9300	11800	15500	17650	W
Maximum DC Power @208V	-	5100	-	7750	-	-	15500	W
Transformer-less, Ungrounded	Yes							
Maximum Input Voltage	480							Vdc
Nominal DC Input Voltage	380				400			Vdc
Maximum Input Current @240V[2]	8.5	10.5	13.5	16.5	20	27	30.5	Adc
Maximum Input Current @208V[2]	-	9	-	13.5	-	-	27	Adc
Max. Input Short Circuit Current	45							Adc
Reverse-Polarity Protection	Yes							
Ground-Fault Isolation Detection	600kΩ Sensitivity							
Maximum Inverter Efficiency	99	99.2						%
CEC Weighted Efficiency	99						99 @ 240V 98.5 @ 208V	%
Nighttime Power Consumption	< 2.5							W
ADDITIONAL FEATURES								
Supported Communication Interfaces	RS485, Ethernet, ZigBee (optional), Cellular (optional)							
Revenue Grade Metering, ANSI C12.20	Optional[3]							
Consumption metering								
Inverter Commissioning	With the SetApp mobile application using Built-in Wi-Fi Access Point for Local Connection							
Rapid Shutdown - NEC 2014, NEC 2017 and NEC 2020, 690.12	Automatic Rapid Shutdown upon AC Grid Disconnect							
STANDARD COMPLIANCE								
Safety	UL1741, UL1741 SA, UL1699B, CSA C22.2, Canadian AFCI according to T.I.L. M-07							
Grid Connection Standards	IEEE1547, Rule 21, Rule 14 (HI)							
Emissions	FCC Part 15 Class B							
INSTALLATION SPECIFICATIONS								
AC Output Conduit Size / AWG Range	1" Maximum / 14-6 AWG					1" Maximum /14-4 AWG		
DC Input Conduit Size / # of Strings / AWG Range	1" Maximum / 1-2 strings / 14-6 AWG					1" Maximum / 1-3 strings / 14-6 AWG		
Dimensions with Safety Switch (HxWxD)	17.7 x 14.6 x 6.8 / 450 x 370 x 174					21.3 x 14.6 x 7.3 / 540 x 370 x 185		in / mm
Weight with Safety Switch	22 / 10		25.1 / 11.4		26.2 / 11.9	38.8 / 17.6		lb / kg
Noise	< 25					<50		dBA
Cooling	Natural Convection							
Operating Temperature Range	-40 to +140 / -40 to +60[4]							°F / °C
Protection Rating	NEMA 4X (Inverter with Safety Switch)							

(1) For other regional settings please contact SolarEdge support
(2) A higher current source may be used; the inverter will limit its input current to the values stated
(3) Inverter with Revenue Grade Meter P/N: SExxxxH-US000BNC4; Inverter with Revenue Grade Production and Consumption Meter P/N: SExxxxH-US000BNI4 . For consumption metering, current transformers should be ordered separately: SEACT0750-200NA-20 or SEACT0750-400NA-20. 20 units per box
(4) Full power up to at least 50°C / 122°F; for power de-rating information refer to: https://www.solaredge.com/sites/default/files/se-temperature-derating-note-na.pdf

SOUTH CAROLINA LICENSED PROFESSIONAL ENGINEER No. 33919 DAVID C. HERNANDEZ
Exp. 06/30/22
06/28/22

TITAN SOLAR POWER

TITAN SOLAR
PHONE: 1-855-SAY-SOLAR
WWW.TITANSOLARPOWER.COM

PROJECT: 401 KING ST
MUNICIPALITY: BEAUFORT, SC
ZIP CODE: 29902
CLIENT: SARAH H POST
6.400 kW DC-STC/7.600 kW-AC

2

AUTHOR: EE
DATE: 28/JUN/22
REV: C

A5 - INVERTER SPECIFICATIONS

Power Optimizer

For North America

P320 / P340 / P370 / P400 / P401 / P405 / P485 / P505



POWER OPTIMIZER

PV power optimization at the module-level

- Specifically designed to work with SolarEdge inverters
- Up to 25% more energy
- Superior efficiency (99.5%)
- Mitigates all types of module mismatch losses, from manufacturing tolerance to partial shading
- Flexible system design for maximum space utilization
- Fast installation with a single bolt
- Next generation maintenance with module-level monitoring
- Meets NEC requirements for arc fault protection (AFCI) and Photovoltaic Rapid Shutdown System (PVRSS)
- Module-level voltage shutdown for installer and firefighter safety

solaredge.com

solaredge

/ Power Optimizer

For North America

P320 / P340 / P370 / P400 / P401 / P405 / P485 / P505

Optimizer model (typical module compatibility)	P320 (for 60-cell modules)	P340 (for high-power 60-cell modules)	P370 (for higher-power 60 and 72-cell modules)	P400 (for 72 & 96-cell modules)	P401 (for high power 60 and 72 cell modules)	P405 (for high-voltage modules)	P485 (for high-voltage modules)	P505 (for higher current modules)	
INPUT									
Rated Input DC Power(1)	320	340	370	400		405	485	505	W
Absolute Maximum Input Voltage (Voc at lowest temperature)	48		60	80	60	125(2)		83(2)	Vdc
MPPT Operating Range	8 - 48		8 - 60	8 - 80	8-60	12.5 - 105		12.5 - 83	Vdc
Maximum Short Circuit Current (Isc)	11			10.1	11.75	11		14	Adc
Maximum DC Input Current	13.75			12.5	14.65	12.5		17.5	Adc
Maximum Efficiency	99.5								%
Weighted Efficiency	98.8							98.6	%
Overvoltage Category	II								
OUTPUT DURING OPERATION (POWER OPTIMIZER CONNECTED TO OPERATING SOLAREDGE INVERTER)									
Maximum Output Current	15								Adc
Maximum Output Voltage	60					85			Vdc
OUTPUT DURING STANDBY (POWER OPTIMIZER DISCONNECTED FROM SOLAREDGE INVERTER OR SOLAREDGE INVERTER OFF)									
Safety Output Voltage per Power Optimizer	1 ± 0.1								Vdc
STANDARD COMPLIANCE									
EMC	FCC Part15 Class B, IEC61000-6-2, IEC61000-6-3								
Safety	IEC62109-1 (class II safety), UL1741								
Material	UL94 V-0 , UV Resistant								
RoHS	Yes								
INSTALLATION SPECIFICATIONS									
Maximum Allowed System Voltage	1000								Vdc
Compatible inverters	All SolarEdge Single Phase and Three Phase inverters								
Dimensions (W x L x H)	129 x 153 x 27.5 / 5.1 x 6 x 1.1			129 x 153 x 33.5 / 5.1 x 6 x 1.3	129 x 153 x 29.5 /5.1 x 6 x 1.16	129 x 159 x 49.5 / 5.1 x 6.3 x 1.9		129 x 162 x 59 / 5.1 x 6.4 x 2.3	mm / in
Weight (including cables)	630 / 1.4			750 / 1.7	655 / 1.5	845 / 1.9		1064 / 2.3	gr / lb
Input Connector	MC4(3)						Single or dual MC4(3)(4)	MC4(3)	
Input Wire Length	0.16 / 0.52								m / ft
Output Wire Type / Connector	Double Insulated / MC4								
Output Wire Length	0.9 / 2.95		1.2 / 3.9						m / ft
Operating Temperature Range(5)	-40 - +85 / -40 - +185								°C / °F
Protection Rating	IP68 / NEMA6P								
Relative Humidity	0 - 100								%

(1) Rated power of the module at STC will not exceed the optimizer "Rated Input DC Power". Modules with up to +5% power tolerance are allowed
(2) NEC 2017 requires max input voltage be not more than 80V
(3) For other connector types please contact SolarEdge
(4) For dual version for parallel connection of two modules use P485-4NMDMRM. In the case of an odd number of PV modules in one string, installing one P485 dual version power optimizer connected to one PV module. When connecting a single module seal the unused input connectors with the supplied pair of seals.
(5) For ambient temperature above +85°C / +185°F power de-rating is applied. Refer to Power Optimizers Temperature De-Rating Technical Note for more details.

PV System Design Using a SolarEdge Inverter(6)(7)		Single Phase HD-Wave	Single phase	Three Phase for 208V grid	Three Phase for 277/480V grid	
Minimum String Length (Power Optimizers)	P320, P340, P370, P400, P401	8		10	18	
	P405, P485, P505	6		8	14	
Maximum String Length (Power Optimizers)		25		25	50(8)	
Maximum Power per String		5700 (6000 with SE7600-US - SE11400-US)	5250	6000(9)	12750(10)	W
Parallel Strings of Different Lengths or Orientations		Yes				

(6) For detailed string sizing information refer to: http://www.solaredge.com/sites/default/files/string_sizing_na.pdf
(7) It is not allowed to mix P405/P485/P505 with P320/P340/P370/P400/P401 in one string
(8) A string with more than 30 optimizers does not meet NEC rapid shutdown requirements; safety voltage will be above the 30V requirement
(9) For 208V grid: it is allowed to install up to 6,500W per string when the maximum power difference between each string is 1,000W
(10) For 277/480V grid: it is allowed to install up to 15,000W per string when the maximum power difference between each string is 2,000W

© SolarEdge Technologies Ltd. All rights reserved. SOLAREDGE, the SolarEdge logo, OPTIMIZED BY SOLAREDGE are trademarks or registered trademarks of SolarEdge Technologies, Inc. All other trademarks mentioned herein are trademarks of their respective owners. Date: 04/2020/V02/ENG NAM. Subject to change without notice.

Intertek RoHS

TITAN SOLAR POWER

TITAN SOLAR
PHONE: 1-855-SAY-SOLAR
WWW.TITANSOLARPOWER.COM

PROJECT: 401 KING ST
MUNICIPALITY: BEAUFORT, SC
ZIP CODE: 29902
CLIENT: SARAH H POST
6.400 kW DC-STC/7.600 kW-AC
2

AUTHOR: EE
DATE: 28/JUN/22
REV: C

A6 - OPTIMIZER SPECIFICATIONS

SOUTH CAROLINA LICENSED PROFESSIONAL ENGINEER
No. 33919
DAVID C. HERNANDEZ
Exp. 06/30/22
06/28/22

LOCATION OF NEAREST URGENT CARE FACILITY
NAME:
ADDRESS:
PHONE NUMBER:

NOTES:

- INSTALLER SHALL DRAW IN DESIGNATED SAFETY AREA AROUND HOME
- INSTALLERS SHALL UPDATE NAME, ADDRESS, AND PHONE NUMBER OF NEAREST URGENT CARE FACILITY RELATIVE TO THE JOB SITE BEFORE STARTING WORK.

PERSONS COVERED BY THIS JOB SAFETY PLAN

INJURED AT WORK TODAY? **INITIAL YES OR NO**

PRINT NAME	INITIAL		YES	NO

UNDERGROUND DIG REQUIRED?
YES_____ PERMIT #_____

SOUTH CAROLINA LICENSED PROFESSIONAL ENGINEER
No. 33919
DAVID C. HERNANDEZ
Exp. 06/30/22
06/28/22

TITAN SOLAR POWER

TITAN SOLAR
PHONE: 1-855-SAY-SOLAR
WWW.TITANSOLARPOWER.COM

PROJECT: 401 KING ST
MUNICIPALITY: BEAUFORT, SC
ZIP CODE: 29902
CLIENT: SARAH H POST
6.400 kW DC-STC/7.600 kW-AC
2

AUTHOR: EE
DATE: 28/JUN/22
REV: C

A7 - SAFETY PLAN

Historic Review Board Meeting Staff Report

From the Department of Community and Economic Development
10 August 2022

1 Summary of Request

401 King Street, Alterations/Additions
The applicant is requesting conceptual approval for addition of a solar panel system to a single-family residence at 401 King Street.

This property is in the Historic Preservation Neighborhood.

Background: This is the first application received for this project.

2 Facts

Property Address:	401 King Street
Parcel ID:	R120 004 000 0650 0000
Case Number:	22-40 HRB.1
Applicant:	**Allison Efird, Titan Solar Power**
Zoning:	T4-HN
Use:	Single Family Dwelling

District Development Standards for T4-HN:

- **Setback requirements – Primary Structure:**
  - *Front —Average prevailing setback on block*
  - *Rear setback – 15' min. h*
  - *Side Corner/Alley – 5'min.*
  - *Side Interior – 6'min., 10' min. in The Point*
- **Lot Width at Front Setback:** 40' min., 60' min. in The Point
- **Lot Size:** 4,000 sf min., 6,000 sf min. in The Point
- **Impervious Surface Coverage***:* 55% maximum for rooftops, additional 10% allowed for total impervious coverage.
- **Frontage Build-Out:** 75% max.
- **Maximum Building Height:** 3 stories max.

References:

Beaufort Code
Beaufort Preservation Manual
Beaufort Preservation Manual Supplement
Secretary of the Interior's Standards for Treatment of Historic Properties

3 STAFF COMMENTS

Staff Acknowledgements

A. This property is located in the Beaufort Preservation Neighborhood. It is listed on the National Register of Historic Places List of Contributing Structures as a "2-story frame dwelling" built circa 1856.

B. The applicant's request includes installing PV panels on the porch roof, main house roof, and addition in the rear, as well as equipment on the east façade. These panels would be visible from King Street, Federal Street, and Hamilton Street.

C. Section 8.5.2.A of the Beaufort Code states that "any structure in the Historic District that is visible from the street must be approved by the Historic District Review Board."

Staff Conditions

1. Applicant should study the remaining lifespan of the asphalt shingle roof. Future roof replacements may be hindered by the recent installation of solar panels and negatively impact the historic material by not replacing the roof in a timely manner.

2. Section 8.5.2.B of the Code states that "the system shall comply with the maximum height standards for the zone in which it is located. Units may be angled but shall not be elevated above the roofline of the structure on which it is mounted." The applicant has not provided a height in which the panels are elevated. Applicant to provide this dimension and ensure that the units do not rise above the roofline of the structure.

3. This new system will be visible from several public streets. While staff understands the need to place panels facing south, staff does not approve of the installation of these panels on the main house. These panels obstruct much of the roof from view and staff strongly recommends that the applicant consider placing these panels in a less conspicuous area of the house.

4. Applicant should provide a structural engineer's report indicating that the existing historical roof framing will support the proposed attachment system in a high wind situation.

5. Applicant should provide an elevation showing ancillary equipment attached to the envelope of the house which is visible.

6. Two M5x60 lag screws are used to tie down each end of a panel and these connections are sealed with an E-curb exterior ring and M-1 and 1-Part sealant. The applicant has not specified what size of E-curb ring will be used, and staff has concerns about the watertightness of the sealant particularly on a sloped roof. While the applicant has stated that the current asphalt shingle roof is 10-12 years old, the rafters underneath may be historic and original to the house, and this proposed connection detail may negatively impact the historic fabric.

7. Applicant has provided two detail drawings showing the panel, cross rail, splice foot, and lag screws tied into the historic rafter. The first detail (S4) shows the panel set closer to the roof but without any waterproofing details. This detail is less invasive on the historic rafter as it only

requires a 1.5” min embed in the rafters, whereas the detail with the e-curb ring and sealant (S5), while it provides the E-curb waterproofing, requires a 2.5” min. embed in the rafters. The applicant should clarify if these two details correspond to specific sections of the panels. Applicant should provide a detail that provides both a sound waterproofing detail as well as a minimally invasive embed in the rafter.

STAFF RECOMMENDATION:

Denial of Conceptual Approval with conditions noted.

June 8, 2022

Beaufort Mayor and City Council
City of Beaufort
1911 Boundary Street
Beaufort, SC 29902

RE: Amending the Demolition Process and Expiration Period

Dear Mayor and Council Members,

Currently any demolition approvals and permits issued by the City of Beaufort have no expiration (p 182 of the Beaufort Code). A clear definition of Demolition needs to be added.

In the past, demolition permits have been approved and property owners have not taken action in a timely manner. When an owner receives approval to demolish a structure, action should be taken to demolish and therefore prevent further hazardous or unsafe conditions to the property.

The Historic District Review Board (HRB) is recommending the following concepts be used to amend the demolition process:

1. The Definition for Demolition shall be defined as (from City of Charleston BAR):

   Demolition is defined as the removal of an entire structure or a substantial portion of a structure visible from the public right-of-way or a substantial portion of features of a structure that are visible from the public rights-of-way that define its historic architectural character, such as roofs, columns, balustrades, chimneys, siding, windows, doors, shutters, site walls, fences, and other unique architectural features, which if lost, would compromise the historic architectural character of the structure.

2. Impose a 24-month limit on demolition after HRB approval and issuance of The Certificate of Appropriateness (COA). The owner is required to receive a demolition permit and complete the process of demolition and cleanup after demolition, prior to the expiration of the approval period. This limitation is complimentary to the limitation of the Certificate of Appropriateness and other City of Beaufort permit periods (p. 182 of the Beaufort Code).

3. Demolition Approvals will not be automatically extended. Extending the period would require review by the HRB and be limited to a 12-month period.

We appreciate your consideration of our recommendations to the change the demolition process and expiration period.

Sincerely,

Jeremiah Smith, Chairman
Mike Sutton, Vice-Chairman
Stacy Applegate
Maxine Lutz
Michelle Prentice

Historic District Review Board