City of Beaufort Department of Planning and Community Development
Post Office Drawer 1167
1911 Boundary Street
Beaufort, South Carolina 29902
Phone (843) 525-7011 / Fax (843) 986-5606
Website: www.cityofbeaufort.org

See back of application for fees

CITY OF BEAUFORT HISTORIC DISTRICT REVIEW BOARD PROJECT APPLICATION (Revised – 07/15/2011)

Application #: _____ **Date Received:** _____ **Zoning District:** _____

Property Address: 804 Carteret

Applicant: LUISA MESHEKOFF Phone: _____

Applicant's Address: 204 N. 12th ST. TAMPA, FL 33602

Beaufort County 1997 Historic Sites Survey listing: _____

Property Owner: MESHEKOFF Phone: 813-286-5055

Owner's Address: SAME

Architect: SAME Phone: _____

Architect's Address: _____

REQUEST FOR:

( ) Conceptual Review
(X) Final Approval
( ) Preliminary Review
( ) Change After Certification

NATURE OF WORK: (Check All That Apply)

( ) Color changes
( ) Signage, Awnings
( ) Legal Plat
( ) Other: _____
(X) Alterations, Additions
( ) New Construction
( ) Minor/Major Demolition or Relocation

DRAWINGS/MATERIALS ACCOMPANYING APPLICATION: (Refer to Appropriate Checklists for Requirements)

(X) Photographs
(X) Site Plan/Plat
(X) Floor/Roof Plans
(X) Detail Drawing
( ) Color Sample
( ) Material Sample
(X) Elevation Drawings
( ) Model

EXPLANATION AND DESCRIPTION OF WORK:

See attached please

Pursuant to Section 6-29-1145 of the South Carolina Code of Laws, is this tract or parcel restricted by any recorded covenant that is contrary to, conflicts with, or prohibits the activity described in this application? ____ Yes (X) No

An Application is incomplete until all required information is submitted. Incomplete applications will not be placed on a Board agenda. Applications are reviewed based upon the *Beaufort Preservation Manual and Supplement*, or the *Northwest Quadrant Design Principles* (refer to www.cityofbeaufort.org) which the applicants are strongly encouraged to purchase. Office copies are available for reference. In order that meetings not be excessively long, the Board maintains a strict policy that no more than ten applications are reviewed in any one meeting. If you are under a tight time frame, please be sure to submit your application early. **Submittal Requirements:** 8 hardcopies of all documents + a digital copy of all the documents must be filed by 12:00 noon on the deadline date. If the applicant or a representative is not present at the meeting, the application will not be reviewed.

OWNER'S SIGNATURE: _____ DATE: 4-28-14

APPLICANT'S SIGNATURE: _____ DATE: 4-28-14

– OVER FOR FEE SCHEDULE –

EXISTING FRONT ELEVATION
FACING CARTERET STREET

Existing windows on the front are 2'-7"x5'-2" w/ 7'-2" head height and are to be replaced with new insulated windows that are 3'-0"x6'-0".
On Photograph #4 you can see that the house framing is suitable for the new 3' wide window. Although the existing head height will be maintained because of it's relationship to the front porch ceiling, there are no headers above these windows.

804 Carteret Street
June 8, 2006

page from 2006
permit application

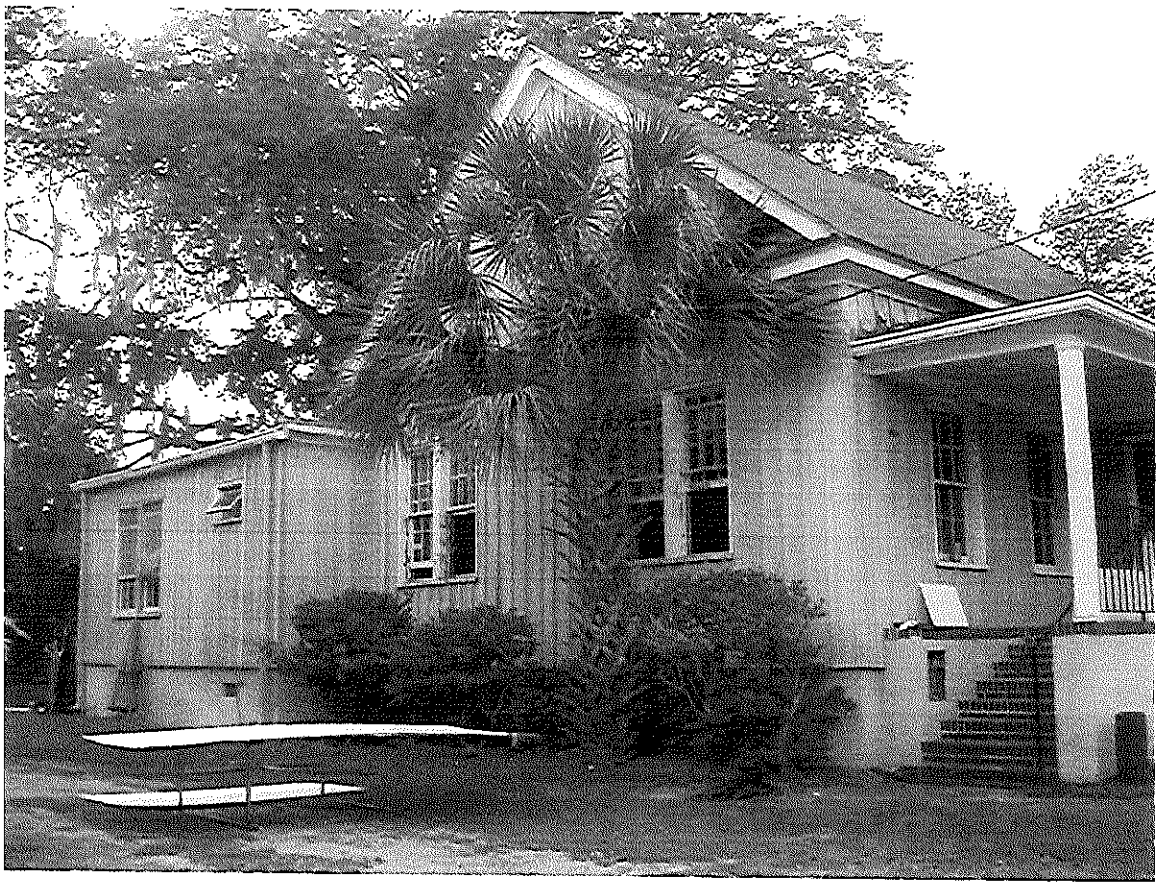

EXISTING LEFT SIDE ELEVATION

OPPOSITE SIDE OF ORIGINAL HOUSE IS MIRROR IMAGE

Existing windows on the side are 2'-4"x5'-6" with a 7" mull w/ 7'-11" head height. The four side windows that are on the original house are exactly the same on the opposite side. These double window units are to be replaced with new, insulated single window units that are 3'-0"x6'-0". The same head height will be maintained.

804 Carteret Street
June 8, 2006

page from 2006
permit application

City of Beaufort Department of Planning and Development Services

M E M O R A N D U M

TO: **Technical Review Committee**

FROM: **Lauren Kelly, Project Development Planner**

DATE: **November 5, 2013**

SUBJECT: **804 Carteret Street Timeline & History**

==========

History: This building is listed on the tax records as constructed in 1900, with the garage constructed in 1940. It's shown on the 1912 Sanborn Insurance maps, which are the first maps that show this block of the city. It appears to have been built as the Catholic Rectory and sold to the current owner in 2006.

Permit and Design Application Timeline:

- April 26, 2006 – Minor demolition permit issued for interior finishes, floors, suspended ceiling. Note on permit: No change in exterior color or design without HRB approval."
- April 13, 2007 – Permit issued for interior renovations. Note on permit: "This permit does not include any exterior work. All exterior work has to be approved by HRB."
- January 7, 2008 – After the fact permit issued – replace 3 windows in-kind.
- February 20, 2008 – Permit issued to replace 8 windows in-kind.
- Oct. 29, 2008 – Repair/Renovate Residential permit issued for "correct header issues, install beam & plumbing". There's a note on the permit that any subs hired must be reported to the city, or it could result in a fine.
- March 5, 2010 – Original permit expired, need further inspections – final for plumbing and electric. In the listed inspections there was one pass for the rlumbing rough In, two "partial pass" for the insulation and electrical rough in in the kitchen only, and three outstanding inspections.
- April 1, 2010 – HRB application (incomplete) to rebuild existing garage "to include new concrete floor, walls and roof."
- April 16, 2010 – application above pulled from HRB agenda
- April 21, 2010 – Repair/Renovate Residential permit issued for rebuilding corner of existing garage & remove garage door. OK per Donna Alley.

N
10/10
02/11/2007
Pictometry
© 2000-2014
Ortho

N
7/12
02/02/2009
Pictometry
© 2000-2014
Orino

Pictometry

9/11
02/01/2009
N
Eave Line of 2009 roof
Ortho
Pictometry
© 2000-2014

North Side of Building
-extensive roof modification
-new arched fixed window
-new arched cottage-style window

Garage
-new roof
-new fascia
-new windows
-new siding
-concrete slab may be new ~~as well~~

South Side of Building

-roof modification

-a diamond-shaped window added onto rear

-a pair of double hung windows removed & replaced with 4 diamond-shaped windows

CITY OF BEAUFORT
Historic District Review Board
Full Board
Staff Report
Meeting of May 14, 2014

Case Number:	HR14-22
Property Address:	804 Carteret Street
Applicant:	Luisa Meshekoff
Type of Request:	Alterations & Additions – Post Facto
Zoning:	OC – Office Commercial

Historical: 804 Carteret Street is located in the Old Commons Neighborhood. Circa 1900, it is the former Catholic Church rectory, but due to significant alterations, is not listed on the 1997 Above Ground Historic Sites Survey.

Background: **Please see the attached timeline as to the history of work on this project from 2006-2013. Most recently, in October 2013, work had begun on this project again without a permit. Upon further inspection, it was made evident that a significant amount of construction had been done without a permit, or exceeding the permit. The fundamental exterior changes that have been done, or are in progress, that have not received HRB approval or a building permit are:**

- **South Side:** Double-hung windows removed and replaced with diamond windows; modification to the roof forms.
- **North Side:** Extensive roof modification; two arched windows installed.
- **Garage:** new roof, fascia, windows and siding.

Requests: **The applicant is requesting to complete the roof modifications, retain the windows as they exist, and also replace the front porch railings with turned rails as seen in the 1912/1930 historic photograph.**

Zoning: OC – Neighborhood Commercial

- Setbacks:
  - Front: 10’
  - Side: 10’
  - Rear: 10’
  - Side & Rear for Accessory Buildings (Historic District): 5’
- Maximum Height: 50’
- Impervious Surface Coverage, Max: 60%

Synopsis of Applicable Guidelines:

- Secretary of the Interior Standards #9 & 10 speak to new additions, particularly with regards to form.
- The *Preservation Manual Supplement*, p. 18, addresses forms: "…the form of additions should be complementary to the overall form of the house."
- The *Preservation Manual Supplement*, p. 39 addresses windows: "Replacement windows should match the number of lights of the existing sash…the number of lights in the new window should be consistent with the style and period of the building."

Design Issues & Staff Recommendations:

- **Evolution Timeline:** This house was built at the turn of the century as a one-story cottage with a semi-formal wrap-around porch. By the 1950s, the wrap-around porch had been removed, and the front had been infilled with screen. By 1979, a portion of the front porch had been infilled with building, the siding was changed to board and batten, and an addition had been added to the rear, protruding out the south side. The current owner, Ms. Meshekoff bought the building in 2006. The majority of the exterior changes have been done between 2008 and 2013. The diamond windows appear to have been installed in 2009. The roof modifications appear to have been started in 2013.
- **Roof:** Staff recommends than an architect be hired to do a formal roof plan to resolve the roof form issue. The roof configuration that is proposed, while it makes sense from a functional standpoint, is not appropriate from a form, massing, or roof line standpoint. Shed roofs that extend the entire width of the house are not typically seen in this area. Staff recommends considering a gable form over the rear as depicted below:

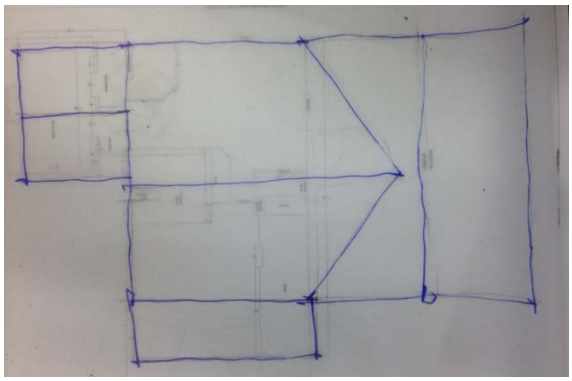

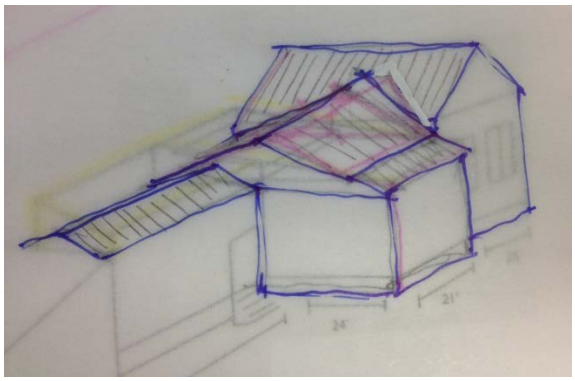

- **Windows:** The diamond windows and the arched windows are not in character with the house or the historic district. The diamond windows on the south side are very visible from Carteret Street. Staff recommends replacing the arched windows with standard double hung windows, and rotating the diamond windows to be square, at a minimum. All windows should be properly trimmed out and painted to match the rest of the windows.
- **Garage:** The alterations to the garage are not visible from the public right-of-way and are in keeping with the general mass, scale and detailing of the house. Staff recommends approval for these changes to remain as they are**.**
- **Porch Railings:** Replacing the existing metal railings with turned railings is

appropriate if it is the first step in a long term vision to restore the character of the house.

Staff Recommendation: Specific recommendations are listed above with each design item in question. Staff appreciates the applicant's desire to restore this house, and understands that she purchased it in an already altered state. However, as a general statement, any alterations and additions should be in keeping with the standards of the historic district and those that aren't should be modified so they are appropriate.

Summary of exterior work that I have completed

- Windows
- Repair to board and batten

Further proposed changes and work I would like to complete

- Completing the roof to the current design that is in progress, it is 90% complete
- Adding balustrades if the committee feels it enhances the property
- Extending the landing to the back door so that the ingress and egress is facilitated. I do not as yet have a design or a concept when this work could occur. Perhaps in 2016 I could submit a drawing and request for the same. A porch veranda similar to that that was original main house utilizing the same balustrades could be added to this section.

Requests

Take into consideration the original sq. foot area compared to that which was added (twice as much as the original) as well as the poor design that was clearly ignored before 2006. There were so many add-ons to this house that I do not know how to support its historic value. I am therefore asking that I receive permission to complete the roof to the current design and leave the windows that are installed. The arched windows are opening s that we found, otherwise we would not have taken the expense to provide them. The diamonds windows inspired by Grace White and give the boxy façade some interest.

804 Carteret

Exhibits

A. **Sanborn Map of 1912** (discovered and provided by Lauren Kelly)
B. **Line Drawing of original foot print and roof line**
C. **Line Drawing of roof line as purchased in 2006**
D. **Line Drawing of roof line in 2014 with modifications highlighted**
E. **Line Drawing of as purchased with approximate sq. footage per area**
F. **Circa 1912 Photograph and record of deed** (discovered and provided by Lauren Kelly)
G. **Circa 1955 Photograph**
H. **Circa 1979 Photograph**
I. **East elevation with balustrades offered**

Sanborn Map of 1912- Exhibit A

The map shows the footprint of the original L shaped structure. It describes a wraparound veranda on the east and the south side of the front structure and also indicates a porch/ veranda on the south side of the back shed roof section.

Line Drawing – Exhibit B

This describes the foot print and roof line of the original structure from a southerly POV. The authenticity of the footprint is confirmed by the Sanborn Map of 1912 and also in our physical findings as the original timbers were still in place. Approximate exterior square footage 1117. Approximate interior sq. footage 1100.

Note: There is insufficient information to render an image of a veranda that wrapped the building from the east to the south. Photographs of the south elevation are not available. Exhibit F shows the east elevation and photographic evidence that the porch wrapped to the south side, but we have no clear indication of its shape and so we have not included it.

Line Drawing- Exhibit C

This describes the foot print and roof line of the building, as seen from the south side, as purchased in 2006 from St. Peter Catholic Church. Approximate square footage 2189.

Line Drawing –Exhibit D

This describes the foot print and roof line of the building as seen from the southerly view in 2014. The added sections are highlighted.

Exhibit E

Square footages

Major distinctions from the photo circa 1912 to the photo circa 1950.

- Removal of the wrap veranda on the south elevation.
- Alteration from a veranda to an enclosed screened porch

Major distinctions from the photo circa 1950 to the photo circa 1979

- Lap siding was covered making the walls approximately a foot thick by pine board and batten.
- Removal of the chimneys
- Enclosed screened porch on the east elevation was replaced by full enclosure on the northeast corner and entryway stair was removed from the center to a brick staircase extending to the south. Iron railing was added as well
- An addition of a flat roof structure was added to the shed roof structure extending to the south and exceeding the footprint of the front portion of the house by 7 feet. This addition is approximately 504 sq. feet.

Discovery and History

At the November meeting of 2013 Lauren Kelly brought to light information about 804 Carteret in photographs and transfer documents predating 1979. From that meeting I learned that the Church did not construct this house but purchased it in 1922.

I purchased the structure in 2006. From the information then available it appeared to Historic Preservation and to me that it this was a deliberately simple structure - a plain building without any decorative aspects. There was some confusion in 2006 when I first purchased this property. Historic preservation led me first bungalow style for restoration then towards cottage. Everyone was guessing. We have better information as of 2013. Some of the best information was in uncovering the bones of the structure. We found archways and other architectural elements which made no sense based on the history we were told that this was a plain home, " a poor man's house"

The Photo circa 1912- Exhibit E, refutes this completely shows a lovely house complete with decorative balustrades and tiered capitals. Architectural elements that are in keeping with and support the original architectural elements we uncovered.

No agency protected this building from years of unethical alteration and poor workmanship that was dangerous because it was structurally substandard. That is a 45 year period of Historic preservation not intervening. There was substantial damage done before the historic preservation considerations were in effect. By 2006, the added square footage is twice that of the original structure. The interior of building boasts craftsmanship of a day gone by. The exterior is not recognizable as historic.

As an artist and trained architect, with a family history of passion for older structures including the first skyscraper in NY, 13 stories built in 1880, known as 170 5th avenue, and a Con Edison substation also a landmark, to name a few, to the best of my abilities, enhanced an entirely bastardized structure.

Diamond windows

Cut as side lights by the front door of Grace White's home, 802 Carteret, built by her father, are diamond shapes. I had the pleasure of spending time with Grace. Though her eyesight was poor, her perceptions and wit remained keen. She filled in many mysteries of how 804 Carteret had been added on to; particularly in how the Garage storage area came to be.

She watched our progress and was pleased that the house was cared about.
Creative liberty was taken in placing the proposed square windows on a cant creating diamond windows. Grace White was part of this creative process and an inspiration for the same. She was so pleased that the design by her front door was carried over to 804. I apologize but it makes no sense to me that a 1970ties add on could be historic. This 1970ties add was replete with an aluminum ranch style window now replaced by 6 over 6 cottage style.

Arched windows

This is what we found, this is what we replaced. From the main building to the shed roof were 3 exits. All were rounded. Two have been maintained.

How best to restore authenticity to the structure?

It is unreasonable to ask me to be responsible for 80 years of bastardization, 45 of which an existing agency did nothing. I chose Beaufort as a community because of the artistic awareness. What is art and an artful way to best compensate for architectural damage can certainly be disputed.

I have sourced similar balustrades that were used in the original design of this home in the 1912 photo and are offering installation of the same. Miss Kelly asked if they were wood. They are not and in a wet environment like Beaufort wood is material with longevity.

If this committee feels the balustrades improve this home and restore some dignity to it, I am happy to do so. I am offering this in exchange for allowing me to complete the roof (there are only 2 pieces of siding that were not installed) and protect this home from weather and critters who are happily nesting there this season. I am asking that what has occurred from 2007 to present remain.

Color

The color of the home is to remain. The yellow on the siding is a primer coat only. If the committee has suggestions for a color I am happy to comply.

A

RECEIVED
APR 25 2014
for 5-14-14

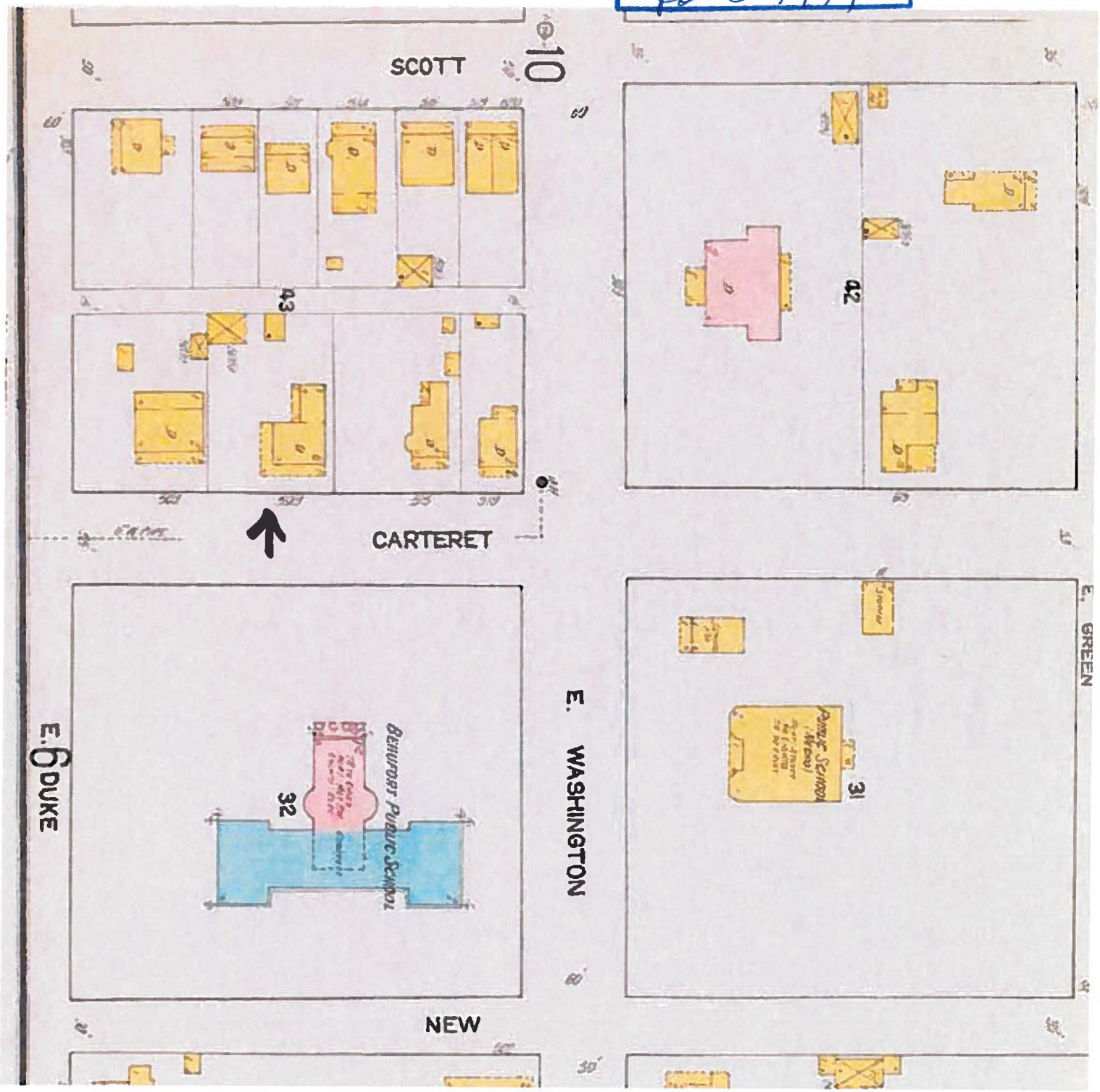

PRODUCED BY AN AUTODESK EDUCATIONAL PRODUCT

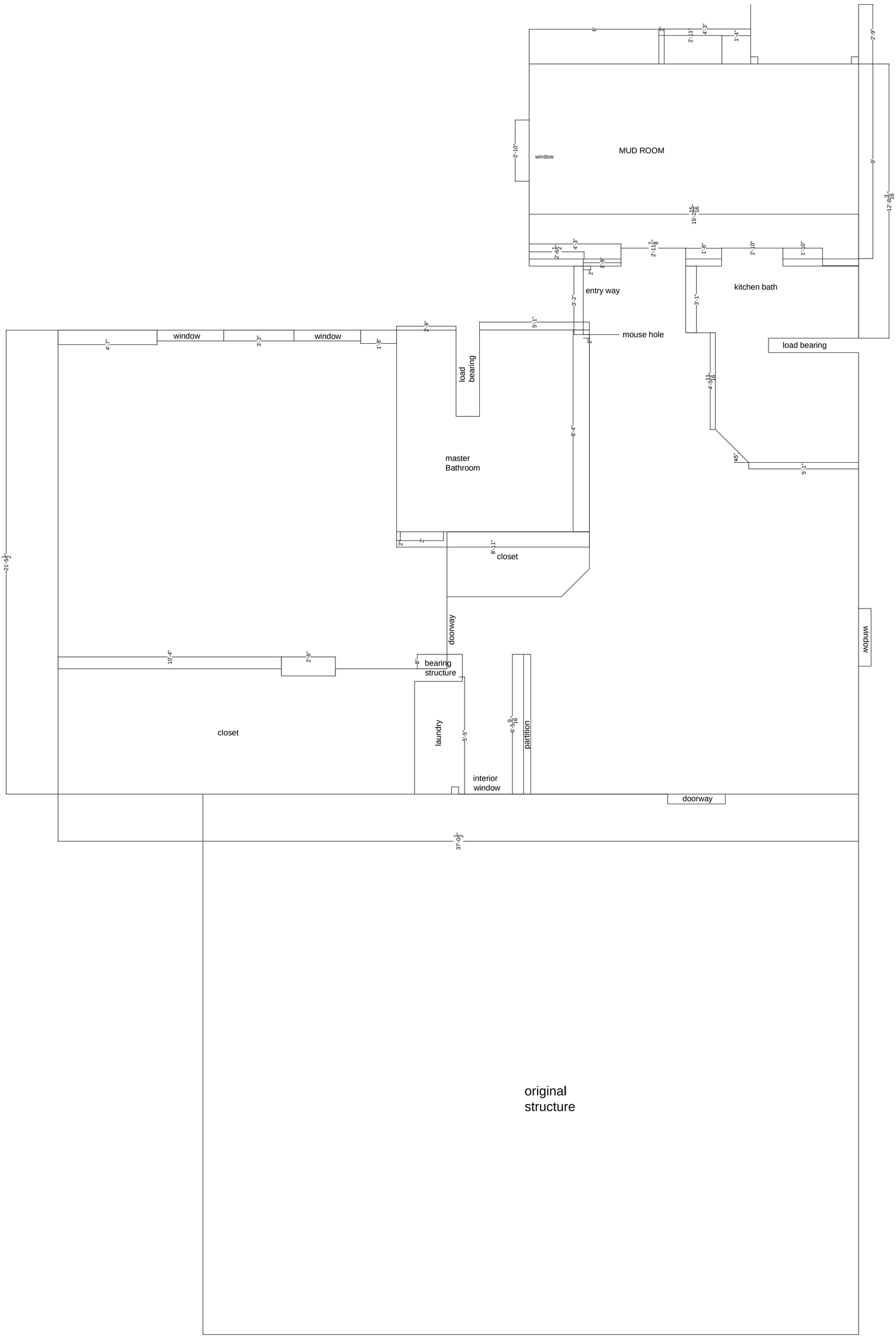

PRODUCED BY AN AUTODESK EDUCATIONAL PRODUCT

PRODUCED BY AN AUTODESK EDUCATIONAL PRODUCT

PRODUCED BY AN AUTODESK EDUCATIONAL PRODUCT

Exhibit B

Aprox sq footage 1107

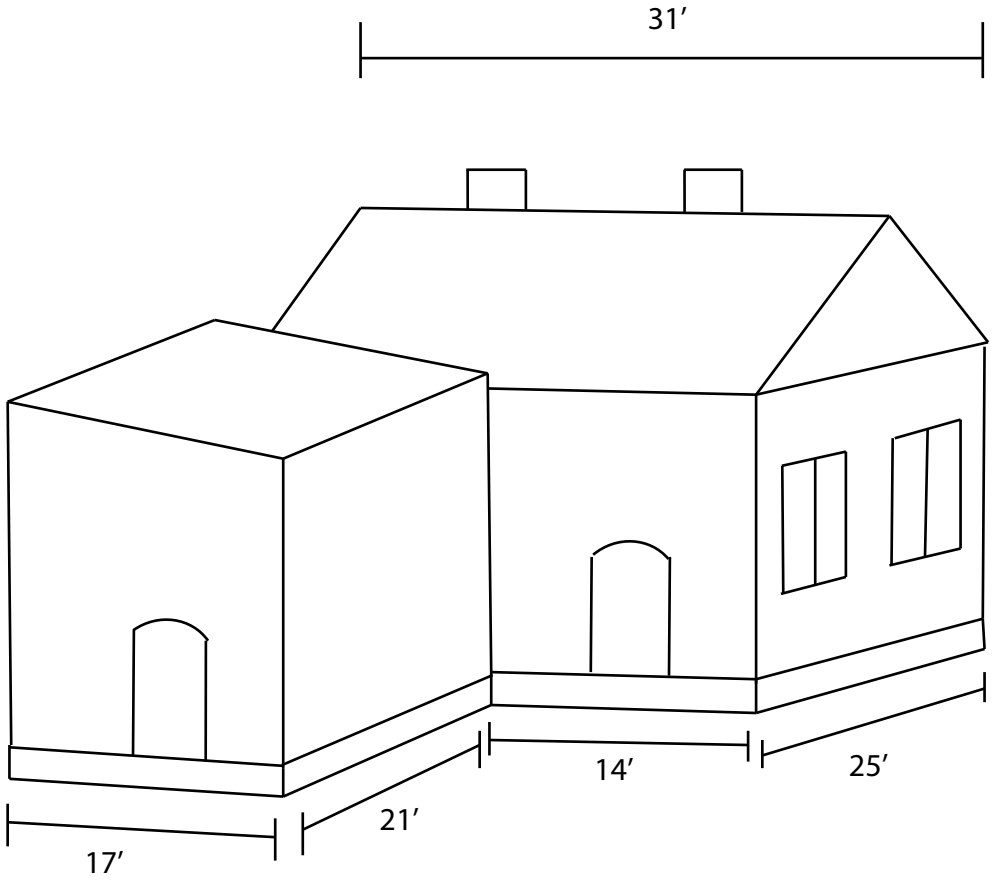

Exhibit C

Aprox Sq Footage 2231

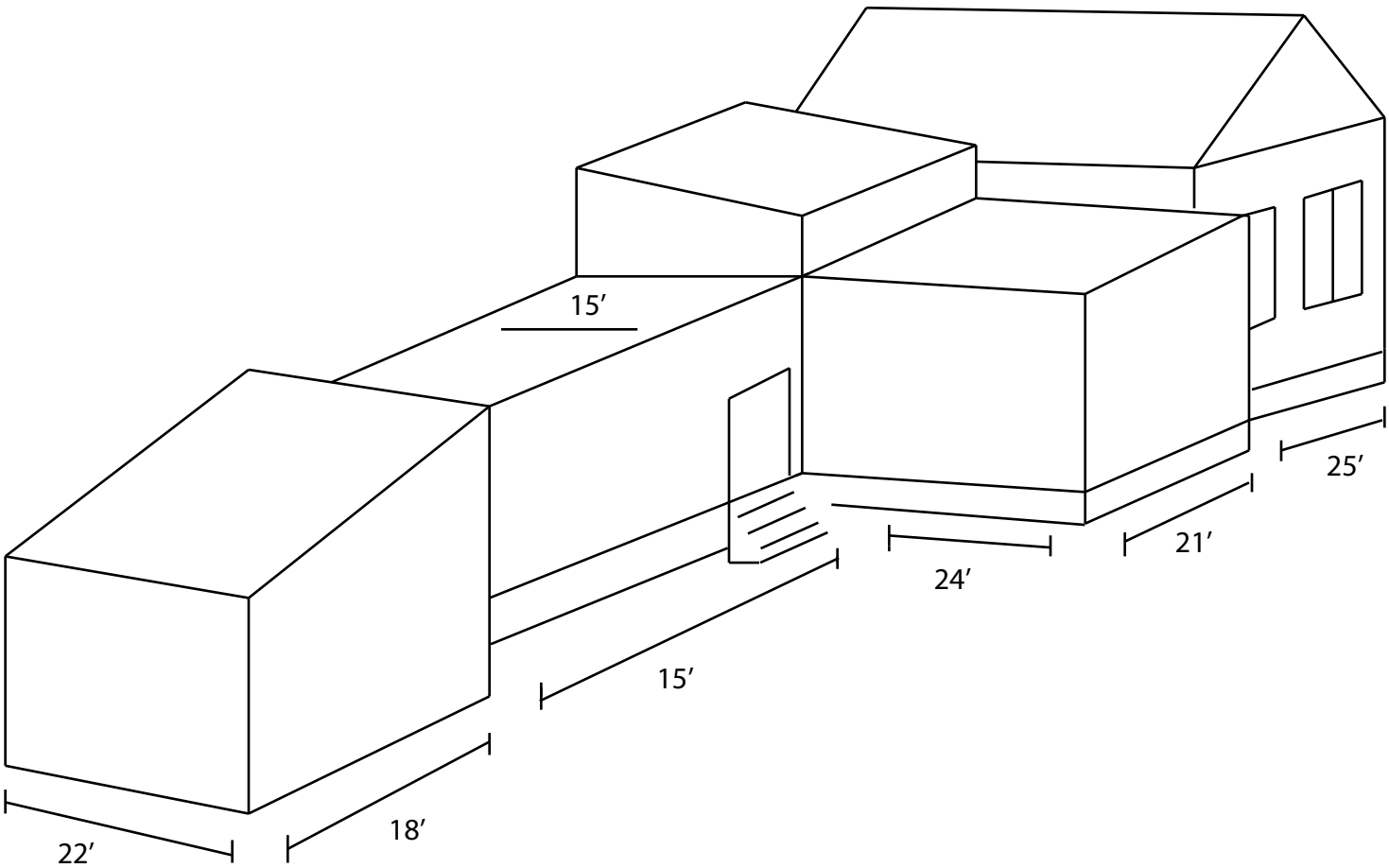

Exhibit D

Roof line with revisions

RECEIVED
APR 25 2014
fax 5-14-14

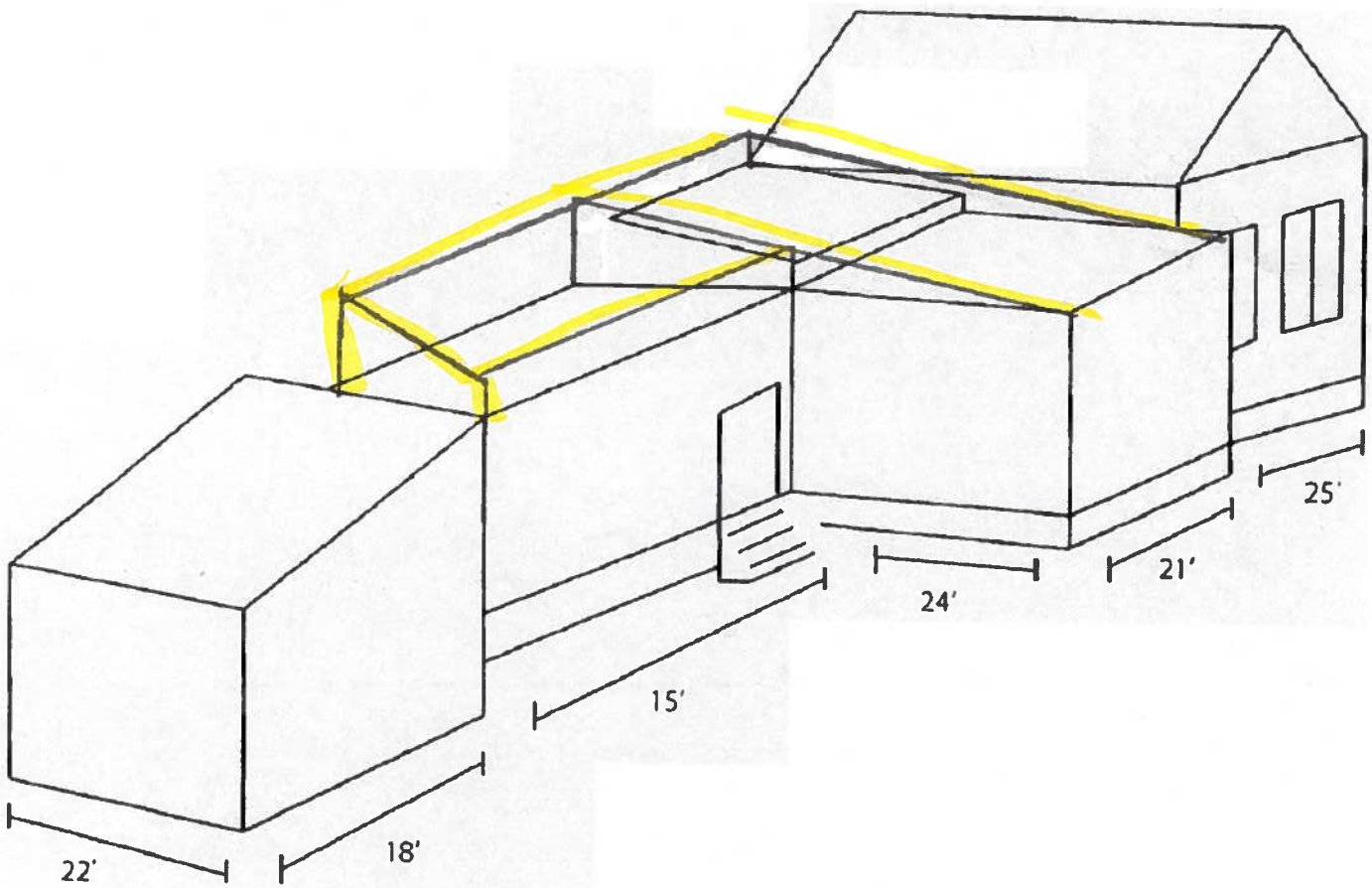

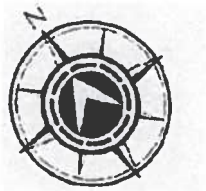

Exhibit E
Approx Sq Footage 2231

RECEIVED
APR 25 2014
for 5-14-14

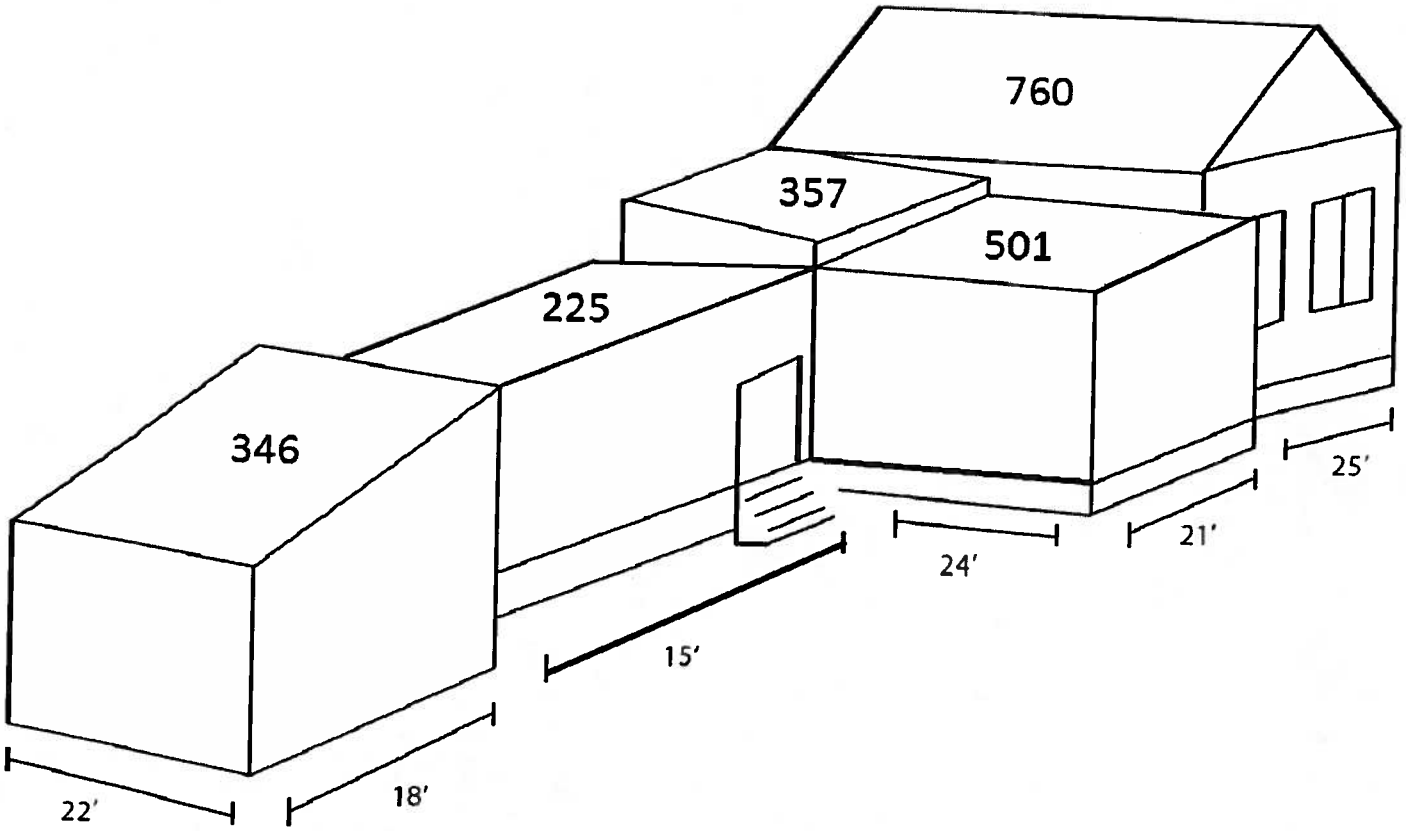

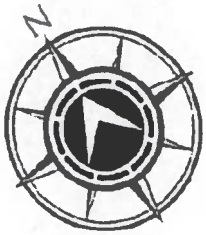

RECEIVED
APR 25 2014
for 5/14/14

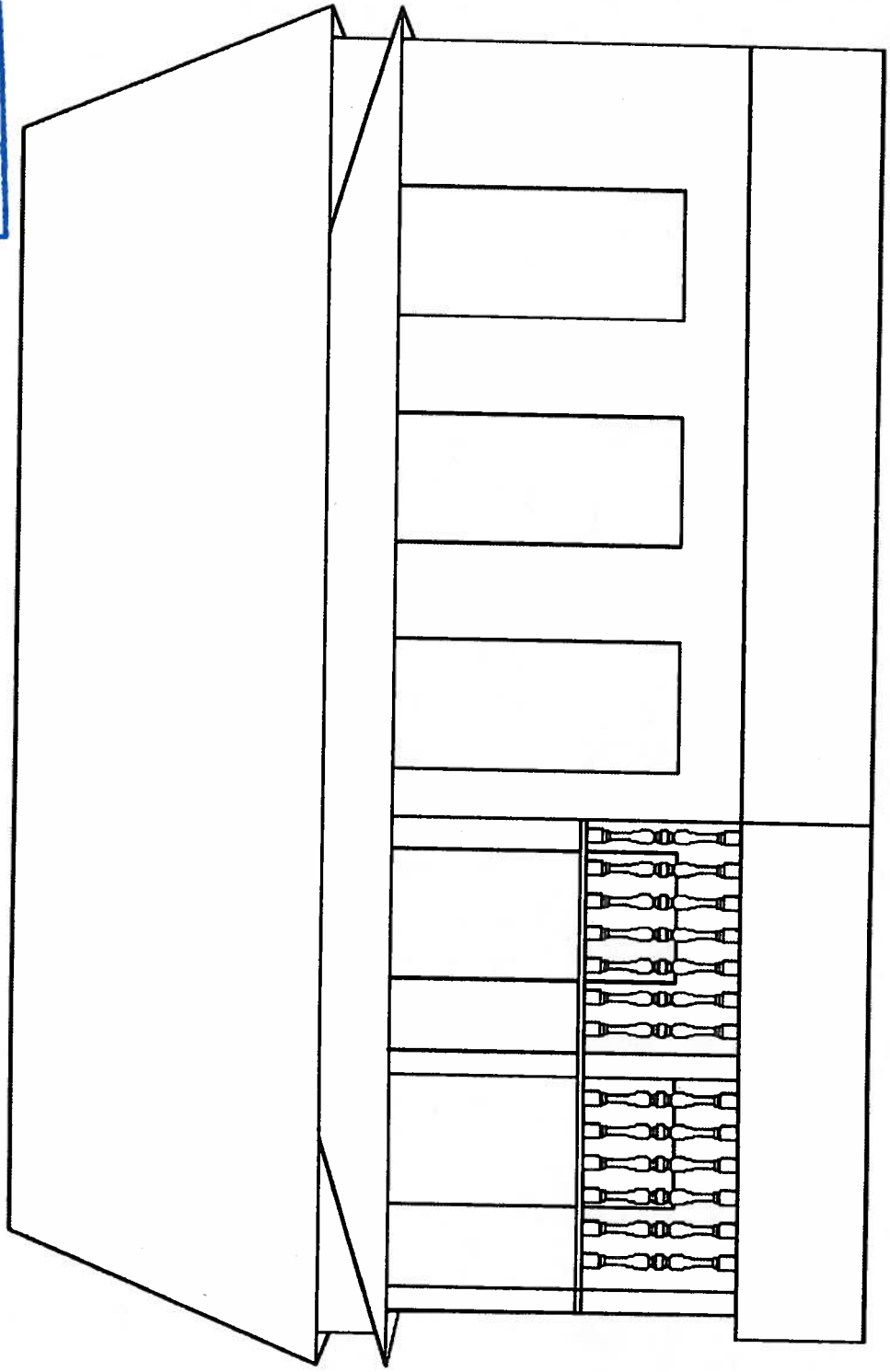

H

Customer Signature:

Date:

NOTE: MEASUREMENTS TAKEN FROM PRODUCTION PART.

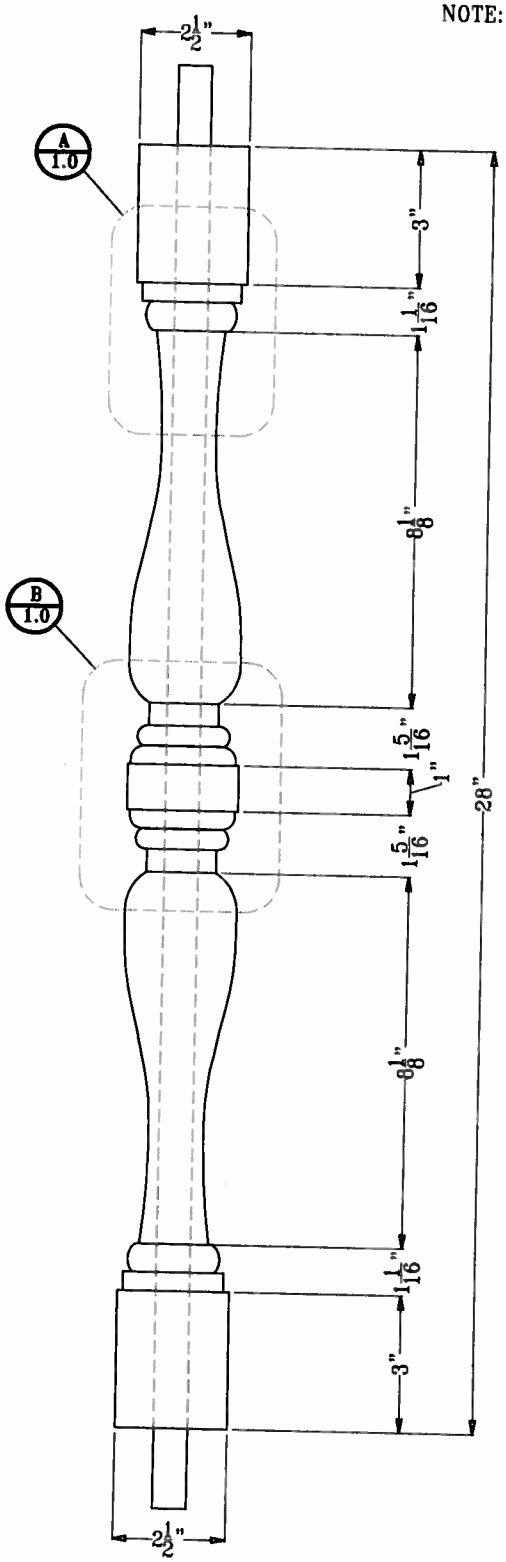

ELEVATION - BALUSTER
ARCH. REF. N.A. SCALE 3"=1'0"

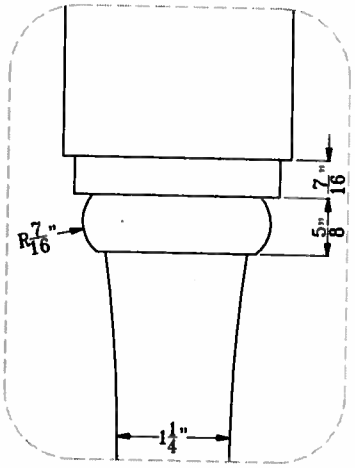

A 1.0 DETAIL - BALUSTER
ARCH. REF. N.A. SCALE 6"=1'0"

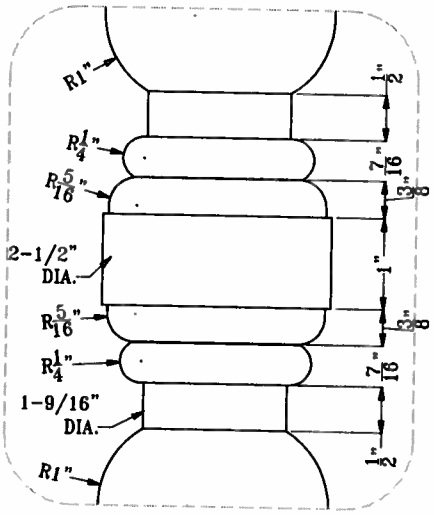

B 1.0 DETAIL - BALUSTER
ARCH. REF. N.A. SCALE 6"=1'0"

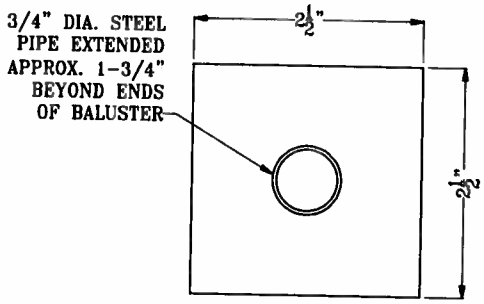

END VIEW - BALUSTER
ARCH. REF. N.A. SCALE 6"=1'0"

S=5-1/8"

WORTHINGTON
YOUR ONLY SOURCE FOR FINE ARCHITECTURAL DETAILS
17842 ASHLEY DRIVE, SUITE C
PANAMA CITY BEACH, FL 32413
PHONE: 800-872-1608 FAX: 850-640-0488
WEBSITE: WORTHINGTONMILLWORK.COM

DWG NO: 20-100-28		DWG TITLE: BALUSTER FOR 3-5/8" SYSTEM	
DATE: 12-19-07	REV. 2	ITEM NO: 20-100-28	
REV. 1	REV. 3		
FILED UNDER: DRAWINGS	SCALE: SEE ABOVE	DIM. TOLERANCE: N.A.	

ALL ITEMS ARE DRAWN FOR PRESENTATION PURPOSES ONLY, THEREFORE IMAGE SHOWN MAY VARY SLIGHTLY FROM FINISHED ACTUAL PART. DRAWING SHOWN IS TO INDICATE GENERAL ARRANGEMENT AND DESIGN.

1.0

COPY
DIOCESE OF CHARLESTON
ARCHIVES

C1930's

BEAUFORT COUNTY

COPY
DIOCESE OF CHARLESTON
ARCHIVES

1. St Peter,Beaufort. Rectory

In this the rectory:

Lot of land and building thereon.Formerly owned by Mrs Mollie Markey Bishop and sold to Wt Russell by Lengnick.

BSP.

Two lots on Carteret St., "number three and four in Block number forty three."

Date: Dec 22,1922 Cost: $2,500.00

2. Port Royal Land

Bought by Lynch for $175.00. "Lots number 37,38,39 and 40 in Block number 95" in Port Royal, Mar 15,1881.

SOLD.

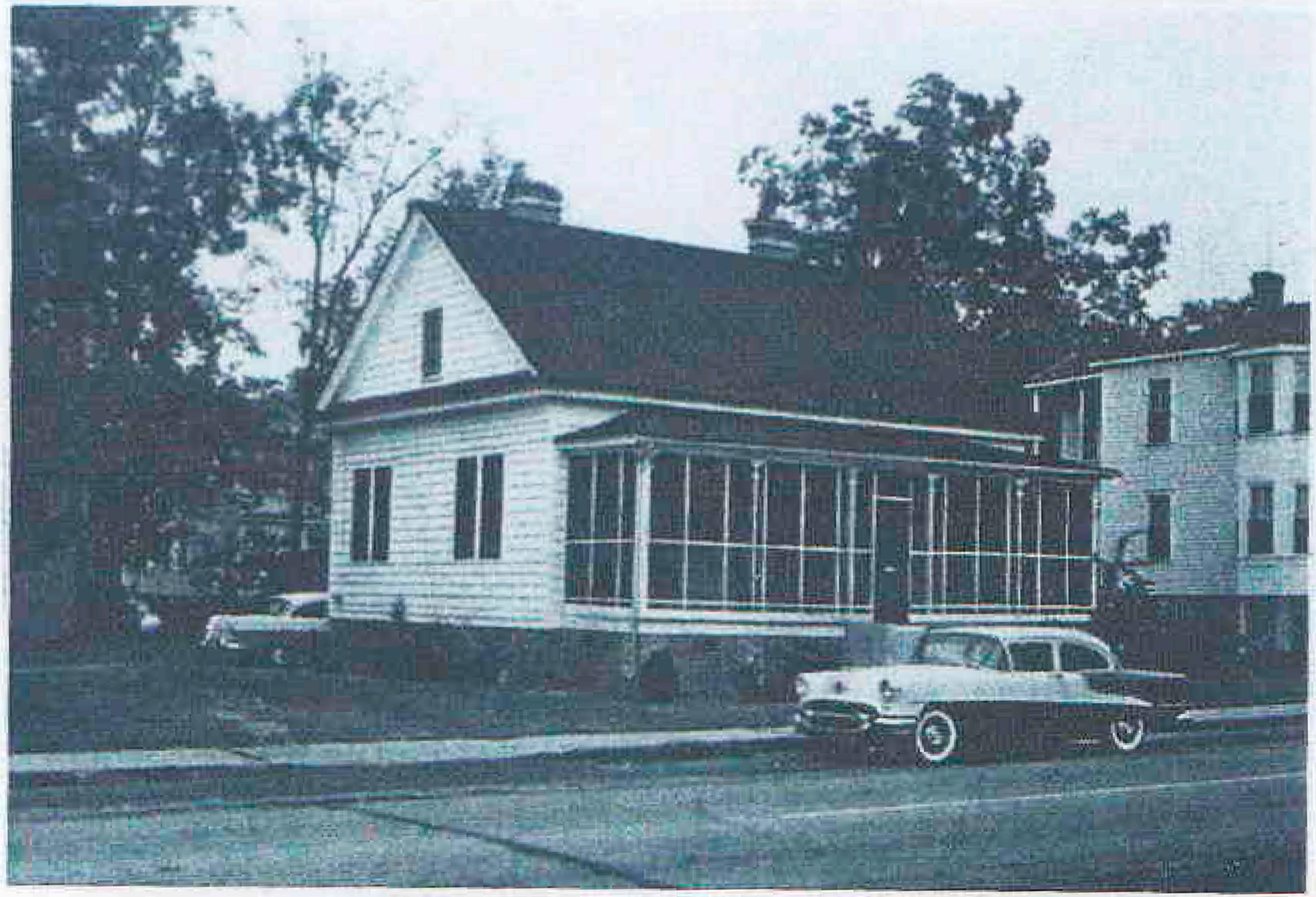

1950s

804 CARTERET STREET
EAST ELEVATION

1979

Business & Finance

APRIL 24, 1995

A section of THE TAMPA TRIBUNE

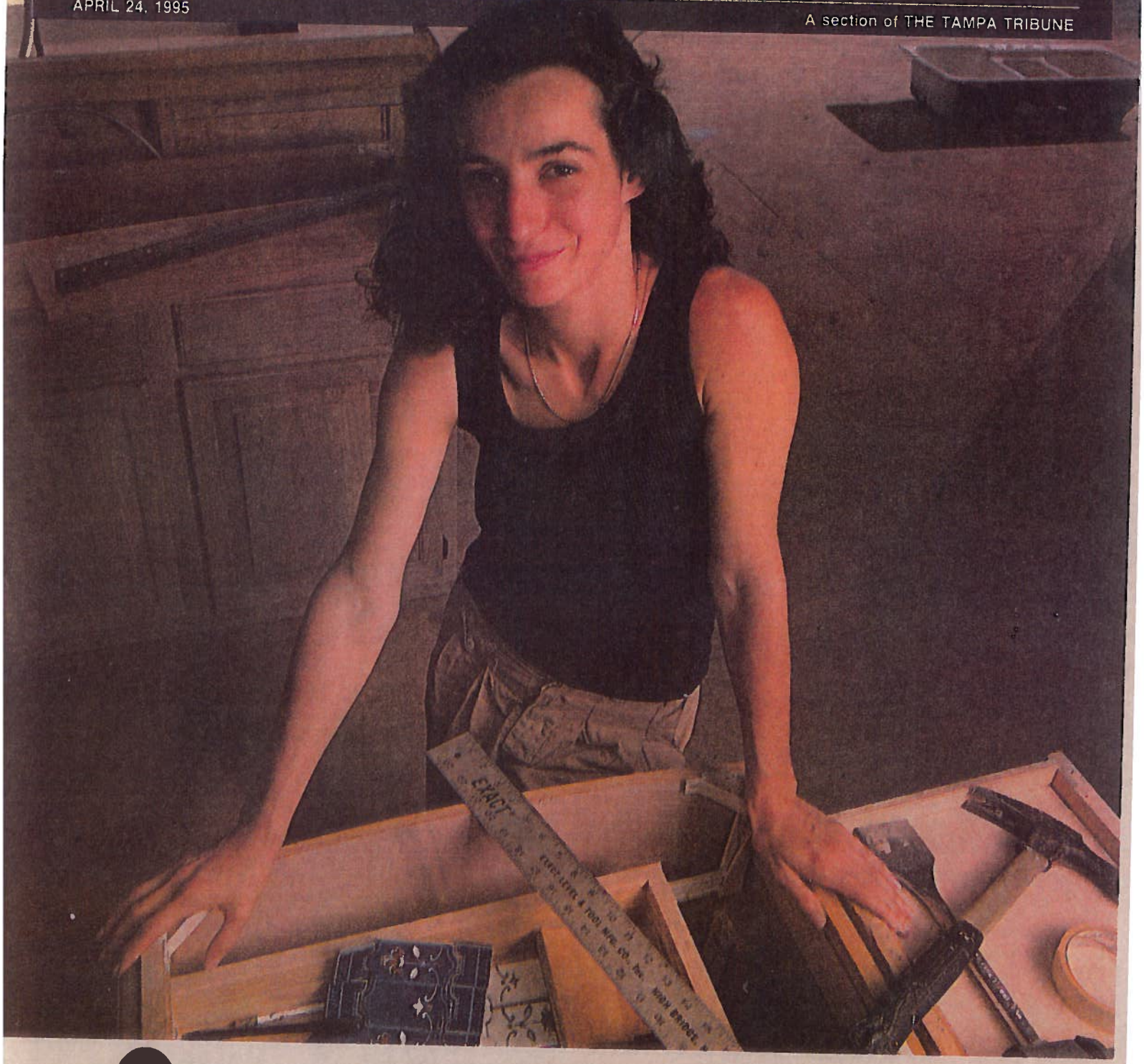

Changing the channel

Planners and landowners envision a Channel District of restaurants, shops, tourist attractions, single-family homes and industrial facilities near a waterfront bustling with cruise ships and tourists.

Page 10

CEIVED
APR 25 2014
for 5/14/14

Changing the channel

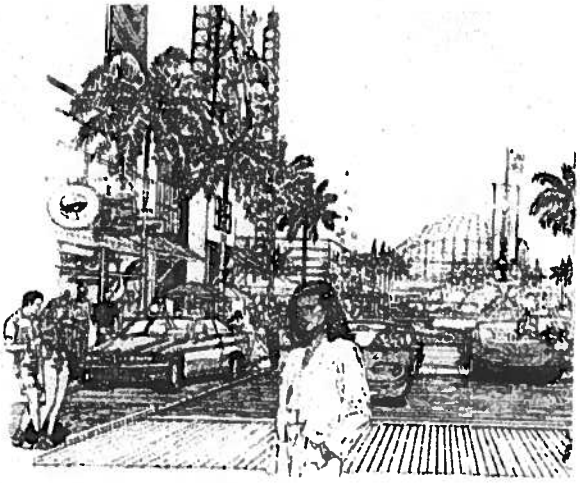

Planners and landowners hope a mix of restaurants, shops, tourist attractions, single-family homes and industrial facilities will invigorate the Channel District.

By JEAN GRUSS
Tribune Staff Writer

TAMPA

Luisa Meshekoff is an urban pioneer.

The professional ballerina and transplant from New York City is one of a handful of people who chose to live in the Channel District beside the industrial users that have operated for years in the shadows of Tampa's skyscrapers.

The idea of moving into a neighborhood crowded with trucks, tight streets, noisy industries and empty storage lots may not appeal to most people.

But Meshekoff is unfazed by the congestion and her industrial neighbors. Empty plastic barrels are piled high on one neighbor's lot, visitors have to skirt around delivery trucks and parking is a creative exercise.

"This is how I lived in New York," she said.

On the ground floor of the two-story building, the ballet dancer has plans for a nonprofit dance center and a metal-sculpting studio for her father. A vast, 8,000-square-foot loft apartment is planned for the second floor.

Meshekoff and others who follow her could turn the Channel District into an urban village like Ybor City and Hyde Park.

But planners and landowners say this community will have a distinctly different flavor. The vision for the area combines restaurants, shops, tourist attractions, single-family homes and industrial facilities near a waterfront bustling with cruise ships and tourists.

The Channel District is a study in contrasts.

Across Ybor Channel from the glass-enclosed Florida Aquarium, with its strong focus toward the natural environment, looms the rugged industrial port. The modern cruise terminal is not far from sun-baked warehouses and empty lots strewn with heavy equipment. Artists and professionals live next to noisy distribution facilities. Trucks rumble down palm-lined Channelside Drive.

"It's the variety of the contrasts that makes it so appealing and inviting," said Wilson Stair Jr., urban design manager for the city of Tampa. "Actually, the Channel District is an experiment for the city."

Traditional city planning involves segregating residential from industrial and commercial uses.

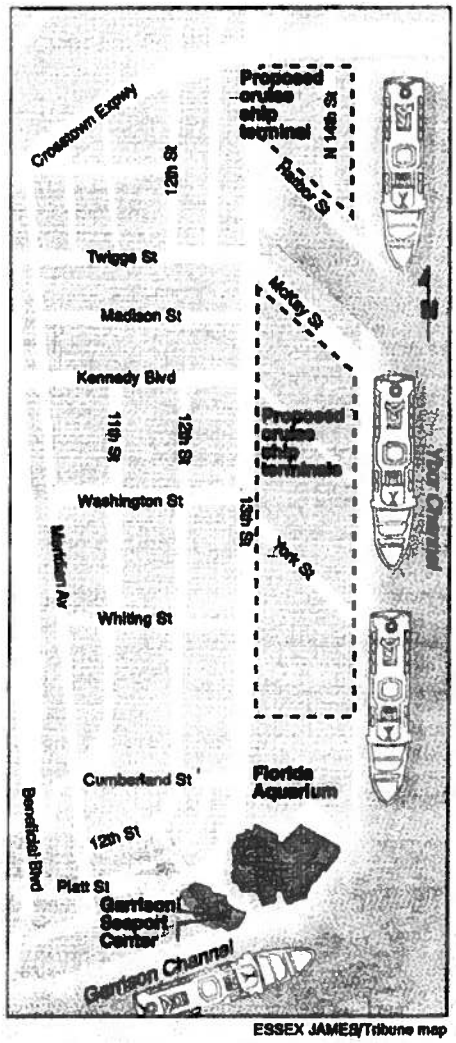

ESSEX JAMES/Tribune map

City planners envision a Channel District where industrial, commercial and residential uses intermingle.

The Channel District is a radical departure from that line of thinking.

To shape future development in the Channel District, the city developed a plan in 1993 and the Tampa City Council passed an accompanying ordinance in 1994 to allay the fears of traditional industrial users that they would be displaced by the changes.

Former city councilwoman Linda Saul-Sena led the city's efforts to plan for change in the Channel District when it became clear the Florida Aquarium would be located in the area.

"This was the most fantastic effort I ever participated in," Saul-Sena said. "It was really fun — no one wanted to kill each other."

Realizing that change in the area would be inevitable, Saul-Sena said her goal was to help preserve the industrial flavor of the district while accommodating other uses.

Industry was first

But companies that have operated in the area for years are anxious about change even though the city ordinance allows for them to expand and prosper in the Channel District.

And developers see some of the longtime property owners in the Channel District as stumbling blocks to tourism-oriented development because they won't leave or are asking outrageous sums of money to part with their properties.

"We were here first," said Lois Greenbaum, owner of Seaboard Cold Storage. The frozen-goods storage business has been in the Channel District for about 30 years.

"When they passed the ordinance . . . they promised that the industrial user would not be chased out of the area," Greenbaum said. "Everyone is looking and waiting."

She worries that the noise and traffic generated by her cold storage business won't appeal to future tourists and residents.

Greenbaum said she hasn't thought of moving her business and isn't planning on it. For one thing, her facility stores food for the fish at the aquarium.

"They promised everyone would get along," Greenbaum said. "We're crossing our fingers."

Amazon Hose and Rubber Co. is an industrial user that has operated a rubber hose distribution business in the Channel District since 1951.

"I'm perfectly content to stay here for the rest of my life," said Amazon Hose Vice President John Gorman.

But Gorman doubts industrial businesses in the Channel District can coexist with residential and retail users if the tourism-related waterfront is successful. That's because it would be difficult to move trucks in and out of the tight streets and arteries clogged with visitors.

"Long-range, it would not survive that way," Gorman said.

Artists' renditions of what the Channel District might look like in the future don't include any of the current industrial users. Instead, Gorman said, they show families strolling down clean, tree-lined streets.

"You see artists' renditions that are ridiculous," Gorman said.

However, Gorman said it will take several years to determine whether the residential,

804 CARTERET STREET
EAST ELEVATION

1979