THIS DOCUMENT AND ALL REPRODUCIBLE COPIES OF THIS DOCUMENT ARE THE PROPERTY OF WARD EDWARDS, INC. REPRODUCTION OR ALTERATIONS OF THIS DRAWING WITHOUT THE WRITTEN CONSENT OF WARD EDWARDS, INC. IS NOT PERMITTED.

SITE DEVELOPMENT PLANS
FOR

HANCOCK STREET
DRAINAGE IMPROVEMENTS
BEAUFORT COUNTY, SC

PREPARED FOR

CITY OF BEAUFORT

PROJECT NUMBER 130215E

PREPARED BY

Ward Edwards ENGINEERING
P.O. BOX 381, BLUFFTON, SOUTH CAROLINA 29910
PH (843) 837-5250 / FAX (843) 837-2558
WWW.WARDEDWARDS.COM

SOUTH CAROLINA — WARD EDWARDS, INC. No. C00152 — CERTIFICATE OF AUTHORIZATION

SOUTH CAROLINA PROFESSIONAL ENGINEER — 12/30/15 — No. 22816 — PAUL R. MOORE

VICINITY MAP (NOT TO SCALE)

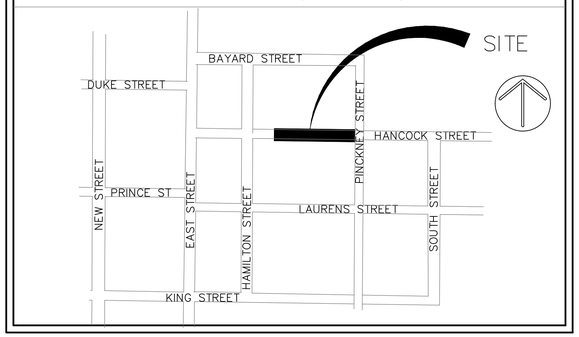

PROJECT DATA

DEVELOPER:	CITY OF BEAUFORT PUBLIC WORKS 16 BURTON HILL ROAD BEAUFORT, SC 29906
24 HOUR CONTACT:	LAMAR TAYLOR, OPERATIONS OFFICER
TELEPHONE:	(843) 525-7054
FAX:	(843) 525-7095
JURISDICTION:	BEAUFORT COUNTY, SC
TAX MAP #	
PROPERTY OWNER OF RECORD:	S-7-206 RIGHT-OF-WAY
NPDES DISTURBED AREA:	0.1 ACRES
APPROXIMATE LOCATION OF SITE:	HANCOCK ST. BETWEEN HAMILTON & PINCKNEY ST.
LONGITUDE:	W 80° 39' 59"
LATITUDE:	N 32° 26' 08"

☑ NOT FOR CONSTRUCTION
☐ RELEASED FOR CONSTRUCTION

SCHEDULE OF DRAWINGS

SHEET NO.	DESCRIPTION
C101	COVER SHEET (THIS SHEET)
C102	CONSTRUCTION NOTES
C103	EXISTING CONDITIONS PLAN
C104	DEMOLITION, DRAINAGE & PAVING PLAN
C105A-C	CONSTRUCTION DETAILS

RELEASE SCHEDULE

RELEASE NO.	DESCRIPTION	DATE
A.	RELEASED FOR PERMITTING	12/01/15
B.	RELEASED FOR BIDDING	12/30/15

SCDHEC-OCRM CERTIFICATION:
"I HAVE PLACED MY SIGNATURE AND SEAL ON THE DESIGN DOCUMENTS SUBMITTED SIGNIFYING THAT I ACCEPT RESPONSIBILITY FOR THE DESIGN OF THE SYSTEM. FURTHER, I CERTIFY TO THE BEST OF MY KNOWLEDGE AND BELIEF THAT THE DESIGN IS CONSISTENT WITH THE REQUIREMENTS OF TITLE 48, CHAPTER 14 OF THE CODE OF LAWS OF SC, 1976 AS AMENDED, PURSUANT TO REGULATION 72-300 ET SEQ. (IF APPLICABLE), AND IN ACCORDANCE WITH THE TERMS AND CONDITIONS OF SCR100000."

PROJECT #: 130215E
WARD EDWARDS, INC.
HANCOCK STREET DRAINAGE IMPROVEMENTS

O:\Data\Projects\130215E - Hancock Drainage\CAD Design Files\130215E_Master.dwg, 12/30/2015 4:52:28 PM, rtait

THIS DOCUMENT AND ALL REPRODUCIBLE COPIES OF THIS DOCUMENT ARE THE PROPERTY OF WARD EDWARDS, INC. REPRODUCTION OR ALTERATIONS OF THIS DRAWING WITHOUT THE WRITTEN CONSENT OF WARD EDWARDS, INC. IS NOT PERMITTED.

GENERAL NOTES:

1. BOUNDARY INFORMATION TAKEN FROM A TREE AND TOPO, FOR A PORTION OF HANCOCK STREET, CITY OF BEAUFORT, 6–24–14, BY BEAUFORT SURVEYING.
2. TOPOGRAPHIC DATA PROVIDED BY BEAUFORT SURVEYING, DATED 6–24–14.
3. APPROXIMATE LOCATION OF CERTAIN EXISTING UNDERGROUND UTILITY LINES AND STRUCTURES ARE SHOWN ON THE PLANS FOR INFORMATION ONLY ADDITIONAL UNDERGROUND LINES OR STRUCTURES MAY EXIST THAT ARE NOT SHOWN. CALL PALMETTO UTILITY PROTECTION SERVICE AT 1–888–721–7877 BETWEEN THE HOURS OF 7:00 AM AND 7:00 PM MONDAY THRU FRIDAY AT LEAST THREE WORKING DAYS BEFORE COMMENCING CONSTRUCTION. REQUEST UNDERGROUND UTILITIES TO BE LOCATED AND MARKED WITHIN AND NEAR THE CONSTRUCTION SITE.
4. COMPLY WITH SOUTH CAROLINA UNDERGROUND UTILITY DAMAGE PREVENTION ACT (S.C. CODE ANN, 58–35–10, CT–SEQ, SUPP. 1978). NOTIFICATION OF INTENT TO EXCAVATE MAY BE GIVEN BY CALLING THE TOLL FREE NUMBER: 1–800–922–0983.
5. PROTECT BENCH MARKS AND PROPERTY MONUMENTS FROM DAMAGE DURING CONSTRUCTION OPERATIONS. REPLACE ANY BENCH MARKS OR MONUMENTS DAMAGED OR DESTROYED AS A RESULT OF CONTRACTOR'S OPERATIONS AT NO COST TO THE OWNER.
6. OFF–STREET PARKING FOR THE CONTRACTOR'S EMPLOYEES AND AUTHORIZED VISITORS TO THE SITE MUST BE PROVIDED AND MAINTAINED THROUGHOUT CONSTRUCTION.
7. THE CONTRACTOR IS RESPONSIBLE FOR ADHERING TO WEIGHT LIMITS PRESCRIBED FOR ALL PUBLIC ROADS WHEN HAULING EQUIPMENT AND MATERIALS TO AND FROM THE PROJECT SITE. DAMAGES TO EXISTING PAVEMENT DUE TO THE CONTRACTOR'S CONSTRUCTION OPERATIONS OR IMPROPER TRANSPORTATION OF MATERIALS AND EQUIPMENT SHALL BE THE RESPONSIBILITY OF THE CONTRACTOR.
8. AT LEAST ONE DRIVING LANE ON PUBLIC ROADS SHALL REMAIN OPEN TO TRAFFIC AT ALL TIMES. TRAFFIC LANES WILL ONLY BE CLOSED WITH THE EXPRESS WRITTEN CONSENT OF THE AGENCY HAVING JURISDICTION OVER THE ROADWAY. NOTIFY AGENCY HAVING JURISDICTION AT LEAST 5 DAYS BEFORE CLOSING ANY DRIVING LANES TO TRAFFIC. PROVIDE TRAFFIC CONTROL DEVICES, SIGNS AND FLAGMEN AS REQUIRED TO ENSURE PUBLIC SAFETY.
9. CONTRACTOR SHALL COORDINATE DEMOLITION, CLEARING AND CONSTRUCTION OF IMPROVEMENTS TO MINIMIZE INTERFERENCE WITH VEHICULAR AND PEDESTRIAN TRAFFIC AND WITH OPERATIONS OF EXISTING FACILITIES.

WATER AND SEWER LINE CONSTRUCTION:

1. ALL WATER AND SEWER LINE CONSTRUCTION SHALL CONFORM TO APPLICABLE STATE AND BEAUFORT JASPER WATER AND SEWER AUTHORITY REQUIREMENTS, STANDARDS AND SPECIFICATIONS.
2. BJWSA WILL BE RESPONSIBLE FOR INSPECTION AND APPROVAL OF ALL WATER AND SEWER SYSTEM CONSTRUCTION AND FOR ACCEPTANCE FOR OPERATION AND MAINTENANCE.
3. ALL UTILITIES SHOWN ARE APPROXIMATE LOCATIONS. THE CONTRACTOR IS RESPONSIBLE FOR NOTIFICATION OF ALL UTILITY OWNERS AND FOR FIELD VERIFICATION OF BOTH HORIZONTAL AND VERTICAL LOCATIONS PRIOR TO COMMENCING CONSTRUCTION. ANY DAMAGES TO EXISTING UTILITIES DUE TO THIS CONSTRUCTION SHALL BE THE RESPONSIBILITY OF THE CONTRACTOR.
4. NOTIFY THE PROJECT ENGINEER, IF CONFLICTS WITH EXISTING STRUCTURES REQUIRE THAT PROPOSED UTILITIES BE RELOCATED.
5. THE CONTRACTOR MUST NOTIFY BJWSA FORTY–EIGHT (48) HOURS PRIOR TO ANY CONSTRUCTION, INSPECTION OR TESTING OF THE WATER DISTRIBUTION SYSTEM.
6. PIPE, FITTINGS, VALVES AND APPURTENANCES FOR WATER AND SEWER LINES SHALL ALL BE IN ACCORDANCE WITH THE REQUIREMENTS CONTAINED IN THE BEAUFORT–JASPER WATER AND SEWER AUTHORITY TECHNICAL SPECIFICATIONS.
7. INSTALLATION OF WATER AND SEWER LINES AND APPURTENANCES SHALL BE IN ACCORDANCE WITH THE BEAUFORT–JASPER WATER AND SEWER AUTHORITY STANDARD CONSTRUCTION DETAILS AND SPECIFICATIONS.
8. CONTRACTOR SHALL INSTALL MECHANICAL RESTRAINTS ON ALL BENDS, PLUGS AND TEES, 2" OR LARGER, ON WATERLINES AND SANITARY SEWER FORCE MAINS.
9. ALL WATER MAINS SHALL BE STERILIZED AND PRESSURE TESTED IN ACCORDANCE WITH BJWSA SPECIFICATIONS.
10. SEPARATION OF WATER MAINS AND SEWERS:
    a. PARALLEL INSTALLATION: UNLESS OTHERWISE SPECIFICALLY SHOWN IN A SPECIAL DETAIL ON THE PLANS, INSTALL WATER MAINS AT LEAST 10–FT. HORIZONTALLY FROM ANY EXISTING OR PROPOSED SANITARY SEWER OR SANITARY SEWER FORCE MAIN, THE DISTANCE BEING MEASURED IN A HORIZONTAL PLANE BETWEEN THE OUTSIDE SURFACES OF THE PIPES.
    b. CROSSINGS: UNLESS OTHERWISE SPECIFICALLY SHOWN IN A SPECIAL DETAIL ON THE PLANS, INSTALL WATER LINES CROSSING SANITARY SEWERS OR SANITARY SEWER FORCE MAINS TO PROVIDE A MINIMUM VERTICAL SEPARATION OF 18–INCHES BETWEEN THE OUTSIDE SURFACES OF THE PIPES. THIS SHALL BE THE CASE WHETHER THE WATER LINE IS ABOVE OR BELOW THE SANITARY SEWER LINE. WHENEVER POSSIBLE LOCATE THE WATER LINE ABOVE THE SEWER LINE. WHERE A NEW WATER LINE CROSSES A NEW SEWER LINE, PLACE A FULL LENGTH OF DUCTILE IRON PIPE FOR BOTH THE WATER AND THE SEWER LINE AT THE CROSSING WITH BOTH PIPES POSITIONED SO THAT THE JOINTS ON EACH ARE AS FAR AS POSSIBLE FROM THE POINT OF CROSSING. WHERE A NEW WATER LINE CROSSES AN EXISTING SEWER LINE, PLACE ONE FULL LENGTH OF DUCTILE IRON PIPE WATER LINE SO THAT THE JOINTS ARE AS FAR FROM THE POINT OF CROSSING AS POSSIBLE.
11. THE CONTRACTOR SHALL CUT AND PATCH EXISTING PAVEMENT AS REQUIRED FOR THE INSTALLATION OF UTILITY LINES.
12. SANITARY MANHOLE RIM GRADES SHOWN ARE APPROXIMATE. ADJUST RIM ELEVATIONS TO BE FLUSH WITH FINISHED GRADE.
13. THE CONTRACTOR UNDER THIS CONTRACT SHALL NOT MAKE ANY CONNECTIONS TO THE EXISTING WATER OR SANITARY SEWER SYSTEMS UNLESS EXPRESSLY AUTHORIZED TO DO SO BY THE BEAUFORT–JASPER WATER AND SEWER AUTHORITY. ALL WATER AND SEWER IMPROVEMENTS UNDER THIS CONTRACT MUST BE CONSTRUCTED COMPLETE, TESTED, INSPECTED AND APPROVED BY THE BEAUFORT–JASPER WATER AND SEWER AUTHORITY BEFORE ANY AUTHORIZATION TO CONNECT WILL BE GIVEN. COORDINATION OF TESTING, INSPECTION AND CONNECTIONS WITH THE BEAUFORT–JASPER WATER AND SEWER AUTHORITY IS THE RESPONSIBILITY OF THE CONTRACTOR UNDER THIS CONTRACT.
14. ALL WATER MAINS SHALL BE INSTALLED WITH THIRTY–SIX INCHES (36") MINIMUM COVER (FROM FINISHED GRADE). MAXIMUM DEPTH SHALL BE FIVE FEET (5'). WHERE WATER MAINS MAY CONFLICT WITH OTHER UTILITIES, THE WATER MAIN CROSSING SHALL BE CONSTRUCTED WITH DUCTILE IRON PIPE, MECHANICAL JOINT 45–DEG. BENDS AND MECHANICAL RESTRAINTS.

SITE CLEARING AND DEMOLITION:

1. NO CLEARING SHALL OCCUR WITHIN DESIGNATED BUFFER ZONES, TREE PROTECTION ZONES, OUTSIDE OF THE PROPERTY LINES OR BEYOND THE CLEARING LIMITS UNLESS OTHERWISE SPECIFICALLY SHOWN ON THE PLANS.
2. ONLY THOSE TREES DESIGNATED ON THE DRAWINGS FOR REMOVAL ARE TO BE REMOVED AS PART OF THE SITE CLEARING OPERATIONS.
3. THE CONTRACTOR SHALL INSTALL A CONTINUOUS LINE OF FLAGGING OR FENCING ALONG THE LIMITS OF CLEARING PRIOR TO COMMENCING ANY CLEARING, DEMOLITION OR CONSTRUCTION WORK ON THE PROJECT.
4. EXERCISE CAUTION DURING CLEARING OPERATIONS TO AVOID FELLING TREES INTO DESIGNATED TREE PROTECTION ZONES.
5. NO BURNING WILL BE ALLOWED WITHIN 50 FEET OF A TREE PROTECTION ZONE OR TREE DRIP LINE.
6. SELECTIVE CLEARING AREAS SHALL BE CLEARED OF ALL BRUSH AND UNDERSTORY GROWTH.

TREE PROTECTION–BEAUFORT

1. ALL TREES HAVING A TRUNK DIAMETER OF 8–INCHES (dbh) OR LARGER, AND SPECIMEN TREES MUST BE PRESERVED UNLESS SPECIFICALLY APPROVED FOR REMOVAL IN ACCORDANCE WITH THE CITY OF BEAUFORT ZONING AND DEVELOPMENT STANDARDS ORDINANCE AND INDICATED ON THE PLANS TO BE REMOVED.
2. PRIOR TO COMMENCING ANY CLEARING OR CONSTRUCTION OPERATIONS ON THE SITE, THE CONTRACTOR SHALL ERECT TREE PROTECTION BARRIERS AROUND EACH TREE OR GROUP OF TREES DESIGNATED FOR PRESERVATION IN ACCORDANCE WITH THE DETAILS ON THE PLANS AND THE REQUIREMENTS CONTAINED IN ARTICLE 7, SECTION 7.3, PAR. D.3 OF THE CITY OF BEAUFORT, SOUTH CAROLINA UNIFIED DEVELOPMENT ORDINANCE.
3. A TREE PROTECTION ZONE SHALL BE ESTABLISHED IN ACCORDANCE WITH THE PROVISIONS CONTAINED IN ARTICLE 7, SECTION 7.3, PAR. D.3 OF THE CITY OF BEAUFORT, SOUTH CAROLINA UNIFIED DEVELOPMENT ORDINANCE FOR EACH EXISTING TREE OR GROUPING OF TREES DESIGNATED FOR PRESERVATION. THE MINIMUM TREE PROTECTION ZONE AS DEFINED IN THE ORDINANCE IS A CIRCULAR AREA CENTERED ON THE TREE AND HAVING A RADIUS OF THE GREATER OF 5–FT. OR ONE–HALF FOOT PER INCH dbh (DIAMETER AT BREAST HEIGHT). THE SIZE OR CONFIGURATION OF THE TREE PROTECTION ZONE MAY BE ADJUSTED AT THE DISCRETION OF THE CITY'S ADMINISTRATOR OF THE ORDINANCE.
    A PLACEMENT OR STORAGE OF ANY SOIL, DEBRIS, OILS, FUEL, PAINTS, BUILDING MATERIALS OR ANY OTHER MATERIALS.
    B BURNING
    C VEHICLE PARKING
    D PAVING
    E TRENCHING FOR UTILITIES
4. WHERE UTILITY LINES MUST PASS THRU THE TREE PROTECTION ZONE, THEY SHALL BE INSTALLED BY HORIZONTAL BORING BENEATH THE ROOTS OF THE TREE.
5. WHERE IT IS NECESSARY FOR MACHINERY AND EQUIPMENT TO PASS WITHIN THE TREE PROTECTION ZONE, APPROVAL MUST BE OBTAINED FROM THE ZONING AND DEVELOPMENT ADMINISTRATOR. SPECIAL MEASURES WILL BE REQUIRED TO PROTECT THE ROOTS FROM EXCESSIVE COMPACTION.
6. THE CONTRACTOR IS RESPONSIBLE FOR OBTAINING ALL TREE REMOVAL PERMITS AND FOR COORDINATING ALL INSPECTIONS REQUIRED BY BEAUFORT COUNTY IN CONNECTION WITH TREE PRESERVATION AND REMOVAL ACTIVITIES. DURING CONSTRUCTION.

SITE GRADING AND DRAINAGE:

1. ALL UTILITIES SHOWN ARE APPROXIMATE LOCATIONS. THE CONTRACTOR SHALL BE RESPONSIBLE FOR PROVIDING 72–HOUR NOTICE TO ALL RESPECTIVE UTILITY COMPANIES FOR FIELD VERIFICATION OF EXISTING UTILITIES PRIOR TO CONSTRUCTION. ANY DAMAGES TO EXISTING UTILITIES DUE TO THIS CONSTRUCTION SHALL BE THE RESPONSIBILITY OF THE CONTRACTOR.
2. TEMPORARY CONTROL OF STORM WATER DRAINAGE SHALL BE THE RESPONSIBILITY OF THE CONTRACTOR. SEQUENCING AND CONSTRUCTION TECHNIQUES SHALL PREVENT OBSTRUCTION OF STORM SEWERS, PONDING IN TRAFFIC AREAS OR RISING OF WATER LEVELS WHICH WOULD ENTER ADJACENT BUILDINGS OR STRUCTURES.
3. FULL WIDTH OF STREET AND ROAD RIGHTS–OF–WAY MUST BE CLEARED AND GRADED AS SHOWN IN THE DETAILS ON THE DRAWINGS
4. SUBGRADE PREPARATION: TOP SOIL SHALL BE REMOVED FROM PAVED AREAS TO A MINIMUM DEPTH OF 4". ALL EXCAVATION SHALL BE TO SUBGRADE LIMITS.
5. ALL UTILITY PIPE LINES, CONDUITS AND SLEEVES UNDER PAVED AREAS MUST BE IN PLACE PRIOR TO COMPLETION OF THE ROADWAY SUBGRADE COMPACTION.
6. FINISH GRADING SHALL INCLUDE THE PLACEMENT OF TOPSOIL OVER ALL UNPAVED AREAS NOT OCCUPIED BY BUILDINGS OR STRUCTURES AND FINE GRADING AROUND BUILDINGS, ADJACENT TO WALKS, CURBS, GUTTERS AND STRUCTURES TO ASSURE POSITIVE DRAINAGE.

SCDHEC/OCRM SEDIMENT AND EROSION CONTROL STANDARD NOTES (REVISED DEC–2012):

1. IF NECESSARY, SLOPES, WHICH EXCEED EIGHT (8) VERTICAL FEET SHOULD BE STABILIZED WITH SYNTHETIC OR VEGETATIVE MATS, IN ADDITION TO HYDROSEEDING. IT MAY BE NECESSARY TO INSTALL TEMPORARY SLOPE DRAINS DURING CONSTRUCTION. TEMPORARY BERMS MAY BE NEEDED UNTIL THE SLOPE IS BROUGHT TO GRADE.
2. STABILIZATION MEASURES SHALL BE INITIATED AS SOON AS PRACTICABLE IN PORTIONS OF THE SITE WHERE CONSTRUCTION ACTIVITIES HAVE TEMPORARILY OR PERMANENTLY CEASED, BUT IN NO CASE MORE THAN FOURTEEN (14) DAYS AFTER WORK HAS CEASED, EXCEPT AS STATED BELOW.
    - WHERE STABILIZATION BY THE 14TH DAY IS PRECLUDED BY SNOW COVER OR FROZEN GROUND CONDITIONS STABILIZATION MEASURES MUST BE INITIATED AS SOON AS PRACTICABLE.
    - WHERE CONSTRUCTION ACTIVITY ON A PORTION OF THE SITE IS TEMPORARILY CEASED, AND EARTH–DISTURBING ACTIVITIES WILL BE RESUMED WITHIN 14 DAYS, TEMPORARY STABILIZATION MEASURES DO NOT HAVE TO BE INITIATED ON THAT PORTION OF THE SITE.
3. ALL SEDIMENT AND EROSION CONTROL DEVICES SHALL BE INSPECTED ONCE EVERY CALENDAR WEEK. IF PERIODIC INSPECTION OR OTHER INFORMATION INDICATES THAT A BMP HAS BEEN INAPPROPRIATELY, OR INCORRECTLY INSTALLED, THE PERMITTEE MUST ADDRESS THE NECESSARY REPLACEMENT OR MODIFICATION REQUIRED TO CORRECT THE BMP WITHIN 48 HOURS OF IDENTIFICATION.
4. PROVIDE SILT FENCE AND/OR OTHER CONTROL DEVICES, AS MAY BE REQUIRED, TO CONTROL SOIL EROSION DURING UTILITY CONSTRUCTION. ALL DISTURBED AREAS SHALL BE CLEANED, GRADED, AND STABILIZED WITH GRASSING IMMEDIATELY AFTER THE UTILITY INSTALLATION. FILL, COVER, AND TEMPORARY SEEDING AT THE END OF EACH DAY ARE RECOMMENDED. IF WATER IS ENCOUNTERED WHILE TRENCHING, THE WATER SHOULD BE FILTERED TO REMOVE SEDIMENT BEFORE BEING PUMPED BACK INTO ANY WATERS OF THE STATE.
5. ALL EROSION CONTROL DEVICES SHALL BE PROPERLY MAINTAINED DURING ALL PHASES OF CONSTRUCTION UNTIL THE COMPLETION OF ALL CONSTRUCTION ACTIVITIES AND ALL DISTURBED AREAS HAVE BEEN STABILIZED. ADDITIONAL CONTROL DEVICES MAY BE REQUIRED DURING CONSTRUCTION IN ORDER TO CONTROL EROSION AND/OR OFFSITE SEDIMENTATION. ALL TEMPORARY CONTROL DEVICES SHALL BE REMOVED ONCE CONSTRUCTION IS COMPLETE AND THE SITE IS STABILIZED.
6. THE CONTRACTOR MUST TAKE NECESSARY ACTION TO MINIMIZE THE TRACKING OF MUD ONTO PAVED ROADWAY(S) FROM CONSTRUCTION AREAS AND THE GENERATION OF DUST. THE CONTRACTOR SHALL DAILY REMOVE MUD/SOIL FROM PAVEMENT, AS MAY BE REQUIRED.
7. RESIDENTIAL SUBDIVISIONS REQUIRE EROSION CONTROL FEATURES FOR INFRASTRUCTURE AS WELL AS FOR INDIVIDUAL LOT CONSTRUCTION. INDIVIDUAL PROPERTY OWNERS SHALL FOLLOW THESE PLANS DURING CONSTRUCTION OR OBTAIN APPROVAL OF AN INDIVIDUAL PLAN IN ACCORDANCE WITH S.C REG. 72–300 ET SEQ. AND SCR100000.
8. TEMPORARY DIVERSION BERMS AND/OR DITCHES WILL BE PROVIDED AS NEEDED DURING CONSTRUCTION TO PROTECT WORK AREAS FROM UPSLOPE RUNOFF AND/OR TO DIVERT SEDIMENT–LADEN WATER TO APPROPRIATE TRAPS OR STABLE OUTLETS.
9. ALL WATERS OF THE STATE (WOS), INCLUDING WETLANDS, ARE TO BE FLAGGED OR OTHERWISE CLEARLY MARKED IN THE FIELD. A DOUBLE ROW OF SILT FENCE IS TO BE INSTALLED IN ALL AREAS WHERE A 50–FOOT BUFFER CAN'T BE MAINTAINED BETWEEN THE DISTURBED AREA AND ALL WOS. A 10–FOOT BUFFER SHOULD BE MAINTAINED BETWEEN THE LAST ROW OF SILT FENCE AND ALL WOS.
10. LITTER, CONSTRUCTION DEBRIS, OILS, FUELS, AND BUILDING PRODUCTS WITH SIGNIFICANT POTENTIAL FOR IMPACT (SUCH AS STOCKPILES OF FRESHLY TREATED LUMBER) AND CONSTRUCTION CHEMICALS THAT COULD BE EXPOSED TO STORM WATER MUST BE PREVENTED FROM BECOMING A POLLUTANT SOURCE IN STORM WATER DISCHARGES.
11. A COPY OF THE SWPPP, INSPECTIONS RECORDS, AND RAINFALL DATA MUST BE RETAINED AT THE CONSTRUCTION SITE OR A NEARBY LOCATION EASILY ACCESSIBLE DURING NORMAL BUSINESS HOURS, FROM THE DATE OF COMMENCEMENT OF CONSTRUCTION ACTIVITIES TO THE DATE THAT FINAL STABILIZATION IS REACHED.
12. INITIATE STABILIZATION MEASURES ON ANY EXPOSED STEEP SLOPE (3H:1V OR GREATER) WHERE LAND–DISTURBING ACTIVITIES HAVE PERMANENTLY OR TEMPORARILY CEASED, AND WILL NOT RESUME FOR A PERIOD OF 7 CALENDAR DAYS.
13. MINIMIZE SOIL COMPACTION AND, UNLESS INFEASIBLE, PRESERVE TOPSOIL.
14. MINIMIZE THE DISCHARGE OF POLLUTANTS FROM EQUIPMENT AND VEHICLE WASHING, WHEEL WASH WATER, AND OTHER WASH WATERS. WASH WATERS MUST BE TREATED IN A SEDIMENT BASIN OR ALTERNATIVE CONTROL THAT PROVIDES EQUIVALENT OR BETTER TREATMENT PRIOR TO DISCHARGE;
15. MINIMIZE THE DISCHARGE OF POLLUTANTS FROM DEWATERING OF TRENCHES AND EXCAVATED AREAS. THESE DISCHARGES ARE TO BE ROUTED THROUGH APPROPRIATE BMPS (SEDIMENT BASIN, FILTER BAG, ETC.).
16. THE FOLLOWING DISCHARGES FROM SITES ARE PROHIBITED:
    - WASTEWATER FROM WASHOUT OF CONCRETE, UNLESS MANAGED BY AN APPROPRIATE CONTROL;
    - WASTEWATER FROM WASHOUT AND CLEANOUT OF STUCCO, PAINT, FORM RELEASE OILS, CURING COMPOUNDS AND OTHER CONSTRUCTION MATERIALS;
    - FUELS, OILS, OR OTHER POLLUTANTS USED IN VEHICLE AND EQUIPMENT OPERATION AND MAINTENANCE; AND
    - SOAPS OR SOLVENTS USED IN VEHICLE AND EQUIPMENT WASHING.
17. AFTER CONSTRUCTION ACTIVITIES BEGIN, INSPECTIONS MUST BE CONDUCTED AT A MINIMUM OF AT LEAST ONCE EVERY CALENDAR WEEK AND MUST BE CONDUCTED UNTIL FINAL STABILIZATION IS REACHED ON ALL AREAS OF THE CONSTRUCTION SITE.
18. IF EXISTING BMPS NEED TO BE MODIFIED OR IF ADDITIONAL BMPS ARE NECESSARY TO COMPLY WITH THE REQUIREMENTS OF THIS PERMIT AND/OR SC'S WATER QUALITY STANDARDS, IMPLEMENTATION MUST BE COMPLETED BEFORE THE NEXT STORM EVENT WHENEVER PRACTICABLE. IF IMPLEMENTATION BEFORE THE NEXT STORM EVENT IS IMPRACTICABLE, THE SITUATION MUST BE DOCUMENTED IN THE SWPPP AND ALTERNATIVE BMPS MUST BE IMPLEMENTED AS SOON AS REASONABLY POSSIBLE.
19. A PRE–CONSTRUCTION CONFERENCE MUST BE HELD FOR EACH CONSTRUCTION SITE WITH AN APPROVED ON–SITE SWPPP PRIOR TO THE IMPLEMENTATION OF CONSTRUCTION ACTIVITIES. FOR NON–LINEAR PROJECTS THAT DISTURB 10 ACRES OR MORE THIS CONFERENCE MUST BE HELD ON–SITE UNLESS THE DEPARTMENT HAS APPROVED OTHERWISE.

WORK ON SOUTH CAROLINA DEPARTMENT OF TRANSPORTATION RIGHT–OF–WAY:

1. COMPLY WITH ALL SPECIAL PROVISIONS CONTAINED IN THE DEPARTMENT OF TRANSPORTATION ENCROACHMENT PERMIT ISSUED FOR THE WORK.
2. THE CONTRACTOR IS RESPONSIBLE FOR NOTIFICATION AND COORDINATION OF ALL WORK ON DOT RIGHTS–OF–WAY WITH THE DISTRICT ENGINEERING REPRESENTATIVE.
3. THE CONTRACTOR IS RESPONSIBLE FOR PROVIDING A DOT APPROVED TRAFFIC CONTROL PLAN FOR SITE ACCESS AND FOR CONSTRUCTION ON DEPARTMENT OF TRANSPORTATION RIGHTS–OF–WAY. ALL TRAFFIC CONTROL PROVISIONS MUST COMPLY WITH DEPARTMENT OF TRANSPORTATION MINIMUM REQUIREMENTS. LIGHTS, SIGNS, FLAGMEN AND ALL OTHER TRAFFIC CONTROL DEVICES MUST CONFORM TO THE REQUIREMENTS CONTAINED IN THE MANUAL ON UNIFORM TRAFFIC CONTROL DEVICES.
4. PROVIDE ALL REGULATORY SIGNS, PAVEMENT STRIPING AND MARKINGS, AS REQUIRED BY THE SOUTH CAROLINA DOT DISTRICT ENGINEERING INSPECTOR. ALL SIGNS MUST CONFORM TO THE REQUIREMENTS CONTAINED IN THE MANUAL ON UNIFORM TRAFFIC CONTROL DEVICES AND TO THE SOUTH CAROLINA DOT STANDARD DETAILS WITH RESPECT TO COLOR, SIZE, REFLECTIVITY, HEIGHT AND PLACEMENT.
5. ALL PAVEMENT MARKINGS ON DOT RIGHTS–OF–WAY SHALL BE THERMOPLASTIC (125 MIL THICKNESS) AND MUST COMPLY WITH THE REQUIREMENTS IN THE MANUAL ON UNIFORM TRAFFIC CONTROL DEVICES. PLACEMENT SHALL BE IN ACCORDANCE WITH SOUTH CAROLINA DOT STANDARD DRAWINGS 603–3 AND 603–4, AS APPLICABLE.
6. ALL PAVEMENT MARKINGS TO BE REMOVED MUST BE ERADICATED BY GRINDING.

DRY UTILITY CONDUITS FOR ELECTRIC, TELEPHONE AND CABLE TV:

1. ALL DRY UTILITY CONDUIT ENDS SHALL BE CAPPED AND MARKED WITH A STEEL REBAR STAKE IMBEDDED ONE (1) FOOT BELOW GROUND SURFACE.
2. 48" MINIMUM DEPTH FOR ALL ELECTRICAL CONDUITS.
3. MAINTAIN MINIMUM 12" VERTICAL CLEARANCE WHEN CROSSING WATER, SEWER, AND STORM DRAIN LINES.
4. MAINTAIN MINIMUM 18" HORIZONTAL CLEARANCE WHEN PARALLELING WATER, SEWER AND STORM DRAIN LINES.
5. EXTEND CONDUIT BEYOND PAVEMENT, CURB, AND SIDEWALKS.
6. THE CONTRACTOR SHALL BE RESPONSIBLE FOR COORDINATION OF THE INSTALLATION OF ALL UTILITY SERVICE CONNECTIONS. REFER TO APPROVED BUILDING PLANS FOR THE EXACT LOCATION OF ALL SERVICE CONNECTIONS. THE CONTRACTOR MUST INSTALL ALL CONDUITS, AS SHOWN ON THE PLANS OR AS REQUIRED BY RESPECTIVE UTILITY COMPANIES. THE CONTRACTOR SHALL BE RESPONSIBLE TO ENSURE STRICT COMPLIANCE WITH ALL APPLICABLE CODES AND REGULATIONS WITH REGARDS TO THE INSTALLATION OF UTILITIES AND CONDUIT.
7. LOCATIONS SHOWN ON THE PLANS FOR PROPOSED DRY UTILITY CONDUITS ARE APPROXIMATE ONLY. ALL DIMENSIONING AND STAKING SHOULD BE BASED ON ECONOMICAL AND PRACTICAL CONSTRUCTION. THE CONTRACTOR SHALL BE RESPONSIBLE FOR COORDINATION WITH THE RESPECTIVE UTILITY REPRESENTATIVES, PRIOR TO ANY CONDUIT INSTALLATION.
8. TRANSFORMER PADS SHALL BE LOCATED AS DIRECTED BY THE RESPECTIVE UTILITY REPRESENTATIVE. THE CONTRACTOR SHALL BE RESPONSIBLE FOR COMPLIANCE WITH APPLICABLE CODE REQUIREMENTS.
9. NOTIFY THE ENGINEER IF CONFLICTS WITH EXISTING OR PROPOSED STRUCTURES REQUIRE THAT PROPOSED UTILITIES BE RELOCATED.

LEGEND

DESCRIPTION	EXISTING	PROPOSED

LINETYPES:

DESCRIPTION	EXISTING	PROPOSED
CENTERLINE		
CONTOUR LINE	15	15
CURB & GUTTER (standard)		
CURB & GUTTER (roll curb)		
DITCH CENTERLINE		
DRAIN LINE	SD	SD
EASEMENT		
FORCE MAIN	FM	FM
PAVEMENT		
PROPERTY LINE		
SEWER LINE	SS	SS
WATER LINE	W	WL

TYPICAL SYMBOLS:

DESCRIPTION	EXISTING	PROPOSED
TREE	9 P	
TREE TO BE REMOVED		9 P
TREE PROTECTION		9 P
SPOT ELEVATION	X15.0	FG:15.0
TOP OF PAVING	X15.0	TP:15.00
TOP OF CURB	X15.0	TC:15.00
TOP OF WALK	X15.0	TW:15.00
DIRECTION OF FLOW		

STRUCTURE SYMBOLS:

DESCRIPTION	EXISTING	PROPOSED
WEIR INLET		SDWI: A1
CATCH BASIN		SDCB: A1
CURB INLET		SDCI: A1
CURB INLET (WITH GRATE)		SDCI: A1
STORM DRAIN JUNCTION BOX	D	SDJB: A1
STORM DRAIN MANHOLE		SDMH: A1
STORM GRATE INLET		SDGI: A1
SANITARY SEWER MANHOLE	S	SSMH: A1
SANITARY SEWER CLEANOUT		CO
SANITARY SEWER WYE		

WATER SYSTEM SYMBOLS:

DESCRIPTION	EXISTING	PROPOSED
WATER METER		
WATER VALVE		WV
REDUCER		
POST INDICATOR VALVE		
FIRE HYDRANT		
BLOWOFF HYDRANT		
YARD HYDRANT		
FIRE DEPART. CONNECT. (FDC)		
CAP		
PLUG		

MATERIAL SYMBOLS:

DESCRIPTION	EXISTING	PROPOSED
PROPOSED DEMOLITION		
PROPOSED SIDEWALK/ CONCRETE		
EXISTING WETLANDS		
PROPOSED AGGREGATE/ STONES		
PROPOSED ASPHALT (STANDARD ASPHALT)		
PROPOSED ASPHALT (HEAVY DUTY)		
PERVIOUS PAVERS		

EROSION & SEDIMENT CONTROL LEGEND

DESCRIPTION	SYMBOL

EROSION PREVENTION

DESCRIPTION	SYMBOL
LAND GRADING:	LG OR
SURFACE ROUGHENING:	
TOPSOILING:	
TEMPORARY SEEDING:	TS
MULCHING:	M
ECB OR TRM:	
FGM:	FGM
BFM:	BFM
PERMANENT SEEDING:	PS
SODDING:	SO
RIPRAP:	
OUTLET PROTECTION:	RIPRAP / ECB or TRM
DUST CONTROL:	DC
POLYACRYLAMIDE (PAM):	PAM

SEDIMENT CONTROL

DESCRIPTION	SYMBOL
SEDIMENT BASIN:	
TEMPORARY SEDIMENT TRAP:	
ROCK SEDIMENT DIKE:	
ROCK CHECK DAM:	OR
SEDIMENT TUBE:	
SILT FENCE:	
REINFORCED SILT FENCE:	
TYPE A–FABRIC INLET PROTECTION:	A
TYPE A–SEDIMENT TUBE INLET PROTECTION:	A
TYPE B – WIRE MESH AND STONE DROP INLET PROTECTION:	B
TYPE C – BLOCK AND GRAVEL INLET PROTECTION:	C
TYPE D – RIGID INLET FILTERS:	D
TYPE E – SURFACE COURSE CURB INLET FILTER:	E
TYPE F – INLET TUBE:	F

RUNOFF CONVEYANCE MEASURES:

DESCRIPTION	SYMBOL
VEGETATED CHANNELS:	
RIPRAP–LINED CHANNELS:	
ECB OR TRM–LINED CHANNELS:	
PAVED CHANNELS:	PC PC PC
PIPE SLOPE DRAINS:	
TEMPORARY STREAM CROSSING:	
TEMPORARY DIVERSION DITCH OR SWALE:	TD TD
PERMANENT DIVERSION DITCH:	PD PD
DIVERSION DIKE OR BERM:	DD DB
LEVEL SPREADER:	
SUBSURFACE DRAIN:	SSD SSD

SEQUENCE OF CONSTRUCTION ACTIVITIES PROJECT PHASING

ESTIMATED START DATE: JAN 2016 ESTIMATED COMPLETION DATE: FEB 2016

ITEMS MUST OCCUR IN THE ORDER LISTED; ITEMS CANNOT OCCUR CONCURRENTLY UNLESS SPECIFICALLY NOTED.

1. RECEIVE NPDES COVERAGE FROM DHEC.
2. PRE–CONSTRUCTION MEETING (ON–SITE IF MORE THAN 10 DISTURBED & NON–LINEAR)
3. NOTIFY DHEC EQC REGIONAL OFFICE OR OCRM OFFICE 48 HOURS PRIOR TO BEGINNING LAND–DISTURBING ACTIVITIES.
4. INSTALLATION OF PERIMETER CONTROLS (E.G. SILT FENCE).
5. PAVEMENT DEMOLITION
6. INSTALLATION OF STORM DRAIN SYSTEM AND PLACEMENT OF INLET PROTECTION AS EACH INLET IS INSTALLED.
7. PAVEMENT RESURFACING
8. PERMANENT / FINAL STABILIZATION.
9. CLEAN–OUT OF INSTALLED AND EXISTING INLET BOXES.
10. REMOVAL OF TEMPORARY SEDIMENT & EROSION CONTROL MEASURES AFTER ENTIRE AREA DRAINING TO THE STRUCTURE IS FINALLY STABILIZED (THE DEPARTMENT RECOMMENDS THAT THE PROJECT OWNER / OPERATOR HAVE THE SWPPP PREPARER OR REGISTRATION EQUIVALENT APPROVE THE REMOVAL OF TEMPORARY STRUCTURES).
11. PERFORM AS–BUILT SURVEYS OF ALL DETENTION STRUCTURES AND SUBMIT TO DHEC OR MS4 FOR ACCEPTANCE.
12. SUBMIT NOTICE OF TERMINATION (NOT) TO DHEC AS APPROPRIATE.

NOTE: MAINTENANCE OF SEDIMENT AND EROSION CONTROL MEASURES MUST CONTINUE UNTIL THE SITE IS PERMANENTLY STABILIZED AND THE CONTROLS ARE REMOVED.

STANDARD ABBREVIATIONS

Ac	ACRE	MJ	MECHANICAL JOINT
ADT	AVERAGE DAILY TRAFFIC	N	NORTH
ASPH	ASPHALT	NBR	NORTH BOUND ROADWAY
BEG	BEGIN	NC	NORMAL CROWN
BL	BASELINE	NGVD	NATIONAL GEODETIC VERTICAL DATUM
BM	BENCHMARK	NIC	NOT IN CONTRACT
BOB	BOTTOM OF BANK	OD	OUTSIDE DIAMETER
BOTT	BOTTOM	OH	OVERHEAD
BRG	BEARING	OHP	OVERHEAD POWER
BT	BURIED TELEPHONE	PAVT	PAVEMENT
B/C	BACK OF CURB	PC	POINT OF CURVATURE
C	RATE OF CHANGE IN SLOPE	PCC	POINT OF COMPOUND CURVATURE
C & G	CURB AND GUTTER	PERF	PERFORATED
CATV	CABLE TELEVISION	PG	PROFILE GRADE
CB	CATCH BASIN	PGE	PROFILE GRADE ELEVATION
CI	CURB INLET	PGL	PROFILE GRADE LINE
CL	CLEARANCE OR CENTERLINE	PI	POINT OF INTERSECTION
CONST	CONSTRUCTION	PR	POINT OF ROTATION
CORR	CORRECTION	PRC	POINT OF REVERSE CURVATURE
CF	CUBIC FEET	PRCST	PRECAST
CY	CUBIC YARD	PT	POINT OF TANGENCY
DA	DRAINAGE AREA	PVC	POLYVINYL CHLORIDE
DBI	DITCH BOTTOM INLET	PVI	POINT OF VERTICAL INTERSECTION
DBL	DOUBLE	Q	PEAK DISCHARGE OR FLOW VOLUME (CFS)
DHV	DESIGN HOURLY VOLUME	R	RATE OF CHANGE IN ELEVATION
DI	DROP INLET	R OR RAD	RADIUS
DIA OR D	DIAMETER	RCP	REINFORCED CONCRETE PIPE
DIP	DUCTILE IRON PIPE	RDWY	ROADWAY
DT	DITCH	REQ OR REQD	REQUIRED
E	SUPERELEVATION	RT	RT
E	EAST OR EXTERNAL DISTANCE	R/W	RIGHT OF WAY
EGL	EXISTING GRADE LINE	S	SPEED OR SOUTH OR SLOPE
EL OR ELEV	ELEVATION	SAHM	SAND-ASPHALT HOT MIX
EMBK	EMBANKMENT	SAN	SANITARY
ENGR	ENGINEER	SF	SQUARE FOOT OR SILT FENCE
EQ	EQUAL	SY	SQUARE YARD
ESMT	EASEMENT	SBR	SOUTH BOUND ROADWAY
EW	ENDWALL	SD	STORM SEWER
EXIST	EXISTING	SED	SEDIMENT
F & I	FURNISH AND INSTALL	SHW	SEASONAL HIGH WATER
FES	FLARED END SECTION	SS	SANITARY SEWER
FH	FIRE HYDRANT	SSMH	SANITARY SEWER MANHOLE
FM	FORCE MAIN	STA	STATION
FT	FOOT OR FEET	SUBGR	SUBGRADE
FUT	FUTURE	SUR	SURVEY
GI	GRATE INLET	SW OR SWK	SIDEWALK
GRD	GRADE	TC	TOP OF CURB
H OR HT	HEIGHT	TCE	TEMPORARY CONSTRUCTION EASEMENT
HDPE	HIGH DENSITY POLYETHYLENE	TEL	TELEPHONE
HDWL	HEADWALL	TEMP	TEMPERATURE OR TEMPORARY
HORIZ	HORIZONTAL	TG	TOP OF GRATE
HP	HIGH POINT	TOB	TOP OF BANK
HW	HIGHWATER	TP	TOP OF PAVEMENT
HWY	HIGHWAY	TW	TOP OF SIDEWALK
HYD	HYDRANT OR HYDRAULIC	TYP	TYPICAL
ID	INSIDE DIAMETER	UNDDR	UNDERDRAIN
IE	INVERT ELEVATION	UG	UNDERGROUND
IN	INCH	UE	UNDERGROUND ELECTRIC
INSTL	INSTALL	UT	UNDERGROUND TELEPHONE
JB	JUNCTION BOX	UTIL	UTILITIES
LF	LINEAR FEET	VERT	VERTICAL
LGTH	LENGTH	W	WIDTH OR WEST
LOW	LIMIT OF WORK	WL	WATER LINE
LP	LOW POINT	WM	WATER MAIN
LT	LEFT	WT	WATER TABLE OR WEIGHT
MES	MITRED END SECTION	WV	WATER VALVE
MH	MANHOLE	WWF	WELDED WIRE FABRIC
MHW	MEAN HIGH WATER	YI	YARD INLET

South Carolina 811
Call 811 Before You Dig

SOUTH CAROLINA PROFESSIONAL ENGINEER No. 22816 LICENSED PAUL R. MOORE 12/30/15

SOUTH CAROLINA WARD EDWARDS, INC. No. C00152 CERTIFICATE OF AUTHORIZATION

NO.	DESCRIPTION	DATE
1		
2		
3		
4		
5		
6		
7		

PLAN REVISIONS

Ward Edwards ENGINEERING
P.O. BOX 381, BLUFFTON, SOUTH CAROLINA 29910
PH (843) 837-5250 / FAX (843) 837-2558
WWW.WARDEDWARDS.COM

HANCOCK STREET DRAINAGE IMPROVEMENTS
CITY OF BEAUFORT, SOUTH CAROLINA

PREPARED FOR THE CITY OF BEAUFORT
BEAUFORT, SOUTH CAROLINA

CONSTRUCTION NOTES

☑ NOT FOR CONSTRUCTION
☐ RELEASED FOR CONSTRUCTION

PROJECT #:	130215E
DATE:	12/30/15
DESIGNED BY:	PRM
CHECKED BY:	GAB
SCALE:	1"=60'

SHEET
C102

IF THIS SHEET IS LESS THAN 22" X 34" IT IS A REDUCED PRINT, SCALE ACCORDINGLY

O:\Data\Projects\130215E – Hancock Drainage\CAD Design Files\130215E_Master.dwg, 12/30/2015 4:52:31 PM, rbolt

THIS DOCUMENT AND ALL REPRODUCIBLE COPIES OF THIS DOCUMENT ARE THE PROPERTY OF WARD EDWARDS, INC. REPRODUCTION OR ALTERATIONS OF THIS DRAWING WITHOUT THE WRITTEN CONSENT OF WARD EDWARDS, INC. IS NOT PERMITTED.

0 10' 20' 40' 60'

SCALE 1" = 20'

JUNE 24, 2014

P15408/MMA

LEGEND:
PP – POWER POLE
LP – LIGHT POLE
SV – SEWER VALVE
SSMH – SEWER MANHOLE
SD – STORM DRAIN
WV – WATER VALVE
WM – WATER METER
TB – TELE BOX
SH – SPRINKLER HEAD
SGN – SIGN
FH – FIRE HYDRANT
LO – LIVE OAK
MAG – MAGNOLIA
PAL – PALMETTO

SOUTH CAROLINA BEAUFORT SURVEYING INC. No. 00189 CERTIFICATE OF AUTHORIZATION

I HEREBY STATE THAT TO THE BEST OF MY KNOWLEDGE, INFORMATION AND BELIEF, THE SURVEY SHOWN HEREON WAS MADE IN ACCORDANCE WITH THE REQUIREMENTS OF THE MINIMUM STANDARDS MANUAL FOR THE PRACTICE OF LAND SURVEYING IN SOUTH CAROLINA, AND MEETS OR EXCEEDS THE REQUIREMENTS FOR A CLASS B SURVEY AS SPECIFIED THEREIN.
ALSO THERE ARE NO VISIBLE ENCROACHMENTS OR PROJECTIONS OTHER THAN SHOWN.

DAVID S. YOUMANS RLS 9765
BEAUFORT SURVEYING, INC.
1613 PARIS AVENUE
PORT ROYAL, S.C. 29935
PHONE (843) 524-3261

AS-BUILT, TREE & TOPO SURVEY

PREPARED FOR

CITY OF BEAUFORT

PORTION OF HANCOCK STREET

BEAUFORT COUNTY, SOUTH CAROLINA

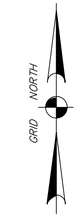

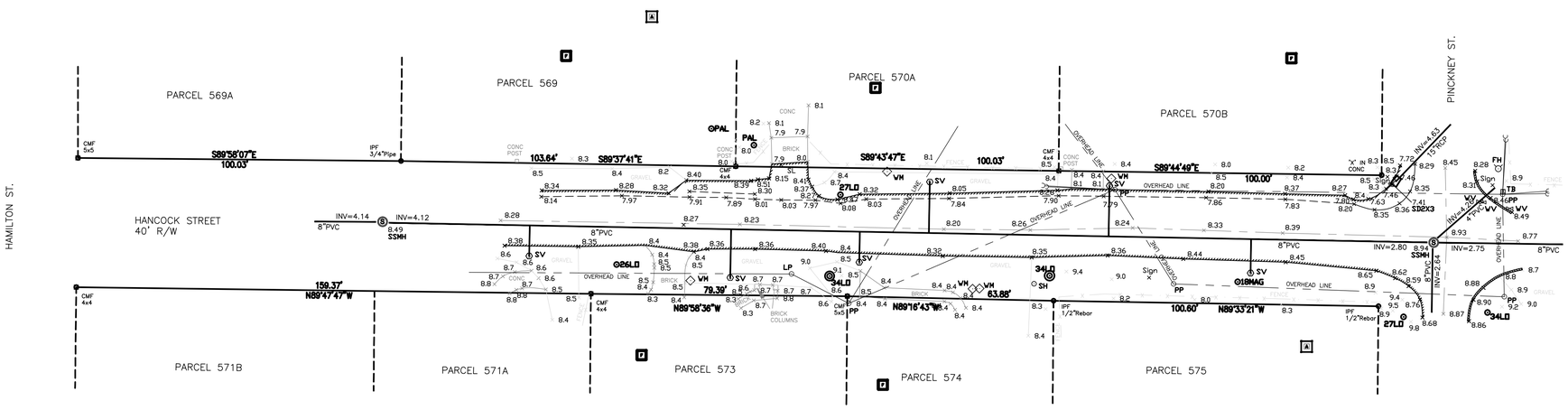

20 10 0 20 40

GRAPHIC SCALE

SOUTH CAROLINA PROFESSIONAL ENGINEER No. 22816 12/30/15 PAUL R. MOORE

SOUTH CAROLINA WARD EDWARDS, INC. No. C00152 CERTIFICATE OF AUTHORIZATION

NO.	DESCRIPTION	DATE
1		
2		
3		
4		
5		
6		
7		

PLAN REVISIONS

Ward Edwards ENGINEERING
P.O. BOX 381, BLUFFTON, SOUTH CAROLINA 29910
PH (843) 837-5250 / FAX (843) 837-2558
WWW.WARDEDWARDS.COM

HANCOCK STREET DRAINAGE IMPROVEMENTS

CITY OF BEAUFORT, SOUTH CAROLINA

PREPARED FOR THE CITY OF BEAUFORT
BEAUFORT, SOUTH CAROLINA

EXISTING CONDITIONS PLAN

☑ NOT FOR CONSTRUCTION
☐ RELEASED FOR CONSTRUCTION

PROJECT #:	130215E
DATE:	12/30/15
DESIGNED BY:	PRM
CHECKED BY:	GAB
SCALE:	1"=20'

SHEET
C103

IF THIS SHEET IS LESS THAN 22" X 34" IT IS A REDUCED PRINT, SCALE ACCORDINGLY

O:\Data\Projects\130215E - Hancock Drainage\CAD Design Files\130215E_Master.dwg, 12/30/2015 4:52:35 PM, rbolt

THIS DOCUMENT AND ALL REPRODUCIBLE COPIES OF THIS DOCUMENT ARE THE PROPERTY OF WARD EDWARDS, INC. REPRODUCTION OR ALTERATIONS OF THIS DRAWING WITHOUT THE WRITTEN CONSENT OF WARD EDWARDS, INC., IS NOT PERMITTED.

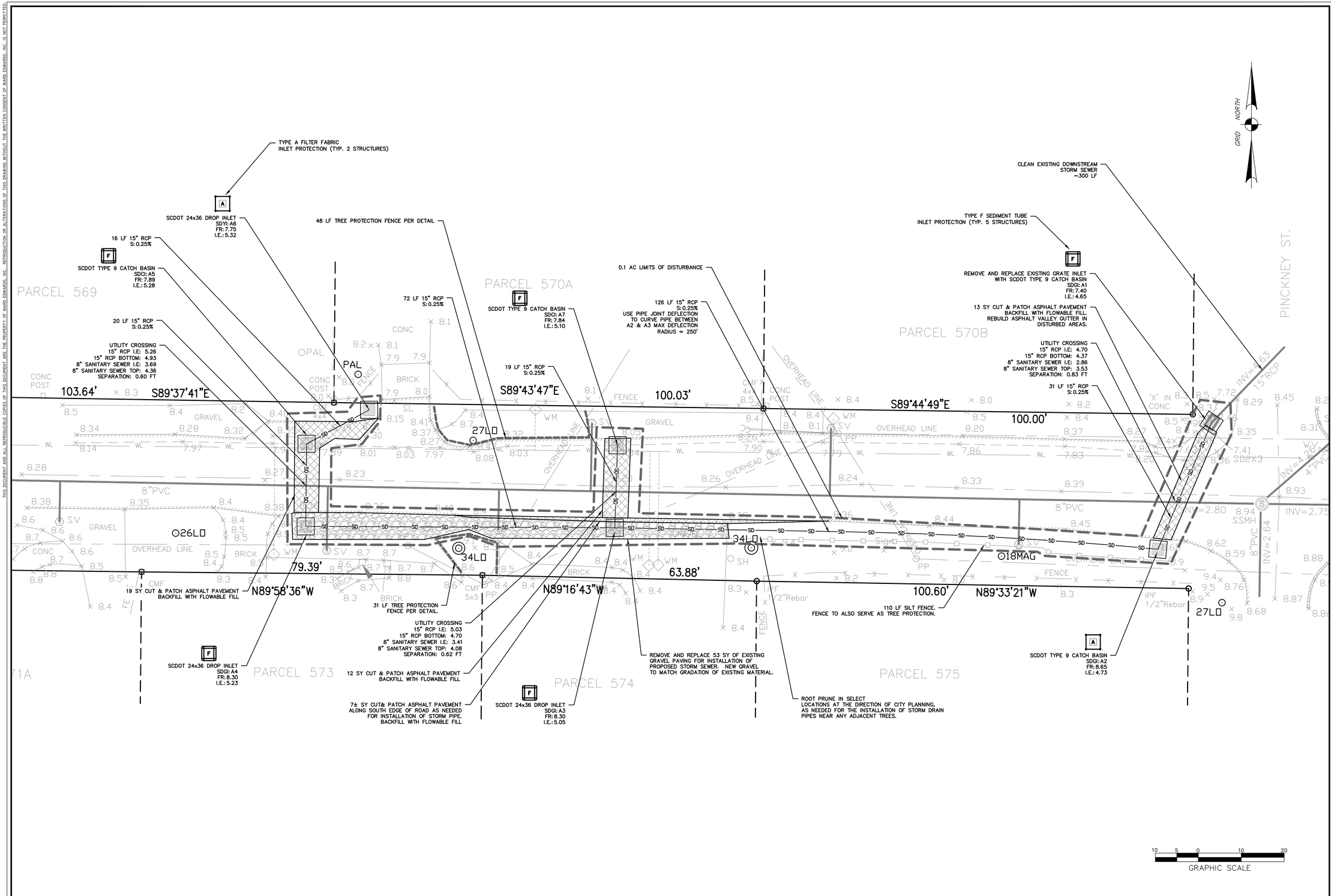

NO.	DESCRIPTION	DATE
1	PLAN REVISIONS	
2		
3		
4		
5		
6		
7		

Ward Edwards ENGINEERING
P.O. BOX 381, BLUFFTON, SOUTH CAROLINA 29910
PH (843) 837-5250 / FAX (843) 837-2558
WWW.WARDEDWARDS.COM

HANCOCK STREET DRAINAGE IMPROVEMENTS

CITY OF BEAUFORT, SOUTH CAROLINA

PREPARED FOR THE CITY OF BEAUFORT
BEAUFORT, SOUTH CAROLINA

DEMOLITION, DRAINAGE & PAVEMENT PLAN

☑ NOT FOR CONSTRUCTION
☐ RELEASED FOR CONSTRUCTION

PROJECT #:	130215E
DATE:	12/30/15
DESIGNED BY:	PRM
CHECKED BY:	GAB
SCALE:	1"=10'

SHEET
C104

IF THIS SHEET IS LESS THAN 22" X 34" IT IS A REDUCED PRINT, SCALE ACCORDINGLY

O:\Data\Projects\130215E - Hancock Drainage\CAD Design Files\130215E_Master.dwg, 12/30/2015 4:52:38 PM, mint

THIS DOCUMENT AND ALL REPRODUCIBLE COPIES OF THIS DOCUMENT ARE THE PROPERTY OF WARD EDWARDS, INC. REPRODUCTION OR ALTERATIONS OF THIS DRAWING WITHOUT THE WRITTEN CONSENT OF WARD EDWARDS, INC. IS NOT PERMITTED.

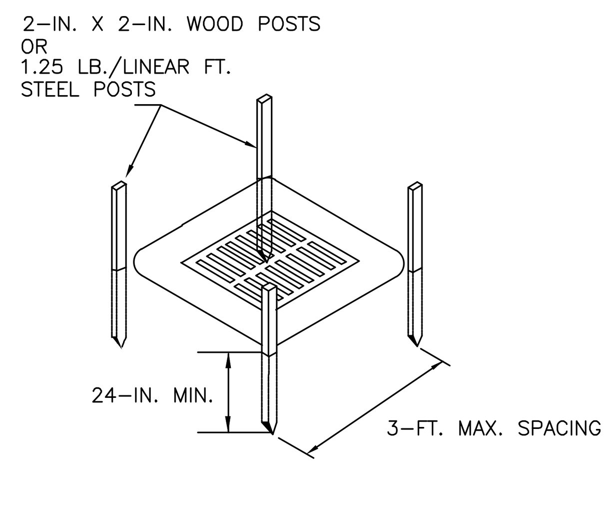

POST INSTALLATION DETAIL

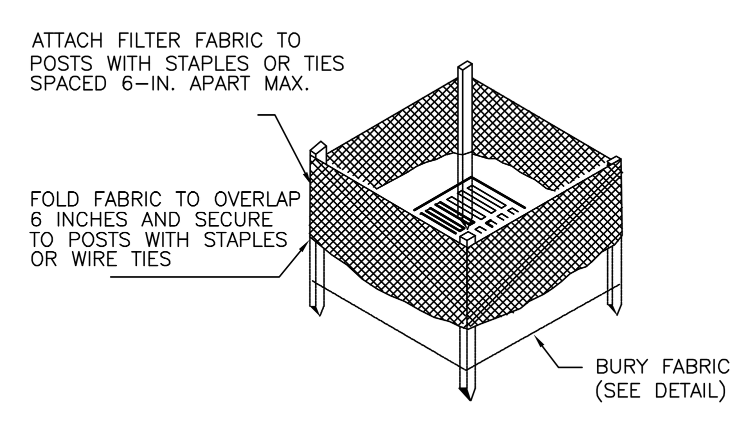

Sd2

FILTER FABRIC INSTALLATION DETAIL

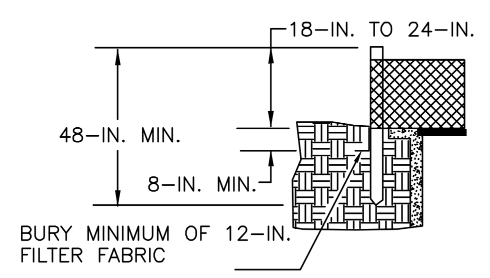

FILTER FABRIC BURIAL DETAIL

South Carolina Department of Health and Environmental Control

TYPE A – FILTER FABIC INLET PROTECTION

STANDARD DRAWING NO. SC-07 Page 1 of 2

APPROVED BY: SCDHEC AUGUST, 2005 DATE

FILTER FABRIC INLET PROTECTION

Materials:
Use filter fabric that conforms to SCDOT standard specifications for highway construction (latest edition). Refer to the silt fence geotextile fabrics Approval Sheet #34.

Use steel posts that meet the following minimum physical requirements:
Be composed of high strength steel with minimum yield strength of 50,000 psi.
Have a standard "T" section with a nominal face width of 1.38-inches and nominal "T" length of 1.48-inches.
Weigh 1.25 pounds per foot (± 8%).
Be painted with a water based baked enamel paint.

Attach fabric to metal posts with heavy-duty plastic ties.

Installation:
Excavate a trench 6-inches wide and 6-inches deep around the outside perimeter of the inlet unless the fabric is pneumatically installed.

Extend the filter fabric a minimum of 12-inches into the trench. Backfill the trench with soil or crushed stone and compact over the filter fabric unless the fabric is
pneumatically installed.

Use steel posts with a minimum post length of 60-inches consisting of standard "T" sections with a weight of 1.25 pounds per foot (±8%). Install the filter fabric to a minimum height of 24-inches above grade. Space the steel posts around the perimeter of the inlet a maximum of 3-feet apart and drive them into the ground a minimum of 24-inches. Cut the filter fabric from a continuous roll to the length of the protected area to avoid the use of joints. When joints are necessary, wrap filter fabric together only at a support post with both ends securely fastened to the post, with a minimum 6-inch overlap.

Attach fabric to steel posts with heavy-duty plastic ties.

Attach at least four (4) evenly spaced ties in a manner to prevent sagging or tearing of the fabric. In all cases, affix ties in no less than four (4) places.

Inspection and Maintenance:
Inspections should be made every 7 calendar days and within 24-hours after each storm that produces ½-inches or more of rain.If the fabric becomes clogged, it should be replaced.
Sediment should be removed when it reaches approximately 1/3 the height of the fence. Take care not to damage or undercut fabric when removing sediment.If a sump is used, sediment should be removed when it fills approximately 1/3 the depth of the hole.Maintain the pool area, always providing adequate sediment storage volume for the next storm.

Storm drain inlet protection structures should be removed only after the disturbed areas are permanently stabilized. Remove all construction material and sediment, and dispose of them properly. Grade the disturbed area to the elevation of the drop inlet structure crest. Use appropriate permanent stabilization methods to stabilize bare areas around the inlet.

South Carolina Department of Health and Environmental Control

Type A

FILTER FABIC INLET PROTECTION

STANDARD DRAWING NO. SC-07 Page 2 of 2

APPROVED BY: SCDHEC AUGUST, 2005 DATE

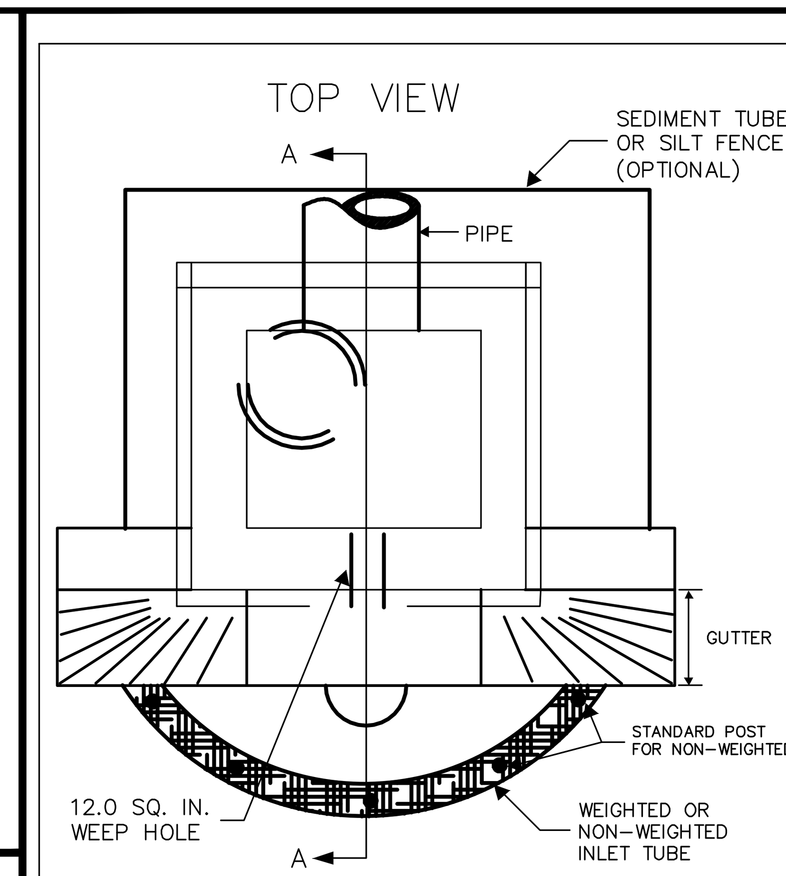

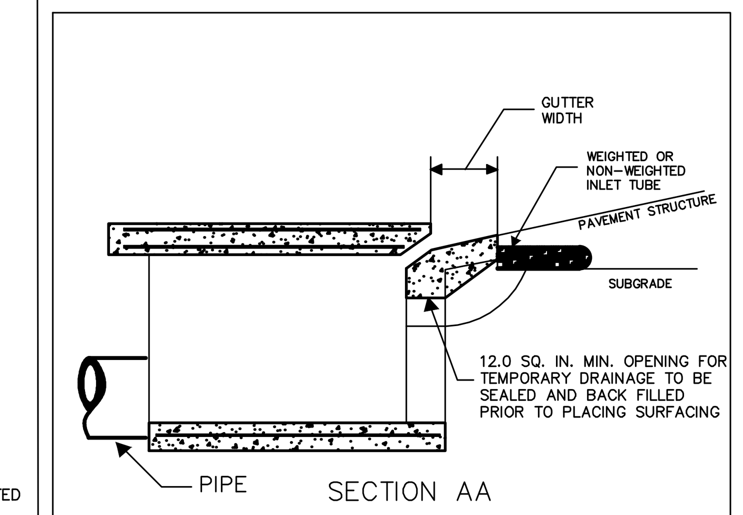

South Carolina Department of Health and Environmental Control

TYPE F INLET TUBES

STANDARD DRAWING NO. SC-11 Page 1 of 2

APPROVED BY: SCDHEC AUGUST, 2005 DATE

Type F Inlet Tubes

Materials
Use inlet tubes that exhibit the following properties:
Produced by a Manufacturer experienced in sediment tube manufacturing.
Composed of compacted geotextiles, curled excelsior wood, natural coconut fibers or hardwood mulch or a mix of these materials enclosed by a flexible netting material.
Do not use straw, straw fiber, straw bales, pine needles or leaf mulch under this specification.
Utilize an outer netting that consists of seamless, high-density polyethylene photodegradable materials treated with ultraviolet stabilizers or a seamless, high-density polyethylene non-degradable materials.Curled wood excelsior fiber, or natural coconut fiber rolled erosion control products (RECP) rolled up to create an inlet tube devices are not allowed under this specification.

Weighted Inlet Tubes
Weighted inlet tubes are sediment tubes capable of staying in place without external stabilization measures and may have a weighted inner core or other weighted mechanism to keep them in place.

Materials
Applicable Type F weighted inlet tubes may be selected from the SCDOT approved products list.

Installation:
Install weighted inlet tubes lying flat on the ground, with no gaps between the underlying surface and the inlet tube.
Never stack weighted inlet tubes on top of one another.

Do not completely block inlets with weighted inlet tubes.

Install weighted inlet tubes in such a manner that all overflow or overtopping water has the ability to enter the inlet unobstructed.

To avoid possible flooding, two or three concrete cinder blocks may be placed between the weighted inlet tubes and the inlet.

Non-Weighted Inlet Tubes
Non-weighted inlet tubes are defined as sediment tubes that require staking or other stabilization methods to keep them safely in place.

Materials
Applicable Type F non-weighted inlet tubes may be selected from the SCDOT approved products list.

Inspection and Maintenance:
Inlet tubes may be temporarily moved during construction as needed.
Replace inlet tubes damaged during installation as directed by the Inspector or Manufacturer's Representative at the contractor's expense.

South Carolina Department of Health and Environmental Control

TYPE F INLET TUBES

STANDARD DRAWING NO. SC-11 Page 2 of 2

APPROVED BY: SCDHEC AUGUST, 2005 DATE

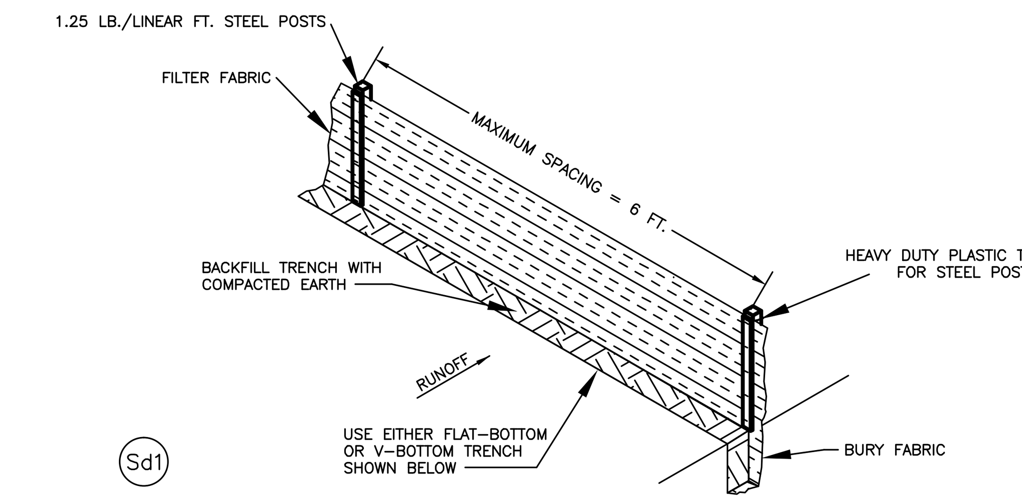

Sd1

SILT FENCE INSTALLATION

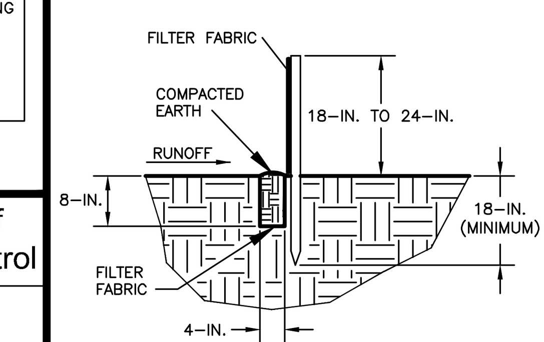

FLAT-BOTTOM TRENCH DETAIL

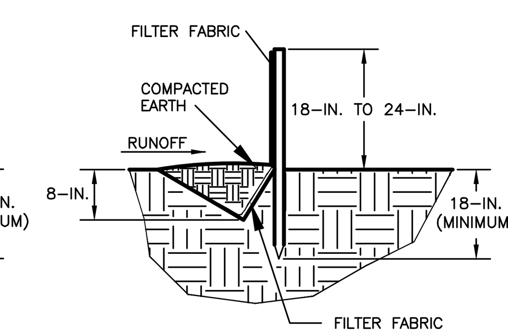

V-SHAPED TRENCH DETAIL

South Carolina Department of Health and Environmental Control

SILT FENCE

STANDARD DRAWING NO. SC-03 Page 1 of 3

APPROVED BY: SCDHEC AUGUST, 2005 DATE

SILT FENCE DETAIL

When and Where to Use it
Silt fence is applicable in areas:

Where the maximum sheet or overland flow path length to the fence is 100-feet.
Where the maximum slope steepness (normal [perpendicular] to fence line) is 2H:1V.
That do not receive concentrated flows greater than 0.5 cfs.

Do not place silt fence across channels or use it as a velocity control BMP.

Materials

Steel Posts
Use 48-inch long steel posts that meet the following minimum physical requirements:
Composed of high strength steel with minimum yield strength of 50,000 psi.
Have a standard "T" section with a nominal face width of 1.38-inches and nominal "T" length of 1.48-inches.
Weigh 1.25 pounds per foot (± 8%).
Have a soil stabilization plate with a minimum cross section area of 17-square inches attached to the steel posts.
Painted with a water based baked enamel paint.

Use steel posts with a minimum length of 4-feet, weighing 1.25 pounds per linear foot (± 8%) with projections to aid in fastening the fabric. Except when heavy clay soils are present on site, steel posts will have a metal soil stabilization plate welded near the bottom such that when the post is driven to the proper depth, the plate will be below the ground level for added stability.
The soil plates should have the following characteristics:
Be composed of minimum 15 gauge steel.
Have a minimum cross section area of 17-square inches.

Geotextile Filter Fabric
Filter fabric is:
Composed of fibers consisting of long chain synthetic polymers composed of at least 85% by weight of polyolefins, polyesters, or polyamides. Formed into a network such that the filaments or yarns retain dimensional stability relative to each other. Free of any treatment or coating which might adversely alter its physical properties after installation. Free of defects or flaws that significantly affect its physical and/or filtering properties. Cut to a minimum width of 36 inches.

Use only fabric appearing on SCDOT Approval Sheet #34 meeting the requirements of the most current edition of the SCDOT Standard Specifications for Highway Construction.

South Carolina Department of Health and Environmental Control

SILT FENCE

STANDARD DRAWING NO. SC-03 Page 2 of 3

APPROVED BY: SCDHEC AUGUST, 2005 DATE

SILT FENCE DETAIL

Installation
Excavate a trench approximately 6-inches wide and 6-inches deep when placing fabric by hand. Place 12-inches of geotextile fabric into the 6-inch deep trench, extending the remaining 6-inches towards the upslope side of the trench. Backfill the trench with soil or gravel and compact.Bury 12-inches of fabric into the ground when pneumatically installing silt fence with a slicing method. Purchase fabric in continuous rolls and cut to the length of the barrier to avoid joints. When joints are necessary, wrapped the fabric together at a support post with both ends fastened to the post, with a 6-inch minimum overlap. Install posts to a minimum depth of 24-inches. Install posts a minimum of 1- to 2- inches above the fabric, with no more than 3-feet of the post above the ground. Space posts to maximum 6-feet centers. Attach fabric to wood posts using staples made of heavy-duty wire at least 1½-inch long, spaced a maximum of 6-inches apart. Staple a 2-inch wide lathe over the filter fabric to securely fasten it to the upslope side of wooden posts. Attach fabric to the steel posts using heavy-duty plastic ties that are evenly spaced and placed in a manner to prevent sagging or tearing of the fabric. In call cases, ties should be affixed in no less than 4 places. Install the fabric a minimum of 24-inches above the ground. When necessary, the height of the fence above ground may be greater than 24-inches. In tidal areas, extra silt fence height may be required. The post height will be twice the exposed post height. Post spacing willremain the same and extra height fabric will be 4-, 5-, or 6-feet tall. Locate silt fence checks every 100 feet maximum and at low points. Install the fence perpendicular to the direction of flow and place the fence the proper distance from the toe of steep slopes to provide sediment storage and access for maintenance and cleanout.

Inspection and Maintenance
Inspect every seven calendar days and within 24-hours after each rainfall event that produces ½-inches or more of precipitation. Check for sediment buildup and fence integrity. Check where runoff has eroded a channel beneath the fence, or where the fence has sagged or collapsed by fence overtopping.
If the fence fabric tears, begins to decompose, or in any way becomes ineffective, replace the section of fence immediately.
Remove sediment accumulated along the fence when it reaches 1/3 the height of the fence, especially if heavy rains are expected.
Remove trapped sediment from the site or stabilize it on site.
Remove silt fence within 30 days after final stabilization is achieved or after temporary best management practices (BMPs) are no longer needed.
Permanently stabilize disturbed areas resulting from fence removal.

South Carolina Department of Health and Environmental Control

SILT FENCE

STANDARD DRAWING NO. SC-03 Page 3 of 3

APPROVED BY: SCDHEC AUGUST, 2005 DATE

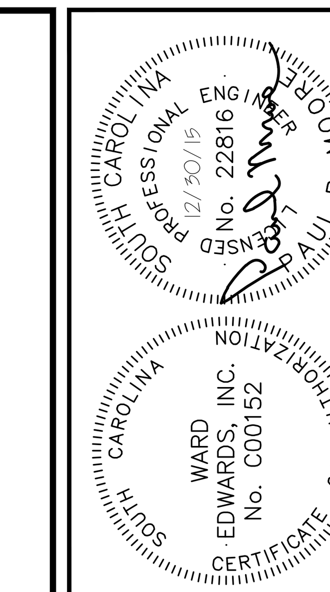

NO.	DESCRIPTION	DATE
1		
2		
3		
4		
5		
6		
7		

PLAN REVISIONS

Ward Edwards
ENGINEERING
P.O. BOX 381, BLUFFTON, SOUTH CAROLINA 29910
PH (843) 837-5250 / FAX (843) 837-2558
WWW.WARDEDWARDS.COM

HANCOCK STREET DRAINAGE IMPROVEMENTS
CITY OF BEAUFORT, SOUTH CAROLINA

PREPARED FOR THE CITY OF BEAUFORT
BEAUFORT, SOUTH CAROLINA

CONSTRUCTION DETAILS

☑ NOT FOR CONSTRUCTION
☐ RELEASED FOR CONSTRUCTION

PROJECT #:	130215E
DATE:	12/30/15
DESIGNED BY:	PRM
CHECKED BY:	GAB
SCALE:	AS NOTED

SHEET
C105A

IF THIS SHEET IS LESS THAN 22" X 34" IT IS A REDUCED PRINT, SCALE ACCORDINGLY

O:\Data\Projects\130215E – Hancock Drainage\CAD Design Files\130215E_Master.dwg, 12/30/2015 4:52:41 PM, rbolt

THIS DOCUMENT AND ALL REPRODUCIBLE COPIES OF THIS DOCUMENT ARE THE PROPERTY OF WARD EDWARDS, INC. REPRODUCTION OR ALTERATIONS OF THIS DRAWING WITHOUT THE WRITTEN CONSENT OF WARD EDWARDS, INC., IS NOT PERMITTED.

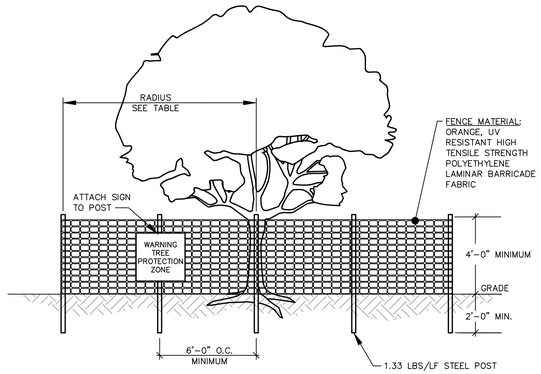

NOTES:
1. ALL TREES DESIGNATED TO BE SAVED SHALL BE PROTECTED BY FENCING.
2. INSTALL TREE PROTECTION FENCE TO RADIUS INDICATED IN TABLE UNLESS OTHERWISE INDICATED ON PLANS.
3. WARNING SIGNS TO BE MADE OF DURABLE WATERPROOF MATERIAL.
4. ALL WARNING SIGN LETTERS TO BE AT LEAST 3 INCHES HIGH, CLEARLY LEGIBLE AND SPACED A MINIMUM OF ONE EVERY 40 FT. FOR PROTECTION AREAS LESS THAN 40 FT IN PERIMETER, PROVIDE NO LESS THAN ONE SIGN PER SIDE.
5. THE SIZE OF EACH WARNING SIGN MUST BE A MINIMUM OF 2' x 2' AND BE VISIBLE FROM BOTH SIDES OF THE FENCE.
6. ATTACH SIGNS SECURELY TO FENCE POSTS AND FABRIC.
7. THERE SHALL BE NO STORAGE OF MATERIAL WITHIN THE BOUNDARIES OF THE TREE PROTECTION FENCING.
8. TREE PROTECTION FENCING SHALL BE MAINTAINED THROUGHOUT THE DURATION OF THE PROJECT. FENCING MUST REMAIN UPRIGHT AND SLACK FREE.

TABLE – RADIUS OF TREE PROTECTION ZONE (TPZ)	
JURISDICTION	RADIUS OF CIRCULAR TPZ
BEAUFORT COUNTY DSO 106-1846(b)(2)OR	1 FOOT PER INCH OF TRUNK DBH OR 5 FEET, WHICHEVER IS GREATER
TOWN OF BLUFFTON UDO 5.3.3, C(1)	1.5 FEET PER INCH OF TRUNK DBH
TOWN OF HILTON HEAD LMO 16-6-404	FENCING AT DRIP LINE FOR "SPECIMEN TREES", SEE PLANS FOR ALL OTHERS
CITY OF BEAUFORT UDO 7.3, D(3)	0.5 FOOT PER INCH OF TRUNK DBH OR 5 FEET, WHICHEVER IS GREATER
JASPER COUNTY ZONING ORD. ART. 13	FENCING AT DRIP LINE FOR "SIGNIFICANT" AND "LANDMARK" TREES
CITY OF HARDEEVILLE MZDSO 4.8, F	FENCING AT DRIP LINE FOR "PROTECTED TREES", SEE PLANS FOR ALL OTHERS

DBH = TRUNK DIAMETER AT BREAST HEIGHT

TREE PROTECTION FENCE

DETAIL #02915-008

CITY OF BEAUFORT (U.D.O. 7.3, D(3)

"A CIRCLE WITH A RADIUS OF ONE-HALF FOOT FOR EVERY INCH OF DBH OR FIVE FEET, WHICHEVER IS GREATER (THE CIRCLE OF PROTECTION MAY BE OFFSET AS MUCH AS TWO-THIRDS OF ITS TOTAL DIAMETER).

PERMANENT SEEDING – COASTAL

SPECIES	LBS/AC	JAN	FEB	MAR	APR	MAY	JUN	JUL	AUG	SEP	OCT	NOV	DEC
SANDY, DROUGHTY SITES													
BROWNTOP MILLET BAHIAGRASS	10 LBS/AC 40 LBS/AC			■	■	■	■	■	■				
BROWNTOP MILLET BAHIAGRASS SERICEA LESPEDEZA	10 LBS/AC 30 LBS/AC 40 LBS/AC			■	■	■	■	■	■				
BROWNTOP MILLET ATLANTIC COASTAL PANICGRASS	10 LBS/AC 15 LBS/AC PLS			■	■	■	■						
BROWNTOP MILLET SWITCHGRASS (ALAMO) LITTLE BLUESTEM SERICEA LESPEDEZA	10 LBS/AC 8 LBS/AC PLS 4 LBS/AC 20 LBS/AC			■	■	■	■						
BROWNTOP MILLET WEEPING LOVEGRASS	10 LBS/AC 8 LBS/AC			■	■	■	■						
WELL DRAINED, CLAYEY/LOAMEY SITES													
BROWNTOP MILLET BAHIAGRASS	10 LBS/AC 40 LBS/AC			■	■	■	■	■	■				
RYE, GRAIN BAHIAGRASS CLOVER, CRIMSON (ANNUAL)	10 LBS/AC 40 LBS/AC 5 LBS/AC									■	■		
BROWNTOP MILLET BAHIAGRASS SERICEA LESPEDEZA	10 LBS/AC 30 LBS/AC 40 LBS/AC			■	■	■	■	■	■				
BROWNTOP MILLET BERMUDA, COMMON SERICEA LESPEDEZA	10 LBS/AC 10 LBS/AC 40 LBS/AC			■	■	■	■	■	■				
BROWNTOP MILLET BERMUDA, COMMON KOBE LESPEDEZA (ANNUAL)	10 LBS/AC 12 LBS/AC 10 LBS/AC			■	■	■	■	■	■				
BROWNTOP MILLET BAHIAGRASS BERMUDA, COMMON SERICEA LESPEDEZA	10 LBS/AC 20 LBS/AC 6 LBS/AC 40 LBS/AC			■	■	■	■	■	■				
BROWNTOP MILLET SWITCHGRASS LITTLE BLUESTEM INDIANGRASS	10 LBS/AC 8 LBS/AC PLS 3 LBS/AC PLS 3 LBS/AC PLS			■	■	■	■	■	■				

PS PERMANENT SEEDING - COASTAL

DETAIL 02370-010

TEMPORARY SEEDING – COASTAL

SPECIES	LBS/AC	JAN	FEB	MAR	APR	MAY	JUN	JUL	AUG	SEP	OCT	NOV	DEC
SANDY, DROUGHTY SITES													
BROWNTOP MILLET	40 LBS/AC			■	■	■	■	■	■				
RYE, GRAIN	56 LBS/AC	■	■							■	■	■	■
RYEGRASS	50 LBS/AC	■	■	■						■	■	■	■
WELL DRAINED, CLAYEY/LOAMEY SITES													
BROWNTOP MILLET OR JAPANESE MILLET	40 LBS/AC			■	■	■	■	■	■				
RYE, GRAIN OR OATS	56 LBS/AC 75 LBS/AC	■	■							■	■	■	■
RYEGRASS	50 LBS/AC	■	■	■						■	■	■	■

TS TEMPORARY SEEDING - COASTAL

DETAIL 02370-011

SOUTH CAROLINA PROFESSIONAL ENGINEER No. 22816 12/30/15 REGISTERED
SOUTH CAROLINA WARD EDWARDS, INC. No. C00152 CERTIFICATE OF AUTHORIZATION

NO.	DESCRIPTION	DATE
	PLAN REVISIONS	
1		
2		
3		
4		
5		
6		
7		

Ward Edwards ENGINEERING
P.O. BOX 381, BLUFFTON, SOUTH CAROLINA 29910
PH (843) 837-5250 / FAX (843) 837-2558
WWW.WARDEDWARDS.COM

HANCOCK STREET DRAINAGE IMPROVEMENTS
CITY OF BEAUFORT, SOUTH CAROLINA.

PREPARED FOR THE CITY OF BEAUFORT
BEAUFORT, SOUTH CAROLINA

CONSTRUCTION DETAILS

☑ NOT FOR CONSTRUCTION
☐ RELEASED FOR CONSTRUCTION

PROJECT #:	13021SE
DATE:	12/30/15
DESIGNED BY:	PRM
CHECKED BY:	GAB
SCALE:	AS NOTED

SHEET
C105B

IF THIS SHEET IS LESS THAN 22" X 34" IT IS A REDUCED PRINT. SCALE ACCORDINGLY

O:\Data\Projects\13021SE - Hancock Drainage\CAD Design Files\13021SE_Master.dwg, 12/30/2015 4:52:45 PM, rtoll

THIS DOCUMENT AND ALL REPRODUCIBLE COPIES OF THIS DOCUMENT ARE THE PROPERTY OF WARD EDWARDS, INC. REPRODUCTION OR ALTERATIONS OF THIS DRAWING WITHOUT THE WRITTEN CONSENT OF WARD EDWARDS, INC. IS NOT PERMITTED.

O:\Data\Projects\130215E - Hancock Drainage\CAD Design Files\130215E_Master.dwg, 12/30/2015 4:52:49 PM, rbolt

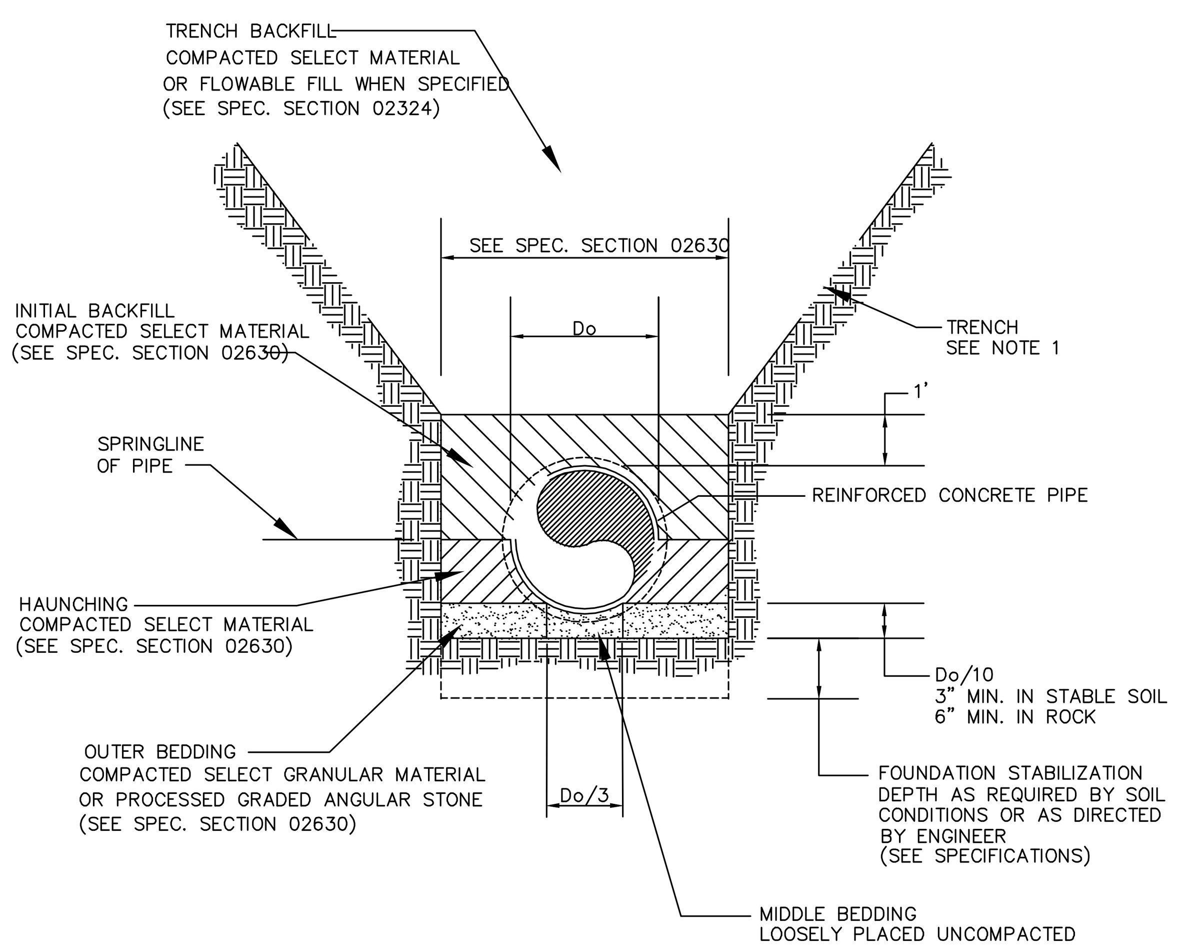

NOTES:

1: DEPTH OF VERTICAL TRENCH AND SIDE SLOPES OF TRENCH MAY VARY DEPENDING ON DEPTH OF EXCAVATION AND TRENCH PROTECTION SYSTEM USED. COMPLY WITH OSHA REGULATIONS (STANDARDS – 29 CFR) PART 1956 SUBPART P, EXCAVATIONS.

2. WHEN PROCESSED ANGULAR STONE IS USED FOR MIDDLE AND OUTER BEDDING, THE STONE SHALL BE COMPLETELY WRAPPED IN FILTER FABRIC TO PREVENT MIGRATION OF SURROUNDING SOILS.

EMBEDMENT DETAIL FOR REINFORCED CONCRETE PIPE

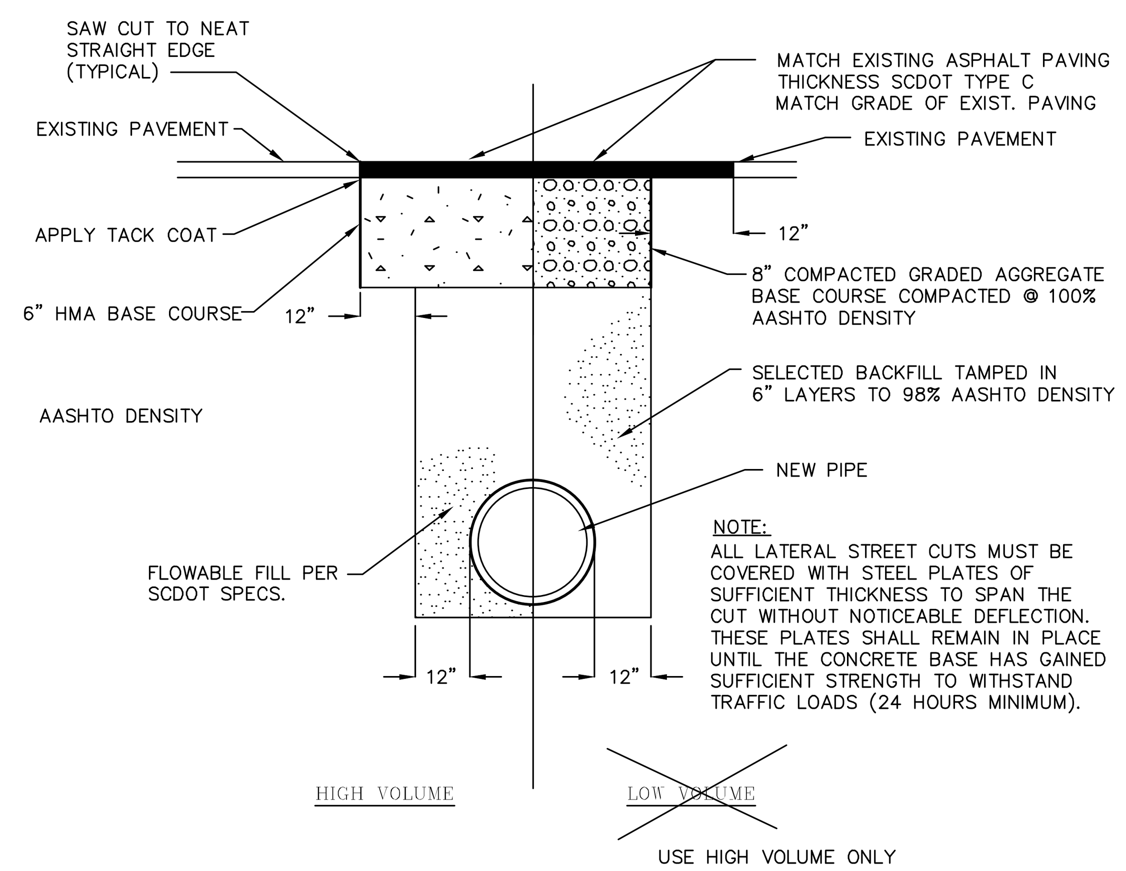

NOTE:
ALL LATERAL STREET CUTS MUST BE COVERED WITH STEEL PLATES OF SUFFICIENT THICKNESS TO SPAN THE CUT WITHOUT NOTICEABLE DEFLECTION. THESE PLATES SHALL REMAIN IN PLACE UNTIL THE CONCRETE BASE HAS GAINED SUFFICIENT STRENGTH TO WITHSTAND TRAFFIC LOADS (24 HOURS MINIMUM).

ASPHALT CUT AND PATCH

DETAIL 02740-003

REFERENCES

NATIONAL DOCUMENTS
AASHTO M235

SCDOT DOCUMENTS
QUALIFIED PRODUCT LIST 14

RELATED DRAWINGS & KEYWORDS
719-310-00, 719-305-00, 719-009-01 TO 719-009-05

PRECONSTRUCTION SUPPORT ENGINEER

SOUTH CAROLINA REGISTERED PROFESSIONAL ENGINEER NO. 8858 EDWIN SYLVESTER EARGLE, II

SIGNATURE
MARCH 3, 2008
DATE

#	DATE	CHK	DESCRIPTION
6			
5			
4			
3			
2			
1			
0	3/2008	DSO	GENERAL REVISIONS

SCDOT
SOUTH CAROLINA DEPARTMENT OF TRANSPORTATION
DESIGN STANDARDS OFFICE
955 PARK STREET
ROOM 405
COLUMBIA, SC 29201

STANDARD DRAWING
CATCH BASIN TYPE 9 & 9MH DETAILS

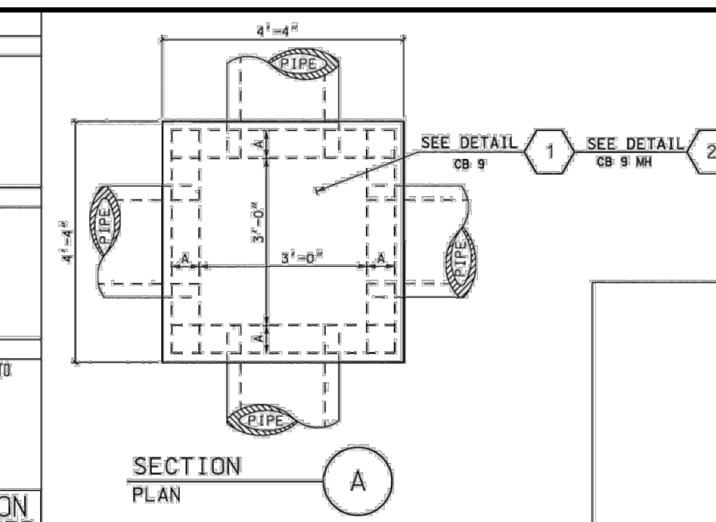

CONTRACTOR MAY USE PRECAST OR BUILT IN PLACE CONSTRUCTION NOTED ABOVE OR COMBINE OPTIONS AS DESIRED. SEE QUALIFIED PRODUCT LIST 14 FOR MANUFACTURERS OF PRECAST ITEMS.	
BUILT IN PLACE	① CB 9 BOTTOM SLAB (PC OR CIP 52"X52"X6") AND ② BRICK WALLS (8") AND ④ CB 9 PC TOP SLAB WITH THROAT LEGS (52"X52"X10") OR ⑤ CB 9 MH PC TOP SLAB WITH THROAT LEGS (52"X52"X10")
ALTERNATE BUILT IN PLACE	① CB 9 BOTTOM SLAB (PC OR CIP 52"X52"X6") AND ② BRICK WALLS (8") AND ⑥ BRICK THROAT (2 COARSE) AND ⑦ CB 9 PC TOP SLAB WITHOUT THROAT LEGS (52"X52"X5") OR ⑧ CB 9 MH PC TOP SLAB WITHOUT THROAT LEGS (52"X52"X5")
PRECAST	③ PC DRAINAGE BOX CONFORMING TO 719-310-00 OR 719-305-00 (3'X3'X__) (MAX 12' DEPTH) AND ④ CB 9 PC TOP SLAB WITH THROAT LEGS (52"X52"X10") OR ⑤ CB 9 MH PC TOP SLAB WITH THROAT LEGS (52"X52"X10")

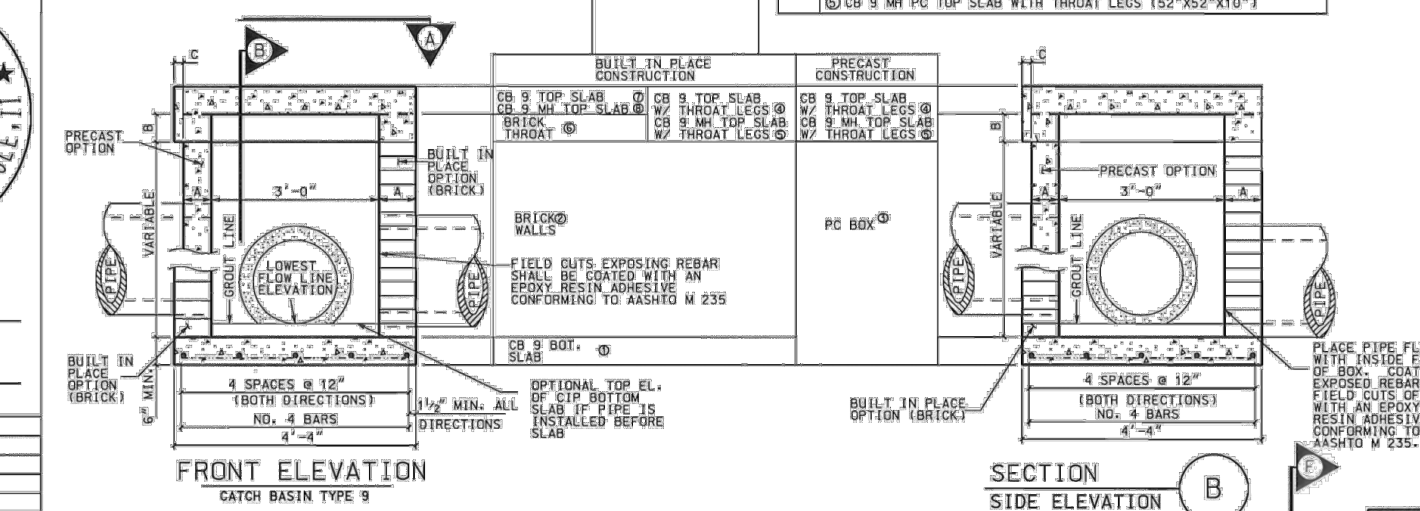

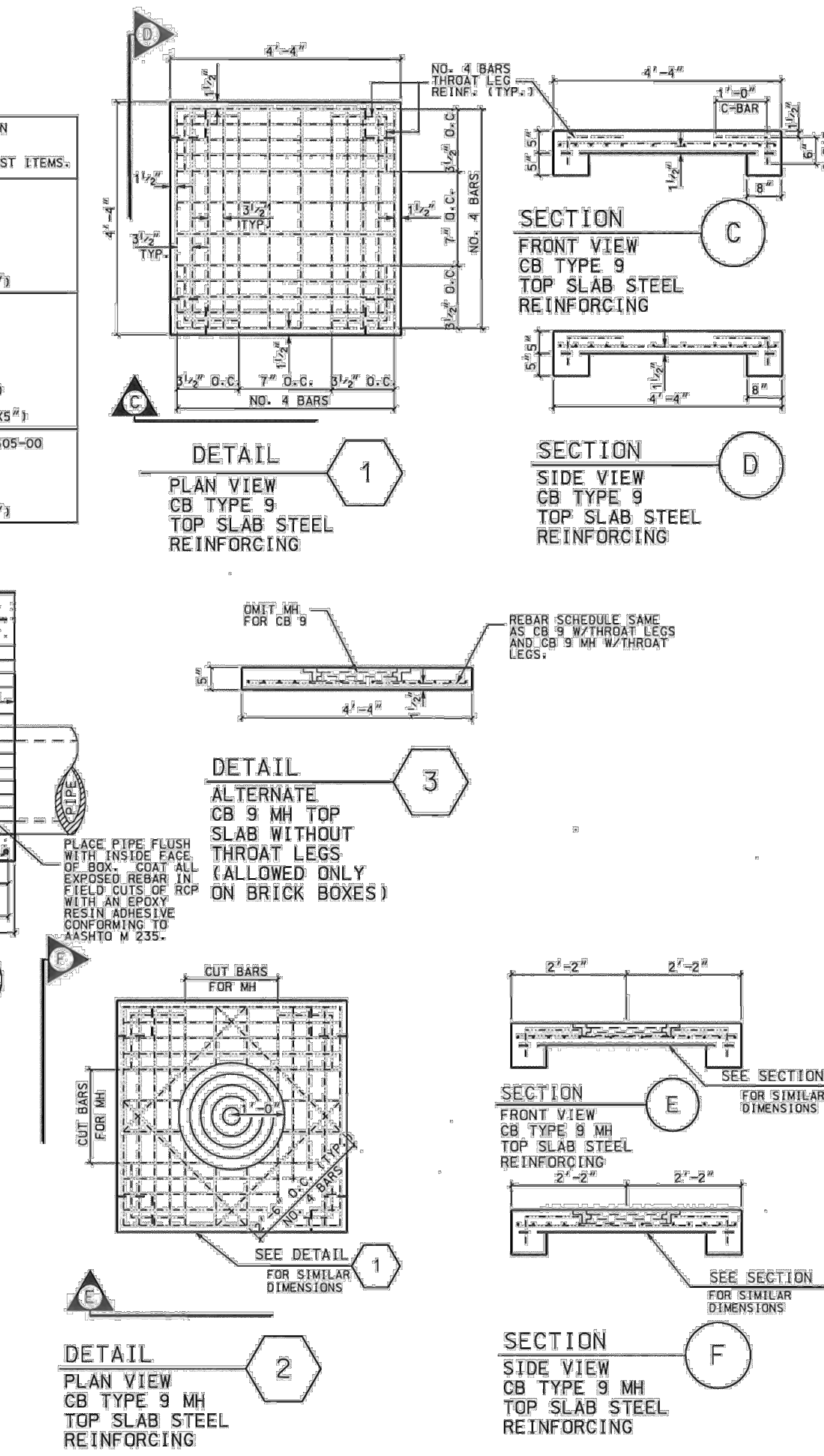

PRECAST ITEMS
CB 9 BOTTOM SLAB (52"X52"X6")
CB 9 TOP SLAB WITH THROAT LEGS (52"X52"X10")
CB 9 MH TOP SLAB WITH THROAT LEGS (52"X52"X10")
ALTERNATE CB 9 TOP SLAB WITHOUT THROAT LEGS (52"X52"X5")
SEE ALSO STD. DRAWING 719-310-00 & 719-305-00

TABLE 719-009A

DIMENSION LABEL	PRECAST OPTION	BUILT IN PLACE OPTION
A	6"	8"
B	5"	2 COURSE OF BRICK
C	2"	0

719-009-01
EFFECTIVE LETTING DATE MAY, 2008
USE SHEETS 719-009-01 THROUGH 719-009-05 FOR THIS ITEM
THIS DRAWING IS NOT TO SCALE

REFERENCES

NATIONAL DOCUMENTS
ASTM C55, ASTM A706, AASHTO M105, AASHTO M306

SCDOT DOCUMENTS
QUALIFIED PRODUCT LIST 13, QUALIFIED PRODUCT LIST 14, QUALIFIED PRODUCT LIST 45

RELATED DRAWINGS & KEYWORDS
719-105-01 TO 719-105-02, 719-110-01, 719-550-00, 719-420-00, 719-425-00, 719-305-00, 719-310-00.

PRECONSTRUCTION SUPPORT ENGINEER

SOUTH CAROLINA REGISTERED PROFESSIONAL ENGINEER NO. 8858 EDWIN SYLVESTER EARGLE, II

SIGNATURE
MARCH 3, 2008
DATE

#	DATE	CHK	DESCRIPTION
6			
5			
4			
3			
2			
1			
0	3/2008	DSO	GENERAL REVISIONS

SCDOT
SOUTH CAROLINA DEPARTMENT OF TRANSPORTATION
DESIGN STANDARDS OFFICE
955 PARK STREET
ROOM 405
COLUMBIA, SC 29201

STANDARD DRAWING
DROP INLET (24"X24") DETAILS

CONTRACTOR MAY USE PRECAST OR BUILT IN PLACE CONSTRUCTION AS NOTED OR COMBINE OPTIONS AS DESIRED. SEE QUALIFIED PRODUCT LIST 14 FOR MANUFACTURERS OF PRECAST ITEMS.	
24"X24" DROP INLET	
BUILT IN PLACE	② 24"X24" DROP INLET BOTTOM SLAB (PC OR CIP 40"X40"X6") AND ③ BRICK WALLS (8") AND ⑤ 24"X24" DROP INLET FRAME AND GRATE
PRECAST	⑦ PRECAST BOX CONFORMING TO STD DRAWING 719-310-00 OR 719-305-00 (2'X2'XH) AND ⑤ 24"X24" DROP INLET FRAME AND GRATE

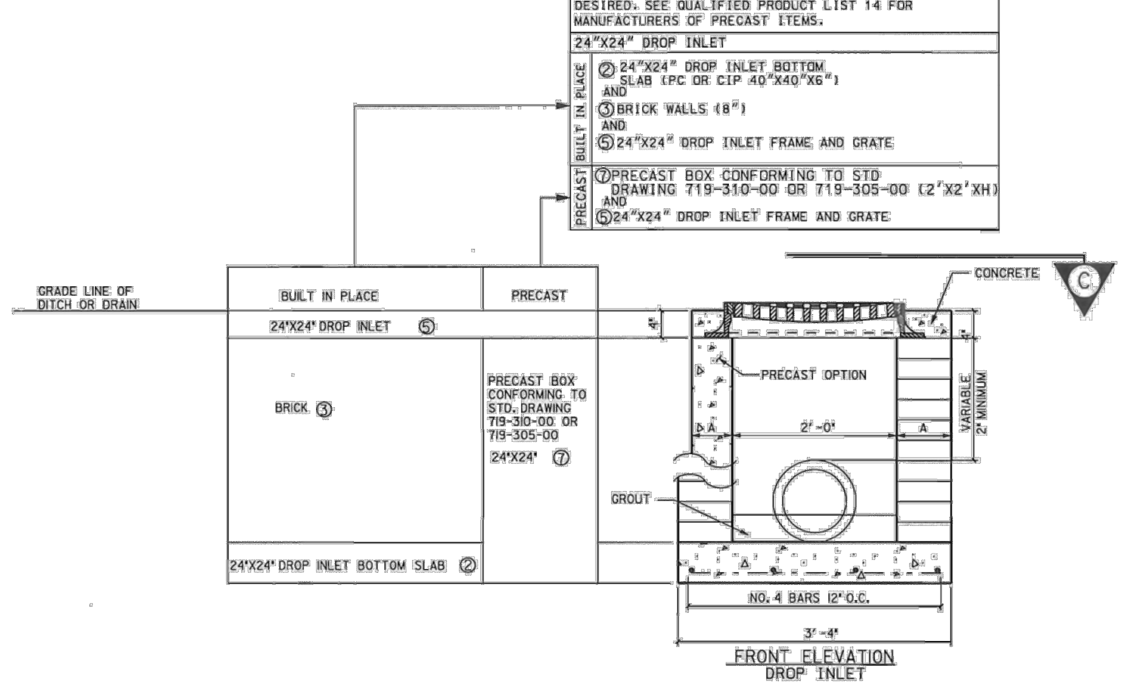

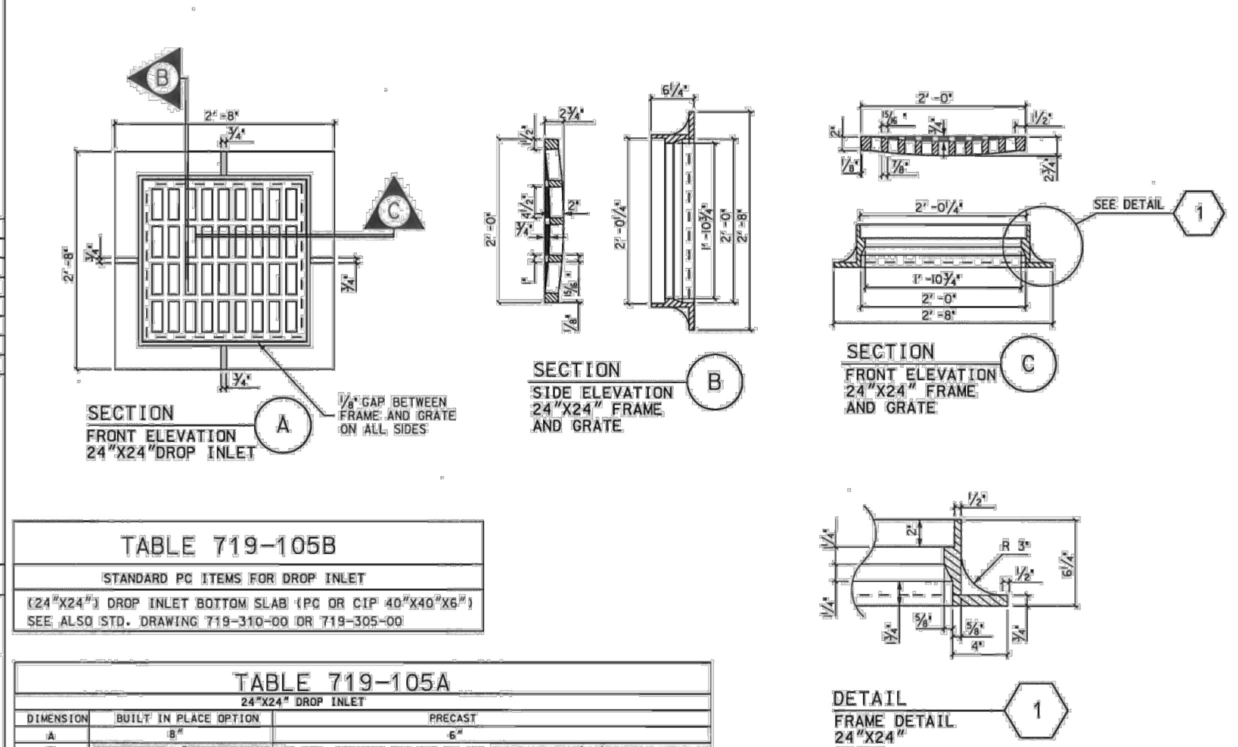

TABLE 719-105B

STANDARD PC ITEMS FOR DROP INLET
(24"X24") DROP INLET BOTTOM SLAB (PC OR CIP 40"X40"X6")
SEE ALSO STD. DRAWING 719-310-00 OR 719-305-00

TABLE 719-105A

24"X24" DROP INLET

DIMENSION	BUILT IN PLACE OPTION	PRECAST
A	8"	6"
B	24"	SEE STD. DRAWING 719-305-00 AND 719-310-00 (2'X2'XH) PRECAST BOX
C	3'-4"	SEE STD. DRAWING 719-305-00 AND 719-310-00 (2'X2'XH) PRECAST BOX

719-105-01
EFFECTIVE LETTING DATE MAY 2008
USE SHEETS 719-105-01 THROUGH 719-105-02 FOR THIS ITEM.
THIS DRAWING IS NOT TO SCALE

NOTES:
1. SEE 719-110-01 FOR DROP INLET (24"X 36"). FOR BUILT IN PLACE CONSTRUCTION OF THE CATCH BASIN WALLS, EITHER BRICK MASONRY (WALLS ONLY) OR CIP CLASS 3000 CONCRETE MAY BE USED. FOR PRECAST CONSTRUCTION, A MINIMUM OF CLASS 4000P CONCRETE SHALL BE USED.

2. CONCRETE WALLS ARE TO BE 6" THICK WITH A MINIMUM REINFORCING STEEL AREA 0.20 SQUARE INCHES PER FOOT UNLESS NOTED. FOR BRICK, THE WALLS ARE TO BE 8" THICK CONCRETE BRICK AND SIMILAR SOLID UNITS SHALL CONFORM TO THE REQUIREMENTS OF ASTM C 55, GRADE S-11. THE INTERIOR DIMENSIONS ARE TO REMAIN AS SHOWN FOR EITHER TYPE OF CONSTRUCTION.

3. THE BOTTOM SLAB OF THE BOX SHALL BE A MINIMUM OF 6" THICK REINFORCED CONCRETE (CLASS 3000 OR 4000P) WITH A REINFORCING STEEL AREA OF 0.20 SQUARE INCHES PER FOOT. WIRE MESH BE USED IN LIEU OF STEEL BARS PROVIDED A MINIMUM OF 0.20 SQUARE INCHES PER FOOT I S MET.

4. MORTAR SHALL BE TYPE S OR M.

5. REINFORCING STEEL SHALL BE ASTM A-706, LOW-ALLOY STEEL DEFORMED BARS FOR CONCRETE REINFORCEMENT, GRADE 60. WIRE MESH SHALL CONFORM TO AASHTO M 55 AND M

6. SEE STANDARD DRAWING 719-550-00 FOR STEPS, WHICH ARE REQUIRED WHEN STRUCTURE DEPTH EXCEEDS 4'-6".

7. SEE STANDARD DRAWINGS 719-420-00 AND 719-425-00 FOR DEPTHS GREATER THAN 12'. PRECAST CONCRETE CIRCULAR DRAINAGE STRUCTURES ARE REQUIRED WHEN THE DEPTH FROM THE TOP OF THE DRAINAGE BOX BOTTOM SLAB TO THE TOP OF THE GROUND EXCEEDS 12'-0".

8. LOCATION AND SIZE OF PIPES ARE SITE SPECIFIC. (SEE DRAINAGE PLANS). THE BOTTOM OF THE CATCH BASIN IS TO BE GROUTED TO THE LOWEST FLOW LINE ELEVATION OF ALL PIPES. BOTTOM SLAB IS CAST IN PLACE WITH PIPES INSTALLED, BOTTOM SLAB THICKNESS MUST BE ACHIEVED BEYOND PIPE OUTSIDE DIAMETER.

9. THE FLOOR OF THE BASIN MUST SLOPE IN THE DIRECTION OF THE OUTLET PIPE AS SHOWN AND THE INSIDE OF OUTLET PIPE SHALL BE FLUSH WITH FLOOR OF BASIN.

10. SEE STANDARD DRAWING 719-305-00 OR 719-310-00 FOR MAXIMUM PIPE DIAMETERS. THE PIPE SIZES SHOWN ARE MAXIMUM FOR BRICK AND PRECAST BOXES WHEN PIPE ENTERS PERPENDICULAR AND AT THE CENTER OF THE BOX WALL. CONTRACTOR SHOULD CONFIRM THAT PIPE USED FITS APPROPRIATELY INTO BOX.

FRAME AND GRATE NOTES:
11. ALL CASTINGS SHALL CONFORM TO AASHTO M 105, CLASS 35B AND THE SPECIFICATIONS OF AASHTO M 306

12. (a) STEEL GRATES AND FRAME MAY BE USED IN LIEU OF CAST IRON AS LONG AS THE LOADING (NOTE 12d) AND HYDRAULIC REQUIREMENTS ARE MET, AND ARE ON THE DEPARTMENT'S LIST OF APPROVED SUPPLIERS. (QUALIFIED PRODUCT LIST 45)
(b) STEEL GRATES SHALL BE HOT DIP GALVANIZED IN ACCORDANCE WITH AASHTO M 111.
(C) STEEL GRATES AND FRAMES SHALL BE DIMENSIONED TO BE INTERCHANGEABLE WITH EACH PIECE OF THE CAST IRON GRATE AND FRAME SHOWN. STEEL GRATES MUST HAVE POSITIVE MEANS TO BE RETAINED IN THE FRAME.
(d) STRENGTH REQUIREMENTS OF STEEL GRATES AND FRAMES MUST MEET AASHTO M 306
(e) MANUFACTURERS DESIRING TO BE PLACED ON THE DEPARTMENT'S QUALIFIED PRODUCT LIST SHOULD CONTACT THE MATERIALS AND RESEARCH ENGINEER FOR PROCEDURES.

13. THE LONGEST DIMENSIONS OF THE OPENING IN THE IRON GRATE SHOULD BE ORIENTED IN THE DIRECTION OF FLOW, IF PRACTICABLE. THIS GRATE IS NOT SUITABLE FOR PEDESTRIAN TRAFFIC BECAUSE GRATE OPENINGS EXCEED 1/2".

14. AS SHOWN BY THIS DRAWING, THE FRAME IS SET LEVEL, BUT THE ENGINEER MAY SET SAME ON SLOPE AS REQUIRED BY LOCAL DRAINAGE CONDITIONS.

15. AFTER THE FRAME IS SET IN ITS FINAL POSITION, IT IS TO BE ENCASED WITH CONCRETE AS SHOWN BY DRAWING.

16. ALL MANUFACTURING PROCESSES FOR THE FRAME AND GRATE MUST OCCUR IN THE UNITED STATES.

PRECAST NOTES:
17. THE USE OF PRECAST UNITS WILL NOT RELIEVE THE CONTRACTOR OF THE RESPONSIBILITY OF OBTAINING SATISFACTORY INSTALLATIONS. SEE STANDARD DRAWINGS FOR PRECAST CONCRETE DRAINAGE BOX OR STRUCTURE FOR ADDITIONAL DETAILS AND SPECIFICATIONS.

18. LIFT HOLES AND/OR DEVICES MAY BE PLACED AS NECESSRY . ALL LIFT HOLES SHALL BE GROUTED SHUT PRIOR TO COMPLETION OF THE INSTALLATION. ALL LIFTING METHODS MUST MEET OSHA REGULATIONS.

19. THE CONTRACTOR SHALL USE A SINGLE SOURCE MANUFACTURER CHOSEN FROM THE LIST ON QUALIFIED PRODUCT LIST 14 FOR PRECAST ITEMS ON THIS DRAWING.

20. FOLLOW QUALIFIED PRODUCT POLICY 14 IN ORDER TO BE LISTED ON QUALIFIED PRODUCT LIST 14.

21. CONTRACTOR MAY SUBMIT DESIGN DRAWINGS AND CALCULATIONS FOR MODIFICATIONS TO THIS ITEM ON A PROJECT BY PROJECT BASIS. MODIFICATIONS TO THESE ITEMS WILL NOT BE LISTED ON ANY QUALIFIED PRODUCT LIST. SUBMIT ALL PROPOSALS FOR PROJECT SPECIFIC MODIFICATIONS TO THE RESIDENT ENGINEER FOR REVIEW BY THE ENGINEER OF RECORD.

22. JOINTS BETWEEN INSTALLED PIECES AND PRECAST ITEMS TO BE PLACED SHALL BE SEALED WITH A 1/2" GROUT LIFT OR AN APPROPRIATE PLASTIC PREFORMED GASKET (QUALIFIED PRODUCT LIST 13.)

PRECAST INSTALLATION NOTES:
23. BED SHALL BE PREPARED AND COMPACTED FOR PRECAST DRAINAGE STRUCTURE AS REQUIRED BY SCDOT STANDARD SPECIFICATIONS FOR PRECAST ITEMS. ELEVATION OF BEDDING MATERIAL SHALL BE APPROPRIATE TO ACCOMMODATE ELEVATIONS OF ALL PIPES AND REQUIRED BOX TOP ELEVATION.

24. PLACE AND LEVEL PRECAST BOX OR SLAB.

25. PIPES SHALL BE INSTALLED AND GROUTED IN PLACE.

26. PIPES AND BOX SHALL BE BACKFILLED AND COMPACTED AS REQUIRED BY SCDOT STANDARD SPECIFICATIONS.

27. ANY LOCATION WHERE THE ABOVE REQUIREMENTS CANNOT BE MET SHALL BE COMPLETED USING CAST IN PLACE MATERIALS MEETING THE REQUIREMENTS OF THIS STANDARD DRAWING. ANY ADDITIONAL MATERIALS OR COSTS ASSOCIATED WITH THE USE OF PRECAST SHALL BE PAID FOR BY THE CONTRACTOR AND MAY NOT BE CHARGED TO SCDOT.

28. THE CONTRACT UNIT PRICE FOR DROP INLETS SHALL INCLUDE THE COST OF FURNISHING ALL MATERIALS, (BUILT IN PLACE OR PRECAST), AND WORK INCIDENTAL TO THE CONSTRUCTION OF THE STRUCTURE COMPLETE IN PLACE AS SHOWN, INCLUDING THE CURB AND GUTTER, IN ACCORDANCE WITH THE SCDOT STANDARD SPECIFICATIONS FOR HIGHWAY CONSTRUCTION (LATEST EDITION).

29. PRECAST CONCRETE CIRCULAR STRUCTURES ARE REQUIRED FOR THE FOLLOWING APPLICATIONS UNLESS PROHIBITED BY THE PLANS OR SPECIAL PROVISIONS.

(a) ON DRAINAGE STRUCTURES WITH A DEPTH EQUAL TO OR GREATER THAN 12 FEET.

(b) ON DRAINAGE STRUCTURES WHERE THE FLOW LINE ELEVATION OF THE INLET PIPE IS EQUAL TO OR HIGHER THAN THE INSIDE TOP (SOFFIT) OF THE OUTLET PIPE.

(c) AS REQUIRED BY THE PROJECT PLANS.

30. THE PAY ITEM SHALL BE:
DROP INLET (24"X24")________________EA

REFERENCES

NATIONAL DOCUMENTS
ASTM C55, ASTM A706, AASHTO M55, AASHTO M105, AASHTO M306, AASHTO M111

SCDOT DOCUMENTS
QUALIFIED PRODUCT LIST 14, QUALIFIED PRODUCT LIST 13

RELATED DRAWINGS & KEYWORDS
719-110-01 TO 719-11-02, 719-105-01, 719-550-00, 719-420-00, 719-425-00, 719-305-00, 719-310-00

PRECONSTRUCTION SUPPORT ENGINEER

SOUTH CAROLINA REGISTERED PROFESSIONAL ENGINEER NO. 8858 EDWIN SYLVESTER EARGLE, II

SIGNATURE
MARCH 3, 2008
DATE

#	DATE	CHK	DESCRIPTION
6			
5			
4			
3			
2			
1			
0	3/2008	DSO	GENERAL REVISIONS

SCDOT
SOUTH CAROLINA DEPARTMENT OF TRANSPORTATION
DESIGN STANDARDS OFFICE
955 PARK STREET
ROOM 405
COLUMBIA, SC 29201

STANDARD DRAWING
DROP INLET (24"X36") DETAILS

CONTRACTOR MAY USE PRECAST OR BUILT IN PLACE CONSTRUCTION AS NOTED OR COMBINE OPTIONS AS DESIRED. SEE QUALIFIED PRODUCT LIST 14 FOR MANUFACTURERS OF PRECAST ITEMS.	
24"X36" DROP INLET	
BUILT IN PLACE	① 24"X36" DROP INLET BOTTOM SLAB (PC OR CIP 40"X52"X6") AND ③ BRICK WALLS (8") AND ④ 24"X36" DROP INLET FRAME AND GRATE
PRECAST	⑥ PRECAST BOX CONFORMING TO STD. DRAWING 719-305-00 OR 719-310-00 AND (3'X2'XH) ④ 24"X36" DROP INLET FRAME AND GRATE

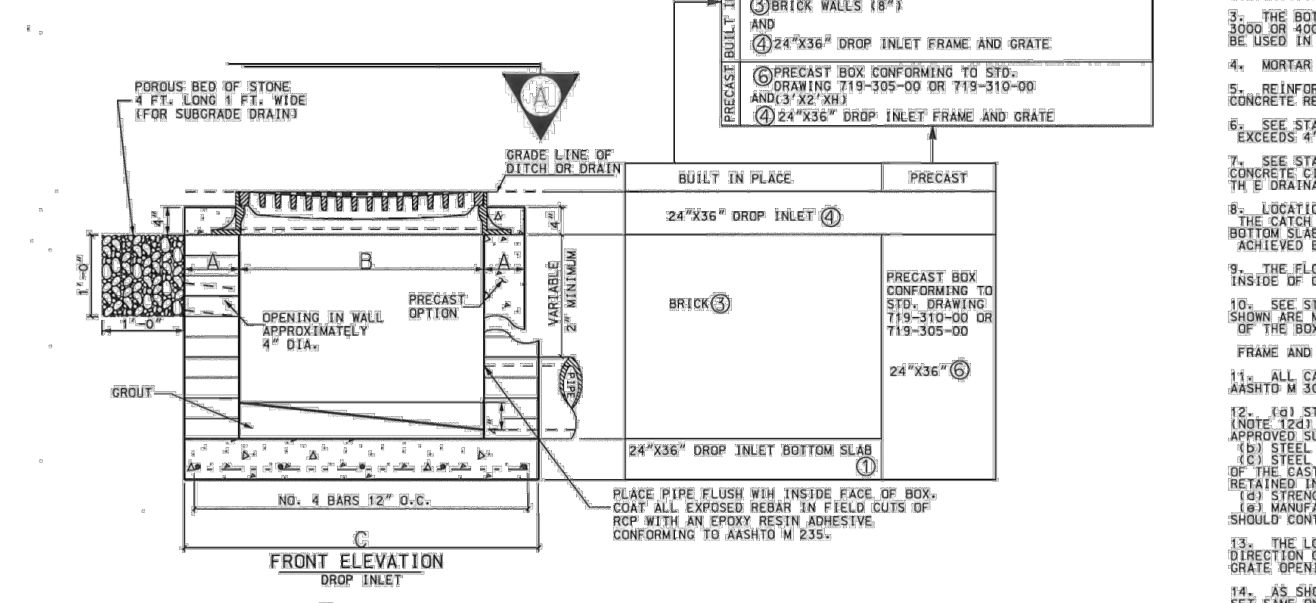

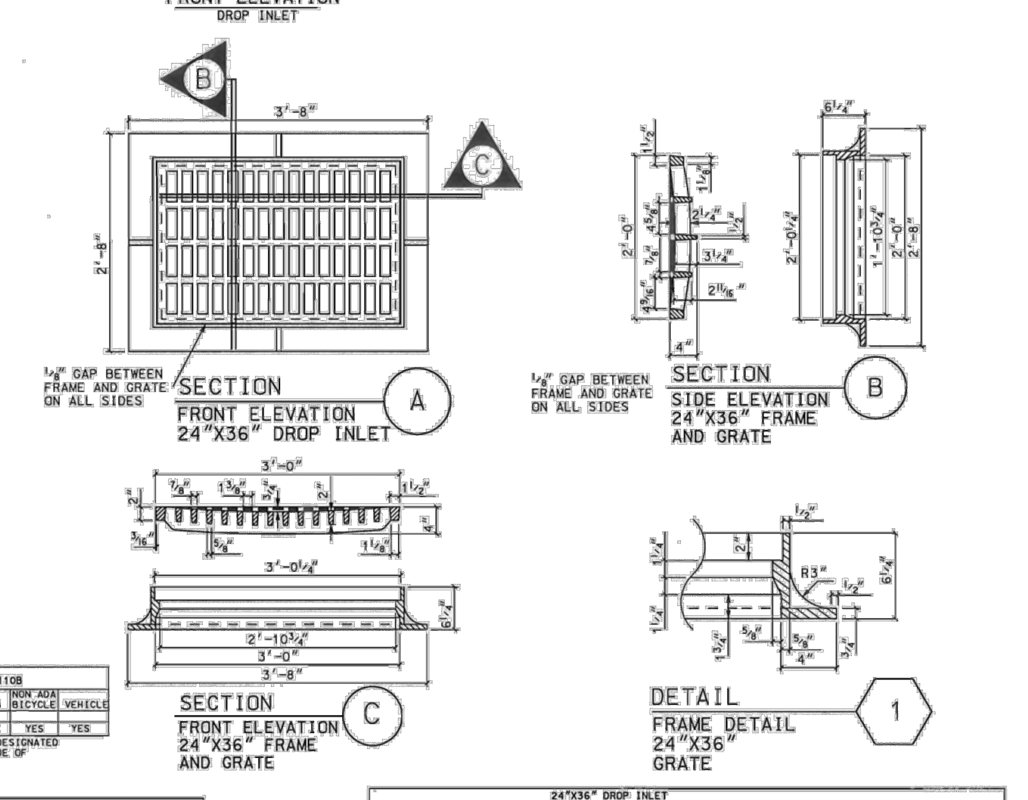

TABLE 719-110B

DESCRIPTION	ADA	NON ADA BICYCLE	VEHICLE
(24"X36") DROP INLET	NO	YES	YES

USE ANYWHERE OUTSIDE OF DESIGNATED PEDESTRIAN PATHS. (OUTSIDE OF SIDEWALKS & CROSSWALKS)

TABLE 719-110A STANDARD PC ITEMS FOR DROP INLET
(24"X36") DROP INLET BOTTOM SLAB (PC OR CIP 40"X52"X6")
SEE ALSO STD. DRAWING 719-310-00 OR 719-305-00

24"X36" DROP INLET

DIMENSION	BUILT IN PLACE OPTION	PRECAST
A	8"	6"
B	36"	SEE STD. DRAWING 719-305-00 AND 719-310-00 (2'X3'XH) PRECAST BOX
C	4'-4"	SEE STD. DRAWING 719-305-00 AND 719-310-00 (2'X3'XH) PRECAST BOX

719-110-01
EFFECTIVE LETTING DATE MAY 2008
THIS DRAWING IS NOT TO SCALE

NOTES:
1. SEE 719-105-01 FOR DROP INLET (24X24). FOR BUILT IN PLACE CONSTRUCTION OF THE CATCH BASIN WALLS, EITHER BRICK MASONRY (WALLS ONLY) OR CIP CLASS 3000 CONCRETE MAY BE USED. FOR PRECAST CONSTRUCTION, A MINIMUM OF CLASS 4000P CONCRETE SHALL BE USED.

2. CONCRETE WALLS ARE TO BE 6" THICK WITH A MINIMUM REINFORCING STEEL AREA 0.20 SQUARE INCHES PER FOOT UNLESS NOTED. FOR BRICK, THE WALLS ARE TO BE 8" THICK CONCRETE BRICK AND SIMILAR SOLID UNITS SHALL CONFORM TO THE REQUIREMENTS OF ASTM C 55, GRADE S-11. THE INTERIOR DIMENSIONS ARE TO REMAIN AS SHOWN FOR EITHER TYPE OF CONSTRUCTION.

3. THE BOTTOM SLAB OF THE BOX SHALL BE A MINIMUM OF 6" THICK REINFORCED CONCRETE (CLASS 3000 OR 4000P) WITH A REINFORCING STEEL AREA OF 0.20 SQUARE INCHES PER FOOT. WIRE MESH BE USED IN LIEU OF STEEL BARS PROVIDED A MINIMUM OF 0.20 SQUARE INCHES PER FOOT I S MET.

4. MORTAR SHALL BE TYPE S OR M.

5. REINFORCING STEEL SHALL BE ASTM A-706, LOW-ALLOY STEEL DEFORMED BARS FOR CONCRETE REINFORCEMENT, GRADE 60. WIRE MESH SHALL CONFORM TO AASHTO M 55 AND M.

6. SEE STANDARD DRAWING 719-550-00 FOR STEPS, WHICH ARE REQUIRED WHEN STRUCTURE DEPTH EXCEEDS 4'-6".

7. SEE STANDARD DRAWINGS 719-420-00 AND 719-425-00 FOR DEPTHS GREATER THAN 12'. PRECAST CONCRETE CIRCULAR DRAINAGE STRUCTURES ARE REQUIRED WHEN THE DEPTH FROM THE TOP OF TH E DRAINAGE BOX BOTTOM SLAB TO THE TOP OF THE GROUND EXCEEDS 12'-0".

8. LOCATION AND SIZE OF PIPES ARE SITE SPECIFIC. (SEE DRAINAGE PLANS). THE BOTTOM OF THE CATCH BASIN IS TO BE GROUTED TO THE LOWEST FLOW LINE ELEVATION OF ALL PIPES. BOTTOM SLAB IS CAST IN PLACE WITH PIPES INSTALLED, BOTTOM SLAB THICKNESS MUST BE ACHIEVED BEYOND PIPE OUTSIDE DIAMETER.

9. THE FLOOR OF THE BASIN MUST SLOPE IN THE DIRECTION OF THE OUTLET PIPE AS SHOWN AND THE INSIDE OF OUTLET PIPE SHALL BE FLUSH WITH FLOOR OF BASIN.

10. SEE STANDARD DRAWING 719-305-00 OR 719-310-00 FOR MAXIMUM PIPE DIAMETERS. THE PIPE SIZES SHOWN ARE MAXIMUM FOR BRICK AND PRECAST BOXES WHEN PIPE ENTERS PERPENDICULAR AND AT THE CENTER OF THE BOX WALL. CONTRACTOR SHOULD CONFIRM THAT PIPE USED FITS APPROPRIATELY INTO BOX.

FRAME AND GRATE NOTES:

11. ALL CASTINGS SHALL CONFORM TO AASHTO M 105, CLASS 35B AND THE SPECIFICATIONS OF AASHTO M 306

12. (a) STEEL GRATES AND FRAME MAY BE USED IN LIEU OF CAST IRON AS LONG AS THE LOADING (NOTE 12d) AND HYDRAULIC REQUIREMENTS ARE MET, AND ARE ON THE DEPARTMENT'S LIST OF APPROVED SUPPLIERS. (QUALIFIED PRODUCT LIST 45)
(b) STEEL GRATES SHALL BE HOT DIP GALVANIZED IN ACCORDANCE WITH AASHTO M 111.
(C) STEEL GRATES AND FRAMES SHALL BE DIMENSIONED TO BE INTERCHANGEABLE WITH EACH PIECE OF THE CAST IRON GRATE AND FRAME SHOWN. STEEL GRATES MUST HAVE POSITIVE MEANS TO BE RETAINED IN THE FRAME.
(d) STRENGTH REQUIREMENTS OF STEEL GRATES AND FRAMES MUST MEET AASHTO M 306
(e) MANUFACTURERS DESIRING TO BE PLACED ON THE DEPARTMENT'S QUALIFIED PRODUCT LIST SHOULD CONTACT THE MATERIALS AND RESEARCH ENGINEER FOR PROCEDURES.

13. THE LONGEST DIMENSIONS OF THE OPENING IN THE IRON GRATE SHOULD BE ORIENTED IN THE DIRECTION OF FLOW, IF PRACTICABLE. THIS GRATE IS NOT SUITABLE FOR PEDESTRIAN TRAFFIC BECAUSE GRATE OPENINGS EXCEED 1/2".

14. AS SHOWN BY THIS DRAWING, THE FRAME IS SET LEVEL, BUT THE RESIDENT CONSTRUCTION ENGINEER MAY SET SAME ON SLOPE AS REQUIRED BY LOCAL DRAINAGE CONDITIONS.

15. AFTER THE FRAME IS SET IN ITS FINAL POSITION, IT IS TO BE ENCASED WITH CONCRETE AS SHOWN BY DRAWING.

16. ALL MANUFACTURING PROCESSES FOR THE FRAME AND GRATE MUST OCCUR IN THE UNITED STATES.

PRECAST NOTES:

17. THE USE OF PRECAST UNITS WILL NOT RELIEVE THE CONTRACTOR OF THE RESPONSIBILITY OF OBTAINING SATISFACTORY INSTALLATIONS. SEE STANDARD DRAWINGS FOR PRECAST CONCRETE DRAINAGE BOX OR STRUCTURE FOR ADDITIONAL DETAILS AND SPECIFICATIONS.

18. LIFT HOLES AND/OR DEVICES MAY BE PLACED AS NECESSRY. ALL LIFT HOLES SHALL BE GROUTED SHUT PRIOR TO COMPLETION OF THE INSTALLATION. ALL LIFTING METHODS MUST MEET OSHA REGULATIONS.

19. THE CONTRACTOR SHALL USE A SINGLE SOURCE MANUFACTURER CHOSEN FROM THE LIST ON QUALIFIED PRODUCT LIST 14 FOR PRECAST ITEMS ON THIS DRAWING.

20. FOLLOW QUALIFIED PRODUCT POLICY 14 IN ORDER TO BE LISTED ON QUALIFIED PRODUCT LIST 14.

21. CONTRACTOR MAY SUBMIT DESIGN DRAWINGS AND CALCULATIONS FOR MODIFICATIONS TO THIS ITEM ON A PROJECT BY PROJECT BASIS. MODIFICATIONS TO THESE ITEMS WILL NOT BE LISTED ON ANY QUALIFIED PRODUCT LIST. SUBMIT ALL PROPOSALS FOR PROJECT SPECIFIC MODIFICATIONS TO THE RESIDENT ENGINEER FOR REVIEW BY THE ENGINEER OF RECORD.

22. JOINTS BETWEEN INSTALLED PIECES AND PRECAST ITEMS TO BE PLACED SHALL BE SEALED WITH A 1/2" GROUT LIFT OR AN APPROPRIATE PLASTIC PREFORMED GASKET (FROM QUALIFIED PRODUCT LIST 13.)

PRECAST INSTALLATION NOTES:

23. BED SHALL BE PREPARED AND COMPACTED FOR PRECAST DRAINAGE STRUCTURE AS REQUIRED BY SCDOT STANDARD SPECIFICATIONS FOR PRECAST ITEMS. ELEVATION OF BEDDING MATERIAL SHALL BE APPROPRIATE TO ACCOMMODATE ELEVATION OF ALL PIPES AND REQUIRED BOX TOP ELEVATION.

24. PLACE AND LEVEL PRECAST BOX OR SLAB.

25. PIPES SHALL BE INSTALLED AND GROUTED IN PLACE.

26. PIPES AND BOX SHALL BE BACKFILLED AND COMPACTED AS REQUIRED BY SCDOT STANDARD SPECIFICATIONS.

27. ANY LOCATION WHERE THE ABOVE REQUIREMENTS CANNOT BE MET SHALL BE COMPLETED USING CAST IN PLACE MATERIALS MEETING THE REQUIREMENTS OF THIS STANDARD DRAWING. ANY ADDITIONAL MATERIALS OR COSTS ASSOCIATED WITH THE USE OF PRECAST SHALL BE PAID FOR BY THE CONTRACTOR AND MAY NOT BE CHARGED TO SCDOT.

28. THE CONTRACT UNIT PRICE FOR DROP INLETS SHALL INCLUDE THE COST OF FURNISHING ALL MATERIALS, (BUILT IN PLACE OR PRECAST), AND WORK INCIDENTAL TO THE CONSTRUCTION OF THE STRUCTURE COMPLETE IN PLACE AS SHOWN, INCLUDING THE CURB AND GUTTER, IN ACCORDANCE WITH THE SCDOT STANDARD SPECIFICATIONS FOR HIGHWAY CONSTRUCTION (LATEST EDITION).

29. PRECAST CONCRETE CIRCULAR STRUCTURES (AS SHOWN ON 719-420-00) ARE REQUIRED FOR THE FOLLOWING APPLICATIONS UNLESS PROHIBITED BY THE PLANS OR SPECIAL PROVISIONS.

(a) ON DRAINAGE STRUCTURES WITHA A DEPTH EQUAL TO OR GREATER THAN 12 FEET.

(b) ON DRAINAGE STRUCTURES WHERE THE FLOW LINE ELEVATION OF THE INLET PIPE IS EQUAL TO OR HIGHER THAN THE INSIDE TOP (SOFFIT) OF THE OUTLET PIPE.

(c) AS REQUIRED BY THE PROJECT PLANS.

30. THE PAY ITEM SHALL BE:
DROP INLET (24"X36")________________EA

USE SHEETS 719-110-01 THROUGH 719-110-02 FOR THIS ITEM.

SOUTH CAROLINA PROFESSIONAL ENGINEER No. 22816 LICENSED PAUL R. MOORE 12/30/15

SOUTH CAROLINA WARD EDWARDS, INC. No. C00152 CERTIFICATE OF AUTHORIZATION

NO.	DESCRIPTION	DATE
1	PLAN REVISIONS	
2		
3		
4		
5		
6		
7		

Ward Edwards
ENGINEERING
P.O. BOX 381, BLUFFTON, SOUTH CAROLINA 29910
PH (843) 837-5250 / FAX (843) 837-2558
WWW.WARDEDWARDS.COM

HANCOCK STREET DRAINAGE IMPROVEMENTS

CITY OF BEAUFORT, SOUTH CAROLINA

PREPARED FOR THE CITY OF BEAUFORT
BEAUFORT, SOUTH CAROLINA

CONSTRUCTION DETAILS

☑ NOT FOR CONSTRUCTION
☐ RELEASED FOR CONSTRUCTION

PROJECT #:	130215E
DATE:	12/30/15
DESIGNED BY:	PRM
CHECKED BY:	GAB
SCALE:	AS NOTED

SHEET
C105C

IF THIS SHEET IS LESS THAN 22" X 34" IT IS A REDUCED PRINT, SCALE ACCORDINGLY