REPAIRS AND UPGRADES
TO
DOWNTOWN MARINA
BEAUFORT, SOUTH CAROLINA

PROJECT VICINITY
SCALE: N.T.S.

PROJECT LOCATION
SCALE: N.T.S.

TABLE OF CONTENTS

T-01 TITLE AND LOCATION
G-01 GENERAL NOTES
S-01 SITE PLAN

McSweeney Engineers
123 Cannon Street
Charleston, SC 29403
(843) 974-5621
www.mcsweeneyengineers.com

REPAIRS AND UPGRADES TO
DOWNTOWN MARINA
BEAUFORT, SOUTH CAROLINA

SOUTH CAROLINA REGISTERED PROFESSIONAL ENGINEER
10/21/15
No. 28237
DAVID B. McSWEENEY

DESIGNED BY:	WDB
DRAWN BY:	WDB
CHECKED BY:	DBM
DATE:	10/21/15
JOB NUMBER:	COB-M-T2
DRAWING FILE:	MARINA.DWG
REV.	DATE:

T-01
TITLE SHEET

GENERAL NOTES:

1. THE CONTRACTOR IS ADVISED THAT THE DRAWINGS FORM A PART OF THE CONTRACT DOCUMENTS AND ALL WORK SHALL BE PERFORMED IN ACCORDANCE WITH THE SPECIFICATIONS AND THE DRAWINGS. THE CONTRACTOR SHALL KEEP A COPY OF THE CONTRACT DOCUMENTS ON SITE AT ALL TIMES DURING THE WORK.
2. ALL EXISTING DIMENSIONS, ELEVATIONS AND CONDITIONS RELATING TO THE WORK SHALL BE FIELD VERIFIED BY THE CONTRACTOR. ALL DISCREPANCIES SHALL BE BROUGHT TO THE ATTENTION OF THE ENGINEER BEFORE ORDERING MATERIALS AND STARTING THE WORK.
3. CONTRACTOR SHALL MAINTAIN ADEQUATE SURVEY CONTROL AT ALL TIMES TO ESTABLISH AND MAINTAIN ALL LINES AND ELEVATIONS.
4. THE SIZE AND LOCATION OF ALL EXISTING UTILITIES IMPACTED BY THE WORK SHALL BE FIELD VERIFIED AND PROTECTED BY THE CONTRACTOR. THE CONTRACTOR MAY RELOCATE UTILITIES TO ACCOMMODATE CONSTRUCTION AS APPROVED BY THE OWNER, AT NO ADDITIONAL COST TO THE OWNER.
5. IT IS THE CONTRACTOR'S RESPONSIBILITY TO DETERMINE ERECTION PROCEDURES AND SEQUENCE TO ENSURE THE SAFETY OF THE FACILITY. THE CONTRACTOR IS RESPONSIBLE TO ERECT, MAINTAIN AND REMOVE TEMPORARY SHORING TO COMPLETE THE WORK. ALL PROPOSED STAGING AREAS SHALL BE COORDINATED WITH THE ENGINEER AND OWNER BEFORE STARTING THE WORK.
6. THE CONTRACTOR IS RESPONSIBLE FOR ALL DAMAGE DONE TO STRUCTURES, UTILITIES, AND VESSELS OR INJURIES TO THE PUBLIC DURING THE PERFORMANCE OF THE WORK. ANY DAMAGE CAUSED DURING CONSTRUCTION OPERATIONS SHALL BE REPAIRED AT NO ADDITIONAL COST TO THE OWNER.
7. THE CONTRACTOR SHALL PROVIDE AND MAINTAIN ENVIRONMENTAL CONTROLS AS REQUIRED BY FEDERAL, STATE, AND MUNICIPAL REGULATIONS AND PERMITS. ENVIRONMENTAL CONTROLS SHALL INCLUDE BUT NOT LIMITED TO TURBIDITY, DUST, AND DEBRIS.
8. THE CONTRACTOR SHALL FOLLOW ALL APPLICABLE FEDERAL, STATE, AND MUNICIPAL REGULATIONS, INCLUDING THE FEDERAL DEPARTMENT OF LABOR, SAFETY, HEALTH ACT, U.S. ARMY CORPS OF ENGINEERS, OFFICE OF COASTAL RESOURCE MANAGEMENT, AND PERMITS.
9. STORAGE, FUELING, AND LUBRICATION OF EQUIPMENT AND MOTORIZED VESSELS SHALL BE CONDUCTED IN A MANNER THAT AFFORDS THE MAXIMUM PROTECTION AGAINST SPILL AND EVAPORATION. FUEL, LUBRICANTS AND OIL SHALL BE MANAGED AND STORED IN ACCORDANCE WITH ALL FEDERAL, STATE, AND LOCAL LAWS AND REGULATIONS. THERE SHALL BE NO STORAGE OF FUEL ON THE PROJECT SITE. FUEL MUST BE BROUGHT TO THE SITE AS NEEDED.
10. STANDARD CONSTRUCTION WORK HOURS SHALL BE BETWEEN 7:00 AM AND 5:00 PM TO MINIMIZE NOISE AND LIGHT DISTURBANCE TO NEARBY RESIDENTIAL PROPERTIES. SPECIAL WORK OUTSIDE OF THESE HOURS SHALL BE SCHEDULED WITH THE OWNER.
11. INSPECTION OF COMPLETED WORK WILL BE PERFORMED FOLLOWING NOTIFICATION FROM THE CONTRACTOR THAT A SPECIFIED PORTION OF THE WORK HAS BEEN COMPLETED.
12. SCDHEC-OCRM PERMIT HAS BEEN OBTAINED BY FOR THE PROJECT. THE CONTRACTOR IS REQUIRED TO OBTAIN ALL OTHER PERMITS AS REQUIRED TO COMPLETE THE WORK. CONTRACTOR SHALL OBTAIN THESE PERMITS PRIOR TO THE COMMENCEMENT OF ANY WORK.
13. CONTRACTOR MUST DISPLAY ON SITE THE APPROPRIATE CONSTRUCTION PLACARDS AS REQUIRED BY THE PERMITTING AGENCIES THROUGHOUT THE PROJECT.

DEMOLITION NOTES:

1. THE CONTRACTOR SHALL PROVIDE CONTROL MEASURES AS REQUIRED BY ENVIRONMENTAL REGULATIONS AND AS REQUIRED TO PREVENT DEBRIS FROM ENTERING THE WATER.
2. ALL MATERIAL REMOVED AND NOT REUSED SHALL BECOME THE PROPERTY OF THE CONTRACTOR AND SHALL BE REMOVED DAILY FROM THE PROPERTY OR PROPERLY STORED IN AN APPROVED LOCATION ON SITE. REMOVED MATERIAL SHALL BE DISPOSED OF IN ACCORDANCE WITH ALL LOCAL, STATE, AND FEDERAL LAWS.
3. ALL MATERIAL INDICATED TO BE SALVAGED SHALL BE CLEANED AND DELIVERED TO: CITY OF BEAUFORT, PUBLIC WORKS DEPARTMENT – 16 BURTON HILL ROAD, BEAUFORT, SC 29906.
4. CONTRACTOR SHALL PROTECT EXISTING UTILITIES AND WORK WHICH ARE TO REMAIN IN PLACE, BE REUSED, OR REMAIN THE PROPERTY OF THE OWNER.

UTILITY NOTES:

1. FIRE SUPPRESSION SYSTEM SHALL CONFORM TO THE NATIONAL FIRE PROTECTION ASSOCIATION PUBLICATION 303 – FIRE PROTECTION STANDARD FOR MARINAS AND BOATYARDS.
2. ALL UTILITY WORK SHALL BE PERFORMED BY QUALIFIED INDIVIDUALS WHO ARE LICENSED IN THEIR RESPECTIVE AREAS OF EXPERTISE.
3. ALL UTILITY WORK SHALL CONFORM TO APPLICABLE CODES AND STANDARDS.

TIMBER NOTES:

1. TIMBER SHALL BE PRESSURE TREATED IN ACCORDANCE WITH THE AMERICAN WOOD PRESERVERS ASSOCIATION AND SHALL CONFORM TO THE MATERIAL PROPERTIES AND TREATMENT LEVELS INDICATED IN THE SPECIFICATIONS.
2. ALL TIMBER CONSTRUCTION SHALL CONFORM TO NATIONAL DESIGN STANDARD FOR WOOD CONSTRUCTION, CURRENT EDITION.

ABBREVIATIONS:

APPROX	APPROXIMATELY
AWPA	AMERICAN WOOD PRESERVERS ASSOCIATION
CL	CENTERLINE
CONC	CONCRETE
DEG	DEGREE
DEMO	DEMOLITION
DIA	DIAMETER
EL	ELEVATION
FG	FINISHED GRADE
FT	FEET
GALV	GALVANIZED
HDG	HOT DIPPED GALVANIZED
ID	INSIDE DIAMETER
KSI	THOUSAND POUNDS PER SQUARE INCH
LBS	POUNDS
LF	LINEAR FEET
MAX	MAXIMUM
MHW	MEAN HIGH WATER
MHHW	MEAN HIGHER HIGH WATER
MIN	MINIMUM
MISC	MISCELLANEOUS
MLLW	MEAN LOWER LOW WATER
MLW	MEAN LOW WATER
NGVD29	NORTH AMERICAN VERTICAL DATUM 1929
NTS	NOT TO SCALE
OC	ON CENTER
OD	OUTSIDE DIAMETER
PL	PLATE
PCF	POUNDS PER CUBIC FOOT
PSF	POUNDS PER SQUARE FEET
PT	PRESSURE TREATED
SCH	SCHEDULE
SQ	SQUARE
SS	STAINLESS STEEL
SSP	STEEL SHEET PILE
STD	STANDARD
TOD	TOP OF DECK
TYP	TYPICAL
UHMW	ULTRA HIGH MOLECULAR WEIGHT
UON	UNLESS OTHERWISE NOTED
W/	WITH

ELEVATION, SECTION OR DETAIL SYMBOLS

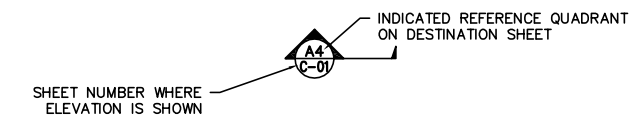

ELEVATION OR SECTION

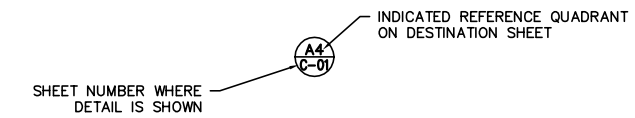

DETAIL

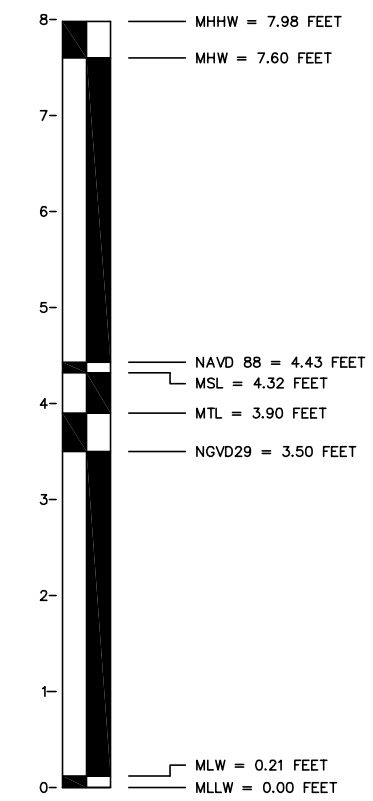

TIDAL DATUM RELATIONSHIPS
NOAA STATION ID: 8667999
PID: CK2243
VM: 4433

McSweeney Engineers
123 Cannon Street
Charleston, SC 29403
(843) 974-5621
www.mcsweeneyengineers.com

REPAIRS AND UPGRADES TO DOWNTOWN MARINA

BEAUFORT, SOUTH CAROLINA

SOUTH CAROLINA PROFESSIONAL ENGINEER 10-21-15 No. 28237 DAVID B. McSWEENEY

DESIGNED BY:	WDB
DRAWN BY:	WDB
CHECKED BY:	DBM
DATE:	10/21/15
JOB NUMBER:	COB-M-T2
DRAWING FILE:	MARINA.DWG
REV.	DATE:

G-01

GENERAL NOTES

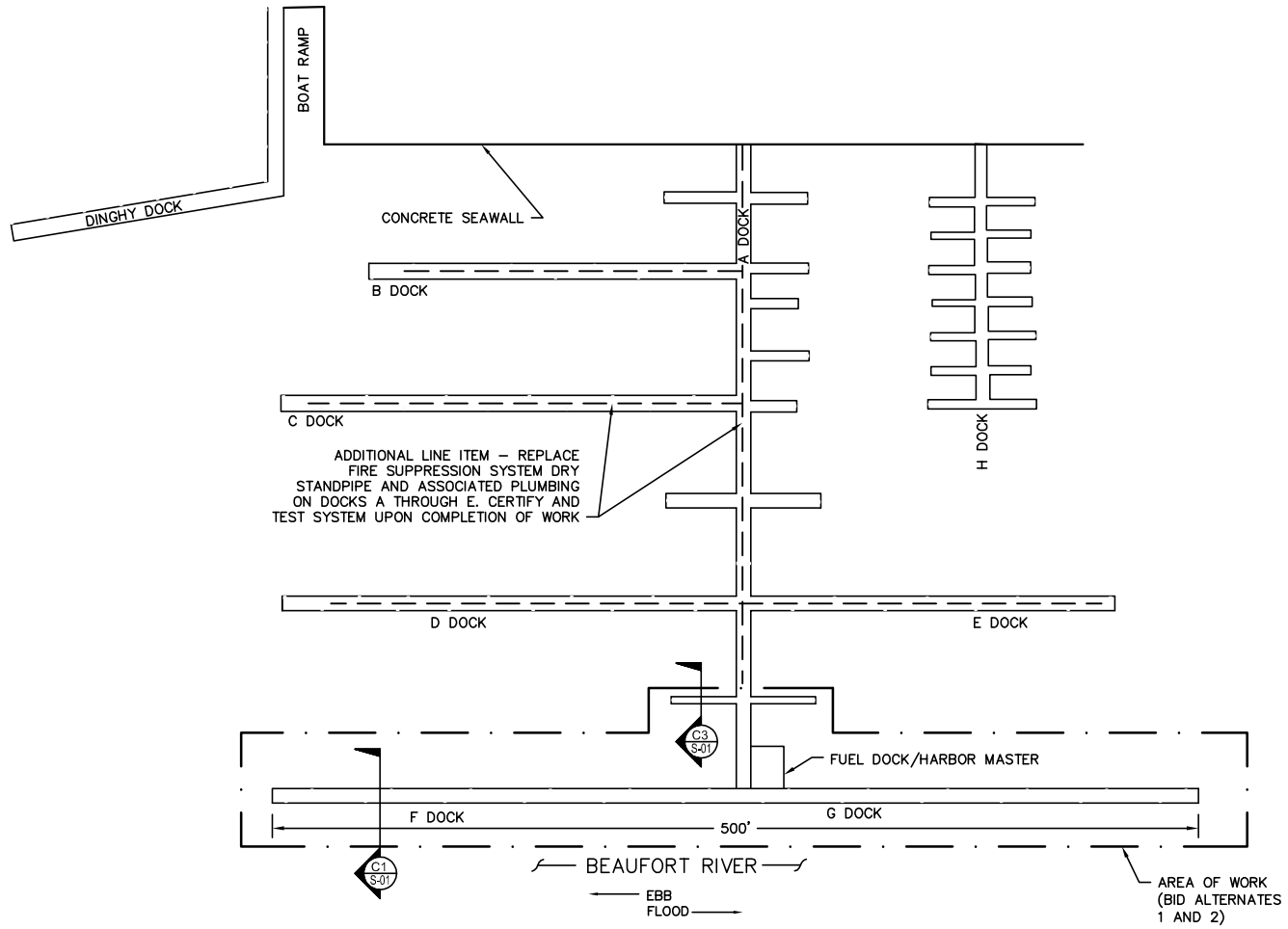

DOWNTOWN MARINA PLAN
SCALE: 1:50

BID ALTERNATE 1:

1. THE BASE BID CONSISTS OF EXTENSIVE REPAIR OF THE TRANSIENT DOCK SYSTEM AS INDICATED ON THESE PLANS. THESE REPAIRS AND THEIR APPROXIMATE QUANTITIES INCLUDE THE FOLLOWING:
   - REMOVE, DISPOSE, AND REPLACE PILE GUIDES (27 EA)
   - REMOVE, DISPOSE, AND REPLACE DECKING (5120 SF)
   - REMOVE, DISPOSE, AND REPLACE AND REPLACE STEEL ANGLES AND BRACKETS (27 EA)
   - REMOVE, DISPOSE, AND REPLACE 2x10 RUBBING BOARDS (1380 LF)
   - SALVAGE AND REUSE VINYL RUB RAIL (1380 LF)
   - REMOVE, DISPOSE, AND REPLACE FIRE SUPPRESSION SYSTEM PIPING (500 LF)
   - SALVAGE AND REUSE CLEATS/INSTALL WITH BACKING PLATES (40 EA)
   - SALVAGE AND REPLACE DAMAGED POWER PEDESTALS (9 EA)
   - SALVAGE AND REUSE REMAINING POWER PEDESTALS (15 EA)
   - SALVAGE AND REPLACE FLOTATION CELLS (250 EA)
   - SALVAGE AND REUSE/RECONNECT WATER, ELECTRICAL, CABLE, INTERNET LINES

NOTE

THE TERMS "SALVAGE AND REPLACE" INDICATE ITEMS WHICH ARE TO BE SALVAGED AND RELOCATED TO THE ADDRESS INDICATED ON SHEET G-01 OF THESE PLANS.

THE TERMS "SALVAGE AND REUSE" INDICATE ITEMS WHICH ARE TO BE SALVAGED AND REUSED AS PART OF THE FLOATING DOCK REPAIRS.

BID ALTERNATE 2:

1. THE BASE ALTERNATE CONSISTS OF REPLACING THE TRANSIENT DOCK SYSTEM AS INDICATED ON THESE PLANS. THESE WORK ITEMS AND AND THEIR APPROXIMATE QUANTITIES INCLUDE THE FOLLOWING:
   - REMOVE EXISTING DOCK SYSTEM AND REPLACE WITH SULLIVAN FLOTATION SYSTEM OR ENGINEER APPROVED EQUAL (5120 SF)
   - INSTALL NEW FIRE SUPPRESSION PIPING (500 LF)
   - INSTALL NEW WATER, ELECTRICAL, CABLE, INTERNET LINES
   - REPLACE POWER PEDESTALS (24 EA)

NOTE:

FOR ALL ITEMS LISTED IN THE BID ALTERNATE SHOP DRAWINGS MUST BE SUBMITTED AND APPROVED BY THE ENGINEER PRIOR TO INSTALLATION. SHOP DRAWINGS MUST CLEARLY INDICATE MEMBER SIZES, QUANTITY, CONNECTION DETAILS, MATERIAL PROPERTIES, AND HARDWARE.

NEW FLOATING DOCKS LISTED UNDER THE BID ALTERNATE SHALL BE DESIGNED TO RESIST LATERAL TORSIONAL ROTATION (LISTING). SHOP DRAWINGS MUST CLEARLY INDICATE METHODS TO PREVENT EXCESSIVE LIST.

FOR ENGINEER APPROVAL SHOP DRAWINGS MUST BE LEGIBLE AND CONTAIN SUFFICIENT DETAIL.

ADDITIONAL LINE ITEM:

1. CONTRACTOR SHALL SUBMIT WITH THEIR BID AN ADDITIONAL LINE ITEM (LUMP SUM) FOR THE INSTALLATION OF FIRE SUPPRESSION PIPING LEADING UP TO THE THE TRANSIENT DOCK (DOCK G). THIS WORK INCLUDES REPLACING THE DRY STANDPIPE SYSTEM AND ASSOCIATED PLUMBING CONNECTIONS ON DOCKS A THROUGH E. THIS WORK REQUIRES THE REMOVAL AND REINSTALLATION OF DECK BOARDS AS NECESSARY.

NOTE:

1. CONTRACTOR SHALL PROVIDE FOR TESTING AND CERTIFICATION OF COMPLETED FIRE SUPPRESSION SYSTEM AT THE COMPLETION OF THE WORK.

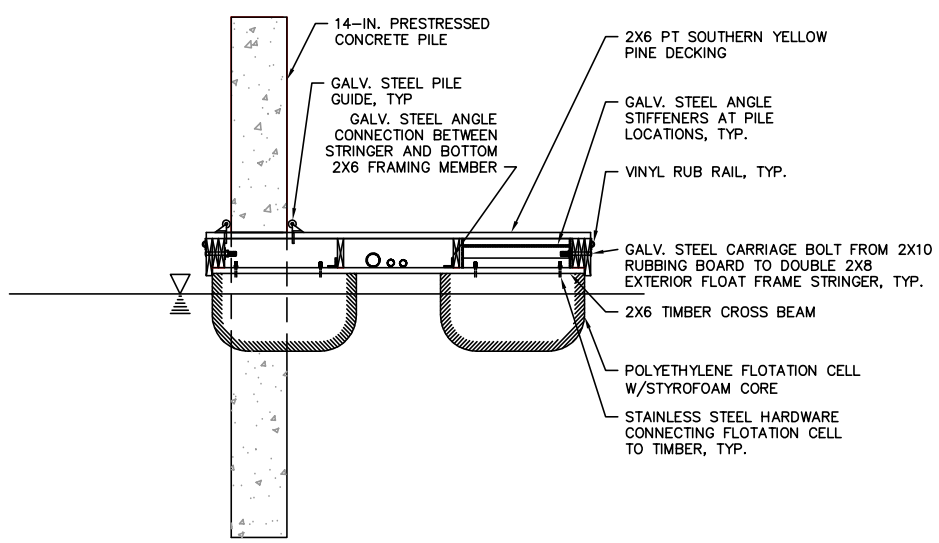

C1 TYPICAL EXISTING CROSS SECTION
SCALE: 1:2

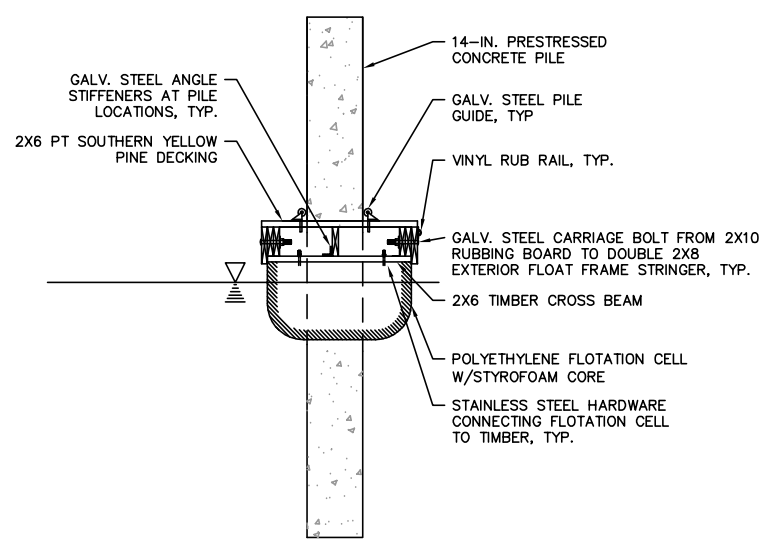

C3 TYPICAL EXISTING CROSS SECTION
SCALE: 1:2

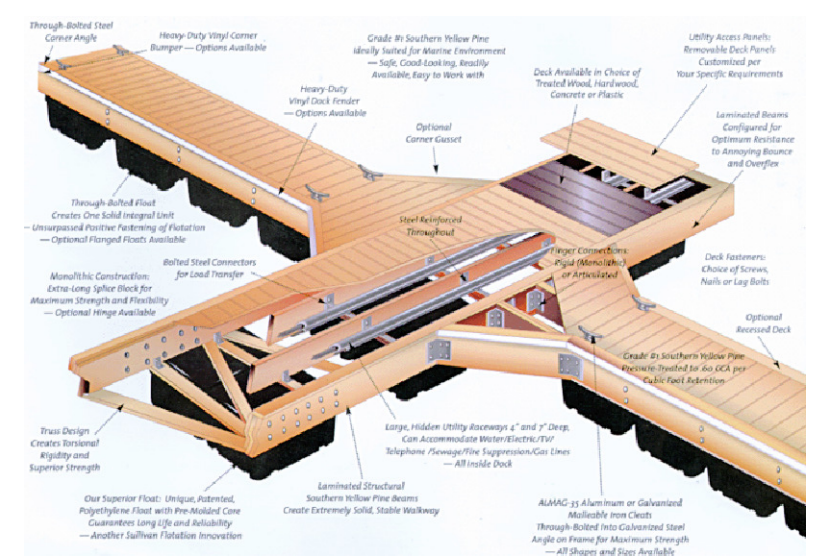

EXISTING TYPICAL DOCK CONFIGURATION
(AS MANUFACTURED BY SULLIVAN FLOTATION SYSTEMS, INC.)
SCALE: NTS

McSweeney Engineers
123 Cannon Street
Charleston, SC 29403
(843) 974–5621
www.mcsweeneyengineers.com

REPAIRS AND UPGRADES TO DOWNTOWN MARINA
BEAUFORT, SOUTH CAROLINA

DESIGNED BY:	WDB
DRAWN BY:	WDB
CHECKED BY:	DBM
DATE:	10/21/15
JOB NUMBER:	COB–M–T2
DRAWING FILE:	MARINA.DWG
REV.	DATE:

S-01
SITE PLAN AND DETAILS