MEETING AGENDA

The City of Beaufort

HISTORIC DISTRICT REVIEW BOARD

Wednesday, November 8, 2023, 2:00 P.M.

City Hall, Council Chambers, 2nd Floor – 1911 Boundary Street, Beaufort, SC

Please click the link below to access the webinar:
https://us02web.zoom.us/j/84345220337?pwd=Q3BaRklZc1B4SS9RRWpZc1FQUk5RZz09
Password: 097272 Meeting ID: 843 4522 0337 Call in Phone #: 1+929 205 6099

STATEMENT OF MEDIA NOTIFICATION: "In accordance with South Carolina Code of Laws, 1976, Section 30-4-80(d), as amended, all local media were duly notified of the time, date, place, and agenda of this meeting."

Note: A project will not be reviewed if the applicant or representative is not present at the meeting.

I. **Workshop - HRB Training** **12:00 pm – 2:00 pm**

II. **Call to Order:** **2:00 pm**

III. **Welcome New Board Members**

IV. **Election of Officers**

V. **Review of Minutes:**

A. **September 13, 2023 Meeting Minutes**

VI. **Applications:**

A. **1113 Craven Street, PIN R120 004 000 0774 0000,** alterations/additions
Applicant: Ashley Randolph Allison Ramsey Architects, Inc. (23-64 HRB.1)

The applicant is requesting final approval to replace the concrete staircase with a wooden staircase that is aligned with the code, the installation of French doors on the east side of the house and a window at the rear of the house.

B. **316 Federal Street, PIN R120 004 000 0840 0000,** addition/new construction
Applicant: Ashley Randolph Allison Ramsey Architects, Inc. (23-71 HRB.1)

The applicant tis requesting preliminary approval for alterations and additions to the existing structures.

C. **600 Wilmington Street, PIN R120 004 000 0599 0000,** new construction
Applicant: Ashley Randolph Allison Ramsey Architects, Inc. (23-55 HRB.1)

The applicant is requesting final approval of two blocks of redevelopment in the Historic District.

D. **614 Prince Street, PIN R120 004 000 1030 0000,** new construction
Applicant: Lauren Kelly, Moser Design (23-37 HRB.1)

The applicant is requesting final approval for construction of a new single-family residence.

VII. Adjournment

Historic District Review Board
Meeting Minutes – September 13, 2023

CALL TO ORDER 00:00:46

A meeting of the Historic District Review Board was held in-person on Wednesday, September 13, 2023.

ATTENDEES

Members in attendance: Jeremiah Smith (Chairman), Mike Sutton (Vice-Chair), Rita Wilson, and Maxine Lutz. Michelle Prentice was absent.

Staff in attendance: Curt Freese, Community Planning Director, Jeremy Tate and Maria Short (Meadors Architecture) (Virtual)

REVIEW OF MINUTES 00:01:00

Motion (0:01:15): Ms. Lutz made a motion for approval of [August 9] minutes; seconded by Ms. Wilson. The motion passed unanimously (4-0).

All Historic District Review Board Meeting minutes are recorded and can be found on the City's website at http://www.cityofbeaufort.org/AgendaCenter. Audio recordings are available upon request by contacting the City Clerk, Traci Guldner at 843-525-7024 or by email at tgundler@cityofbeaufort.org.

APPLICATIONS

A. **100 Laurens Street, PIN R120 004 000 0656 0000,** Alterations **00:01:40**
Applicant: Dr. & Mrs. Mark Guilloud (23-58 HRB.1)

The applicant is requesting final approval for alterations to a single-family residence.

Motion 1 (0:38:38): Ms. Lutz made a motion to approve the application as submitted with the condition that the administrator look at the ordinance 8.4 and determine if this is a significant site to do an archaeological survey; seconded by Mr. Sutton. Motion passed unanimously (4-0).

B. **1313 Congress Street, PIN R120 004 000 0047 0000,** Alterations **00:39:20**
Applicant: Simons Young, Principal Architect, Simons Young + Associates (23-57 HRB.1)

The applicant is requesting final approval for alterations to a single-family residence.

Motion 1 (0:53:10): Mr. Sutton made a motion to support [approval of the application] as presented with the alteration of possibly flipping the ramp to make it more accessible to the public and staff conditions as noted. Motion passed unanimously (4-0).

C. **1014 North Street, PIN R120 004 000 0780 0000,** Alterations/Addition **00:53:45**
Applicant: Charlie Heyman for David & Bria Bracewell (23-49 HRB.1)

The applicant is requesting final approval for alterations to a single-family residence.

Motion 1 (1:39:30): Ms. Lutz made a motion for final approval to restore the house with the exception of allowing the applicant to apply a brick veneer on the front steps and instead requiring them to remove the cement coating and see what they can do to restore the bricks that are underneath the cement coating, and also that [the Board] needs to see that the gable is drawn as it was as the applicant has found it was originally, and to allow gaslights on the front porch. Additionally, if the applicant finds that the bricks are not repairable, they will be allowed to return the front steps to the cement material; seconded by Ms. Wilson. Motion passed unanimously (4-0).

Mr. Smith recused himself from the board, Mr. Sutton acts as chairman.

D. **1106 Craven Street, PIN R120 004 000 845A 0000,** New Construction **01:45:25**
Applicant: Cooter Ramsey, Allison Ramsey Architects, Inc. (23-24 HRB.2)

The applicant is requesting preliminary approval for construction of a new duplex.

Motion 1 (2:10:26): Mr. Sutton made a motion to approve [this application] with staff comments noted for conceptual [approval]; seconded by Ms. Lutz. Motion passed (2-1), with Ms. Wilson in opposition.

E. **Block Redevelopment – Monson, Wilmington, Prince, and King Streets, PIN R120 004 000 1009 0000 & PIN R120 004 000 0598 0000,** New Construction **02:11:10**
Applicant: Ashley Randolph, Allison Ramsey Architects, Inc. (23-56 HRB.1)

The applicant is requesting conceptual approval for the development of two blocks bounded by Monson Street on the west, Harrington Street on the east, Prince Street on the north, and King Street on the south.

Motion 1 (3:08:20): Ms. Lutz made a motion for conceptual approval to this project with staff comments except #1; seconded by Mr. Sutton. Motion passed unanimously (3-0).

Mr. Smith rejoined the Board as chairman.

DISCUSSION 03:10:00

The Board and staff discussed Mr. Smith's and Ms. Lutz's continuing terms on the Board. Ms. Lutz noted that it would be helpful to note the date of the buildings and their status as a contributing or noncontributing structure on future staff reports.

ADJOURNMENT 03:11:15

Motion 1 (3:11:15): Mr. Sutton made a motion to adjourn the meeting. Mr. Smith adjourned the meeting at 5:12 pm.

1113 Craven Street

STAFF REPORT: 1113 Craven Street - FINAL Approval

DATE: 11/08/23

GENERAL INFORMATION	
Applicant:	**Ashley Randolph on behalf of Kathryn & David Scadden**
Site Location/Address:	**1113 Craven Street; R120 004 000 0774 0000**
Applicant's Request:	**The applicant is requesting final approval to replace the concrete staircase with a wooden staircase that is aligned with the code, the installation of French doors on the east side of the house and a window at the rear of the house.**
Current Zoning:	**T4-HN**

ZONING DISTRICT INFORMATION	
	T4-HN
Lot Width at Setback:	**40 ft.**
Max Lot Coverage:	**55%**
Min. Frontage Build Out	**75% of lot area**
Front Setback	**Avg. setback on the block**
Side Setback	**5 ft on corners/6 ft. interior**
Rear Setback	**15 ft min**
Building Height:	**3 stories max**

SURROUNDING ZONING, LAND USE AND REQUIRED BUFFERS		
Adjacent Zoning	**Adjacent Land Uses**	**Setbacks for Adjacent Zoning /Buffer required if rezoned**
North: T-4 HN	**Historic Homes**	**N/A**
South: T-4 N	**Homes**	**N/A**
East: T-4 HN	**Historic Homes**	**N/A**
West: T-4 HN	**Historic Homes**	**N/A**

Background: The applicant is requesting final approval to replace the concrete staircase with a wooden staircase that is aligned with the code, the installation of French doors on the east side of the home and a window at the rear of the 1113 Craven St. The residence, also known as the Milton Maxcy House, is a contributing structure constructed circa 1815 in the Bluff neighborhood. This alteration has the potential to retain the historic elements of the home. This project was first submitted at the September 6, 2023 HRTC meeting and the applicants have been cooperative. Staff supports the proposed alterations.

FINDINGS AND RECOMMENDATIONS

Staff Recommendation:

Staff recommends Final approval of the proposed alterations at 1113 Craven Street, in that it satisfies the intent of the Beaufort Preservation Manual and requirements of the Beaufort Code, with the following conditions:

1. **The door selected on the cutsheet provided does not match the door shown on the elevation drawings. Staff recommends the applicant use the 9 lite door as shown on the elevation drawings.**

DEVELOPMENT REVIEW PROCESS

HISTORIC REVIEW BOARD APPLICATION

Community & Economic Development Department
1911 Boundary Street, Beaufort, South Carolina, 29902
p. (843) 525-7011 / f. (843) 986-5606
www.cityofbeaufort.org

☐ Staff Review
☐ Board Review

Application Fee:
see attached schedule

OFFICE USE ONLY: **Date Filed:** _____ **Application #:** _____ **Zoning District:** _____
BCAGHS Survey: ☐ **Yes** ☐ **No**

Schedule: The Historic Review Board (HRB) typically meets the 2nd Wednesday of each month at 2pm. The complete schedule, along with the list of deadlines, may be found here - http://www.cityofbeaufort.org/historic-review-board.aspx

Submittal Requirements: All forms and information shall be submitted digitally. In addition to a complete application form, applicants shall submit the required items according to the checklists on the subsequent page.

Review Request: ☐ Conceptual ■ Preliminary ■ Final ☐ Bailey Bill Approval* ☐ Change After Certification
**Requires a Bailey Bill – Part A Preliminary Review Application Form*

Pursuant to Section 6-29-1145 of the South Carolina Code of Laws, is this tract or parcel restricted by any recorded covenant that is contrary to, conflicts with, or prohibits the activity described in this application? ☐ **Yes** ■ **No**

Applicant, Property, and Project Information

Applicant Name: Ashley Randolph, Allison Ramsey Architects

Applicant Address: 1003 Charles Street, Beaufort, SC

Applicant E-mail: ashleyr@allisonramseyarchitect.con Applicant Phone Number: 843-986-0559

Applicant Title: ☐ Homeowner ☐ Tenant ■ Designer ☐ Engineer ☐ Developer

Owner (if other than the Applicant): Kathryn & David Scadden

Owner Address: 1113 Craven Street, Beaufort, SC

Project Name: 1113 Craven Street

Property Address: 1113 Craven Street, Beaufort, SC

Property Identification Number *(Tax Map & Parcel Number):* R120 004 000 0774 0000

Date Submitted: 09-27-2023

Certification of Correctness: I/we certify that the information in this application is correct.

Applicant's Signature: Ashley Randolph Date: 09-27-2023

Owner's Signature: _____ Date: _____

(The owner's signature is required if the applicant is not the owner.)

DEVELOPMENT REVIEW PROCESS

HISTORIC REVIEW BOARD APPLICATION

Community & Economic Development Department
1911 Boundary Street, Beaufort, South Carolina, 29902
p. (843) 525-7011 / f. (843) 986-5606
www.cityofbeaufort.org

Project Name: 1113 Craven Street

Property Size in Acres: 0.53 acres Proposed Building Use: Single-Family

Nature of Work (check all that apply):

☐ New Construction, Primary Structure ☐ New Construction, Primary Structure ■ Alterations / Additions

☐ Demolition* ☐ Relocation* **Demolition and Relocation requires a public hearing*

Building Square Footage (if multiple buildings, please list each one and their square footage by floor):
N/A

Is this project a redevelopment project: ☐ Y ☑ N

Are there existing buildings on the site? ☑ Y ☐ N if yes, will they remain? ☑ Y ☐ N

Provide a brief Project Narrative (if requesting Bailey Bill Approval, this section may be left blank):

Replace concrete stair with wood stair up-to-code
and more fitting with style of existing historic house.
Addition of French Doors at ground floor on East elevation and window at rear.

CONTACT INFORMATION –

Attention: Julie A. Bachety, Administrative Assistant II
City of Beaufort Department of Planning & Development Services
1911 Boundary Street, Beaufort, South Carolina 29902
E-Mail: jbachety@cityofbeaufort.org: | Phone: (843) 525-7011 | Fax: (843) 986-5606

Revised April 16, 2021

HISTORIC DISTRICT REVIEW BOARD CERTIFICATE OF APPROPRIATENESS

Application Requirements

The Beaufort Code applies to all projects; the Historic District Infill Design Guidelines in Section 4.7 apply to new construction in the Historic District.

The Historic Review Board also utilizes the following documents when evaluating projects:

- *The Beaufort Preservation Manual* & *Supplement:* these standards apply to New Construction, Alterations and Additions to Contributing Structures, and Demolition located everywhere in the Historic District except the Northwest Quadrant.
- *The Northwest Quadrant Design Guidelines:* these standards apply to New Construction, Alterations and Additions to Contributing Structures, and Demolition located in the Northwest Quadrant of the Historic District
- The Secretary of the Interior's *Standards for Rehabilitation:* these standards apply to all modifications to Contributing Structures throughout the Historic District

All documents can be found online at www.cityofbeaufort.org

- The Beaufort Code can be found here: http://www.cityofbeaufort.org/434/Zoning
- Documents specific to the Historic District, a map of the Historic District and neighborhoods, and the list of Contributing and Non-Contributing Structures can be found here: http://www.cityofbeaufort.org/350/1997-Beaufort-County-Historic-Sites-Surv

NOTE 1: If a New Construction project also requires major demolition a separate application is required. (Refer to the Checklist for Demolition on page 3).

NOTE 2: Applications will not be considered complete until all the required items have been submitted. Incomplete applications will not be placed on the agenda.

NOTE 3: Applications are to be compiled in the order in which the applicant plans to present the application to the Board during the meeting.

Submission Requirements for New Construction and Alterations or Additions

Please submit DIGITAL FILES ONLY via email to: jbachety@cityofbeaufort.org

*Initial submittals should show existing and proposed conditions. For all subsequent submittals, architectural drawings should show and clearly label existing conditions, the previous proposal, and the current proposed. Each version of the same drawing should be adjacent to the others in the application for easy review.

***This Application Requirements Checklist MUST be included in applications, with submitted items checked.**

Conceptual Review

- ☐ **Existing Context:** Color photographs of the existing structure and the adjacent structures.
- ☐ **Plat:** A plat indicating the tax map and parcel number, existing structure(s), setbacks, existing trees, and proposed construction footprint.
- ☐ **Site Plan:** A site plan, to scale, indicating the location of the existing structure on the lot, proposed new structure, any site modifications (parking, paths, landscaping, tree removal, etc…), any new or existing mechanical equipment and screening area, and percentage of the total impervious paving. The plan should also include any connections to the public right of way (street and/or sidewalk), and grade elevations of the street and/or sidewalk and the proposed construction at the first floor.
- ☐ **Design:** One or more drawings that convey the intent of the proposal. This may include: floor plans, elevations, and building sections. They should display massing and scale of new construction and how it relates to the existing structure or surrounding context. For new construction and additions, this drawing should include a street elevation and/or a street section showing height and width relationships to existing adjacent buildings.
- ☐ **3-D Rendering:** A 3-D rendering, or physical scale model, showing the height, mass and scale of the proposed building in its context is required for all structures except single-family and 2-3 unit residential buildings.
- ☐ **Pre-Application Conference:** A Pre-application conference is required for all commercial new construction and substantial commercial renovation projects. The requirement for an Archeological Impact Assessment will be determined at this meeting.

Preliminary Review: All the documents required for Conceptual Review, PLUS:

- ☐ **Floor Plans:** Proposed floor plans of all levels of the building, including square footage. For Alterations or Additions, existing conditions drawings of the floor plan are also required, showing the area and square footage affected by the addition.
- ☐ **Elevations:** Elevation drawings of all sides of the building, including heights – height above grade, floor-to-floor heights, eave height and ridge height (if applicable). For Alterations or Additions, existing conditions drawings of all four elevations are also required.
- ☐ **Color Rendering:** A colored version of at least one elevation, noting proposed materials and colors.
- ☐ Additional on-site representation, such as a height story pole, and corner staking of the foundation, may be required.
- ☐ A Certified Arborist report may be required if grand trees are affected by the project.

Final Review: All the documents required for Preliminary Review, PLUS:

- ☐ **Details:** A typical wall section(s), window details, door details, eave details, porch details, and any other details characteristic to the building are required.
- ☐ **Material Samples and Cut Sheets:** Applicant to submit cut sheets for all exterior building materials, to include roof and typical roof details, doors, windows, dryer vents, exterior lighting, etc. Samples of windows, lighting and building materials may be required at Staff's discretion.
- ☐ **Final Materials List:** A final list, including colors, is required.
- ☐ **Landscaping Plan:** A landscaping plan is required for commercial projects. It shall include a schedule detailing materials and colors of all plants and landscape materials, all existing trees, with the trees to be removed noted, existing and proposed grading, and any exterior lighting proposed.

Submission Requirements for Change After Certification

Please submit DIGITAL FILES ONLY via email to: jbachety@cityofbeaufort.org

Change After Certification:

- ☐ **Copy of Certificate of Appropriateness** received with previous approval.
- ☐ **Previously Approved Drawings:** Applicant to submit **complete** set of previously approved documents. Current proposed documents to be interlaced between previously approved documents and must be formatted to match previously approved. For example, previously approved elevations should be followed by current proposed. Drawings to be clearly noted as "Previously Approved" or "Current Proposed", and all proposed revisions in the current proposed drawings must be clouded and noted.

Submission Requirements for Demolition or Relocation

Please submit DIGITAL FILES ONLY via email to: jbachety@cityofbeaufort.org

Note: A public hearing must be held for Demolition or Relocation. All notification requirements must be met by the City.

- ☐ A written statement describing the history of the architectural significance of the structure to be demolished, the structural or physical condition of the structure, and the proposed use of the site after demolition or relocation. The statement should also include any recent attempt(s) to sell the property, or move the structure. A recent appraisal with comparisons is strongly encouraged. You may refer to *The Beaufort County Above Ground Resources Survey of 1997,* or consult city staff or the Historic Beaufort Foundation for verification of the date of constructionand historic information.
- ☐ Tax map or plat showing the location of the property
- ☐ Color photographs of all sides of the structure.
- ☐ Color photographs of adjoining properties.
- ☐ A written report by an engineer, regarding the structural condition of the building, is required ifthe reason for demolition is related to the structural integrity of the building.
- ☐ A landscaping plan/or conceptual redevelopment plan, is required.

HISTORIC DISTRICT REVIEW BOARD
FEE SCHDULE

(As of July 1, 2020)

BOARD REVIEW FEES:

Single-family residential projects (board review)	$100.00
Multifamily and commercial projects (board review)	$250.00
Change After Certification	$100.00
Demolition (whole structure)	$250.00
Special Board Meeting	$500.00

Post facto applications shall be triple the normal fee.

STAFF REVIEW FEES:

Single Family and 2/3-unit buildings not in a historic district are exempt.

Type 1

Renovations/Improvements (not including additions), ≤ 50% of the value of the structures

Value	Fee
Improvements ≤ $5,000	$50
Improvements > $5,000 but ≤ $25,000	$50 + 0.25% x value above $5,000
Improvements > $25,000	$100 + 0.20% x value above $25,000

Type 2

- Any single-family and 2/3-unit residential addition in a historic district: $50
- All other additions: $500 base fee + $0.05/square foot of addition.

Type 3

Review for new construction and for renovations/improvements totaling over 50% of the value of the structure:

- Single-family and 2-3 unit residential in the historic district
- ≤ 10,000 square feet: $500 base fee + 0.05/square foot of building

- > $10,000 square feet: $1,000 base fee + $0.05/square foot of building for the first 100,000 square feet of building. For additional square footage over 100,000, $0.02/square foot.

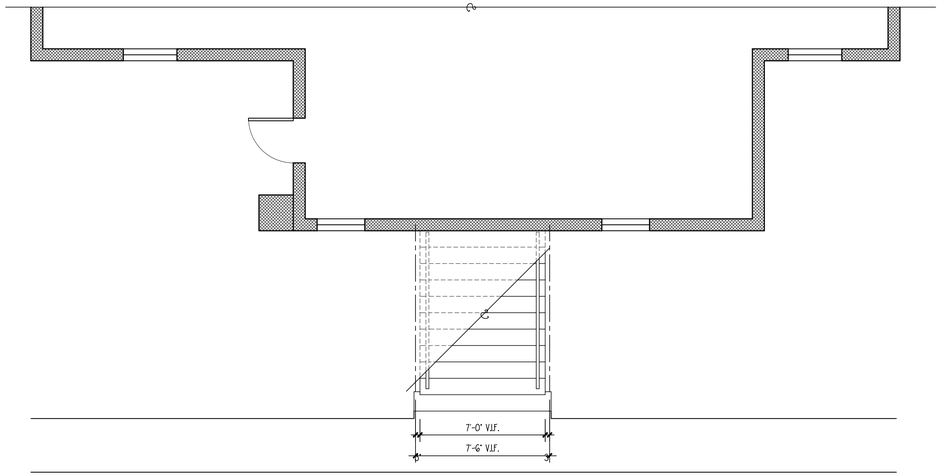

EXISTING GROUND FLOOR PLAN

SCALE: 1/4" = 1'-0"

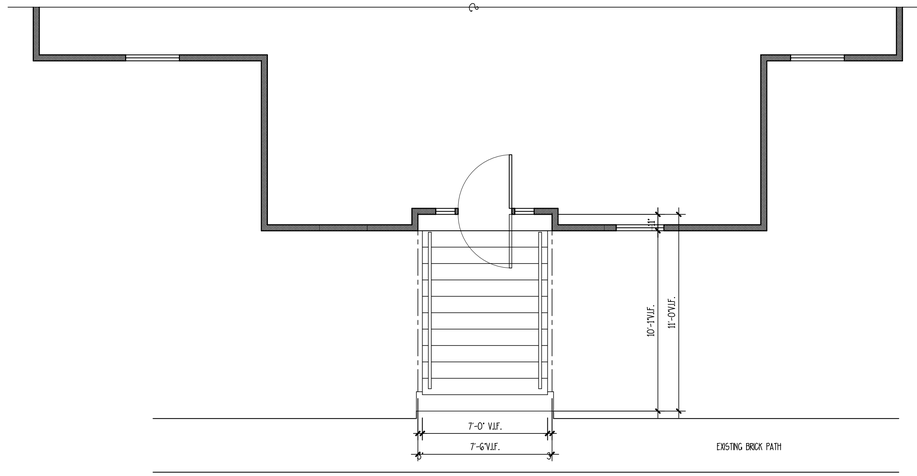

EXISTING FIRST FLOOR PLAN

SCALE: 1/4" = 1'-0"



EXISTING RIGHT ELEVATION

SCALE: 1/4" = 1'-0"



EXISTING REAR ELEVATION

SCALE: 1/4" = 1'-0"

1113 CRAVEN ST. - 23105

BEAUFORT, SOUTH CAROLINA

ALLISON RAMSEY Architects, PLLC creating sustainably timeless designs
1003 Charles St.
Beaufort SC, 29902
(843) 986-0559
www.allisonramseyarchitect.com

THIS PLAN HAS BEEN PREPARED TO MEET TOP PROFESSIONAL STANDARDS AND PRACTICES. HOWEVER, BUILDING CODES AND ENVIRONMENTAL CONDITIONS VARY FOR DIFFERENT LOCATIONS. IT IS THE RESPONSIBILITY OF THE PURCHASER OF THIS PLAN TO PERFORM THE FOLLOWING BY HOME CONSULTANTS FROM THIS PLAN.

- VERIFY COMPLIANCE WITH ALL LOCAL CODES
- VERIFY ALL DIMENSIONS PRIOR TO PROCEEDING WITH CONSTRUCTION
- PLANS INDICATE LOCATIONS ONLY; ENGINEERING EXPERTS SHOULD INCORPORATE ALL STRUCTURAL REQUIREMENTS.
- MISC. & PLUMBING LAYOUTS ARE NOT INCLUDED. THESE SHOULD BE OBTAINED FROM A LOCAL MECH. CONTRACTOR OR ENGINEER TO ENSURE COMPLIANCE WITH LOCAL CODE
- ARE THE ELEMENTS IN SUITE LOGICALLY FLOW TOGETHER FOR PARTICULAR NEEDS AND CONDITIONS.
- VERIFY ALL STRUCTURAL LOADINGS WITH LOCAL CODES AND ENGINEERING REQUIREMENTS

DATE:	08/8/2023
JOB NO.	23105
DWN. BY:	JAMS
DWG. NAME:	23105.DWG

Copyright 2023 by Allison Ramsey Architects, Inc. All rights reserved.

1

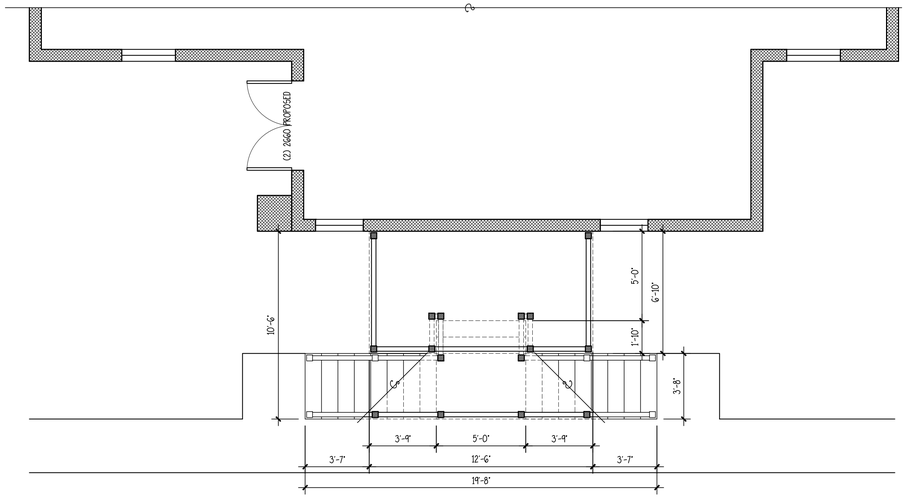

PROPOSED GROUND FLOOR PLAN

SCALE: 1/4" = 1'-0"

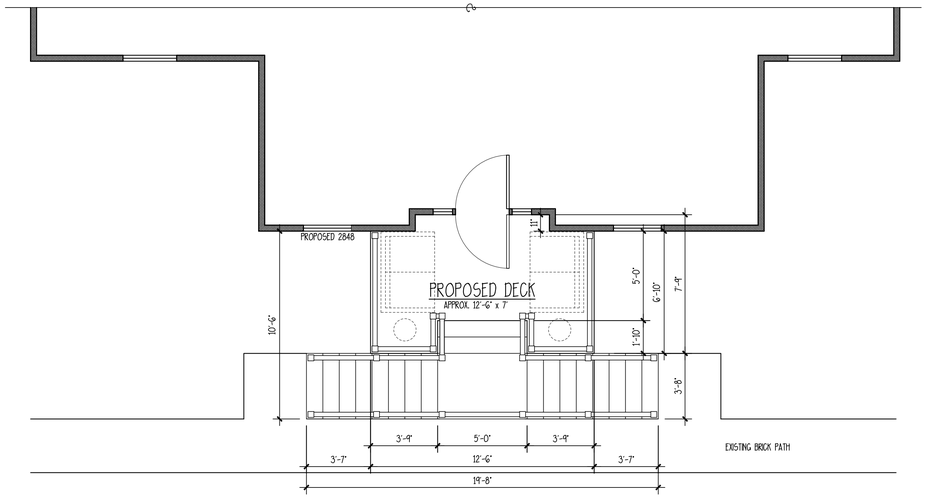

PROPOSED FIRST FLOOR PLAN

SCALE: 1/4" = 1'-0"



PROPOSED RIGHT ELEVATION

SCALE: 1/4" = 1'-0"



PROPOSED REAR ELEVATION

SCALE: 1/4" = 1'-0"

1113 CRAVEN ST. - 23105

BEAUFORT, SOUTH CAROLINA

ALLISON RAMSEY Architects, inc. creating sustainable timeless design
1003 Charles St.
Beaufort SC, 29902
(843) 986-0559
www.allisonramseyarchitect.com

THIS PLAN HAS BEEN PREPARED TO MEET TOP PROFESSIONAL STANDARDS AND PRACTICES. HOWEVER, BUILDING CODES AND ENVIRONMENTAL CONDITIONS VARY FOR DIFFERENT LOCATIONS. IT IS THE RESPONSIBILITY OF THE PURCHASER OF THIS PLAN TO PERFORM THE FOLLOWING BEFORE BEGINNING CONSTRUCTION. ALLISON RAMSEY ARCHITECTS, INC. ASSUMES NO LIABILITY FOR ANY HOME CONSTRUCTED FROM THIS PLAN.

- VERIFY ALL DIMENSIONS PRIOR TO PROCEEDING WITH CONSTRUCTION
- VERIFY COMPLIANCE WITH ALL LOCAL CODES
- PLANS INDICATE LOCATIONS ONLY; ENGINEERING EXPERTS SHOULD INCORPORATE ALL SPECIFIC DESIGNS.
- MISC. ITEMS, PLUMBING LAYOUTS ARE NOT INCLUDED. THESE SHOULD BE OBTAINED FROM A LOCAL MECH. CONTRACTOR OR ENGINEER TO ENSURE COMPLIANCE WITH LOCAL CODE
- ANY TREE ELIGIBLE FOR SIZE CONSIDERATION TO BE REMOVED SHALL BE SURVEYED FOR SIZE & LOCATION & APPROVED BY LOCAL ZONING AUTHORITY PRIOR TO REMOVAL

DATE:	08/8/2023
JOB NO.	23105
DWN. BY:	JWAS
DWG. NAME:	23105.DWG

Copyright 2023 by Allison Ramsey Architects, Inc. All rights reserved.

VICTORBILT HISTORIC SERIES

PUTTY GLAZED WOOD WINDOWS
NOW WITH OPTIONAL HIDDEN BALANCE SYSTEM



- *ALL PARTS DIP-TREATED FOR LONG LIFE & ROT RESISTANCE -WOODLIFE 111®*
- *MORTISE & TENON CONSTRUCTION*
- *TRUE DIVIDED LITES*
- *CHECK RAIL, NON-TILT DESIGN*
- *PUTTY GLAZED STOP*
- *BACKBED GLUE WITH GLAZING POINTS*
- *3/16” BARS BETWEEN GLASS, OR*
- *7/16” BARS BETWEEN GLASS*
- *SOLID PINE MATERIAL, STAIN GRADE*
- *PRE-GLAZE PRIMING OPTION*
- *HIDDEN BALANCE SYSTEM HAS NO VINYL BALANCE—ALL WOOD*
- *DOUBLE HUNG UP TO 3-6 X 7-2, INCLUDING CUSTOM SIZES AND LITE PATTERNS*
- *SASH LOCKS AVAILABLE*
- *ALSO IN PICTURE WINDOWS, TRANSOMS*
- *OPTIONAL BULL NOSE*
- *OPTIONAL WIDE CASINGS*

Window quality

since 1944

CONTACT OUR SALES TEAM TODAY:

Dealers Supply & Lumber Company

(864) 242-6571

(864) 242-0433 fax

www.victorbilt.com

estatewindows@victorbilt.com

An FSC COC Certified Company

VictorBilt

Dealers Supply & Lumber Company, Inc.

VictorBilt Hidden Balance System*









HAND MADE QUALITY AND CRAFTSMANSHIP IN STOCK AND READY FOR DELIVERY

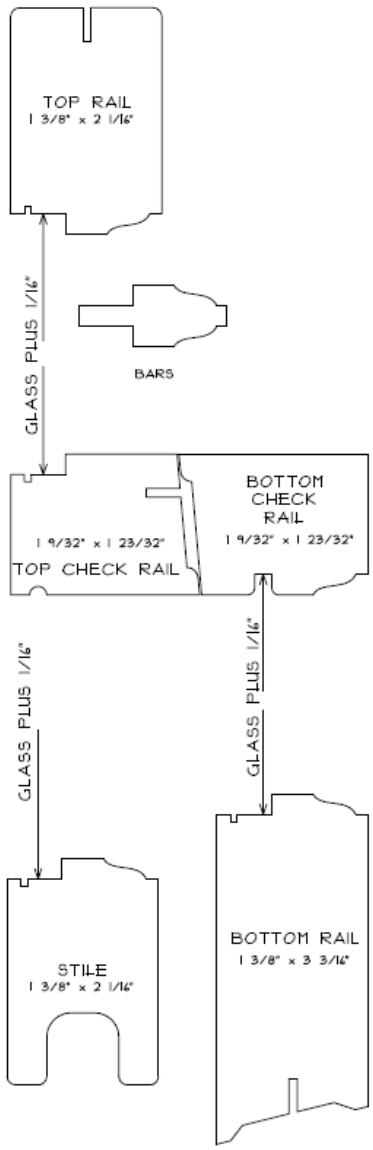

From our first days in the millwork business, VictorBilt has been providing these classic wood windows, and with the advancements in wood treating through Woodlife 111®, customers can be assured that they have a window built to last.

HIDDEN BALANCE SYSTEM DETAILS

- No Vinyl Balance, for All Wood Presentation
- Inverted Spring secured to sash with clip secured to jamb—all hidden during normal operation
- Double Hung Standard
- Wood Parting Stop
- Full Travel Sash
- Available as Sash Pack to fit existing frames



Restoration Locks

Side Jamb detail with Hidden Balance



For more information please call us, speak with your salesperson, or visit
www.victorbilt.com
864-242-6571 ofc
864-242-0433 fax

VictorBilt
Dealers Supply & Lumber Company, Inc.

Dealers Supply & Lumber Company, Inc.

HISTORIC SERIES

VictorBilt Double Hung SSB Putty Glazed Sash

True to the style of the traditional single glazed wood windows, Dealers Supply & Lumber Company, Inc. produces the VictorBilt Historic Series, a double hung putty glazed sash. Built as a check rail, non-tilt window, the sash parts and exterior window frame parts are treated with an exclusive wood preservative, WOODLIFE 111. This process allows the sash to meet the standards for the Hallmark program of the WDMA.

In addition, the sash can be primed before glazing to provide additional protection, while the exterior frame parts already primed.

Muntin bars can be either the 3/16" style or the 7/16" style and follow the same treatment process.

Please see attached drawings of the sash parts.

Dealers Supply & Lumber Co, Inc. ● 105 Airport Drive ● Greenville, SC 29607
864-242-6571 ● 864-242-0433 FAX
www.dealerssupplyandlumber.com

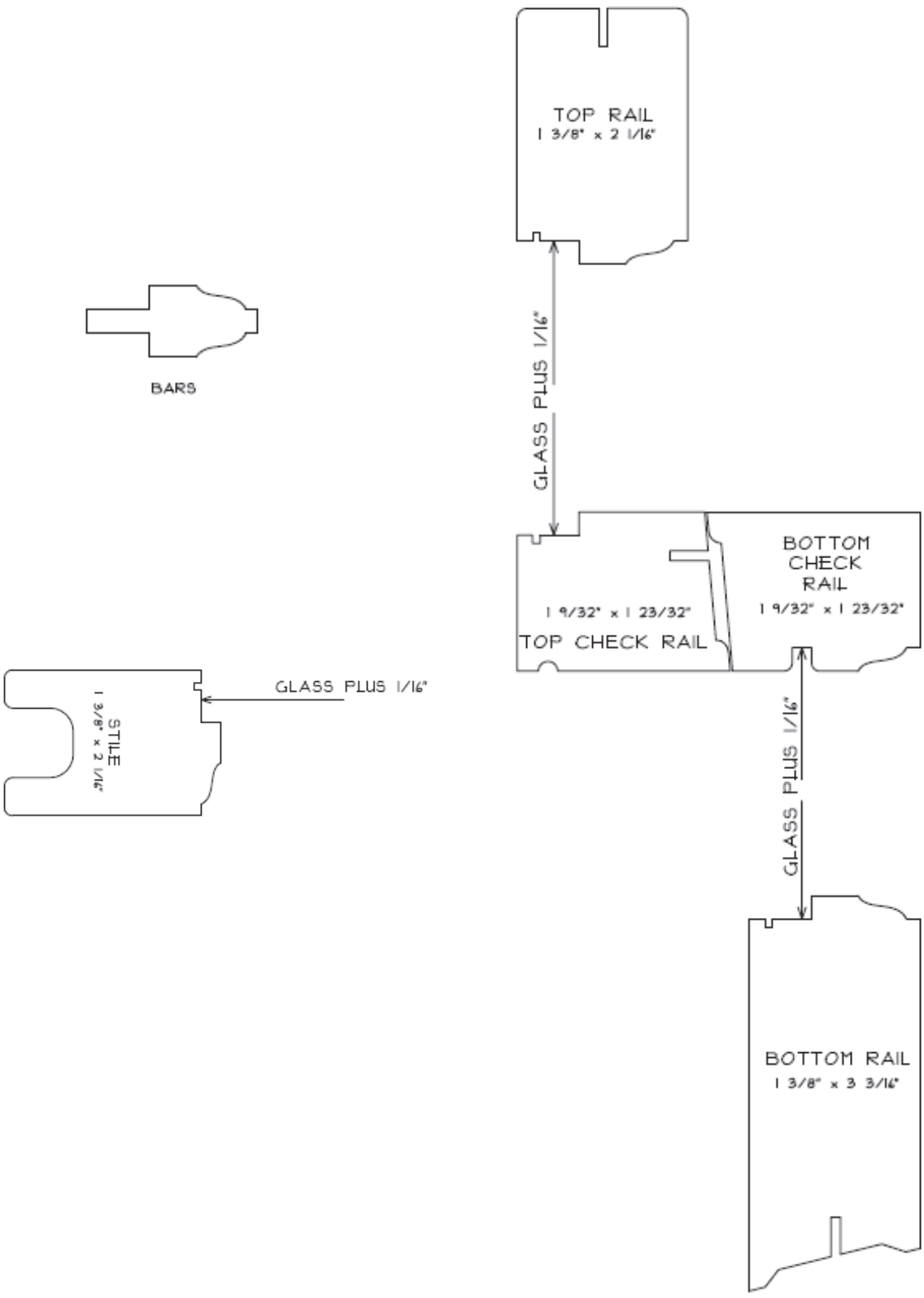

VictorBilt
Dealers Supply & Lumber Company, LLC
105 Airport Road, PO Box 5025, Greenville, SC 29606

Historic series

CROSS SECTIONS

2/8 x 4/6 6x6 SSB

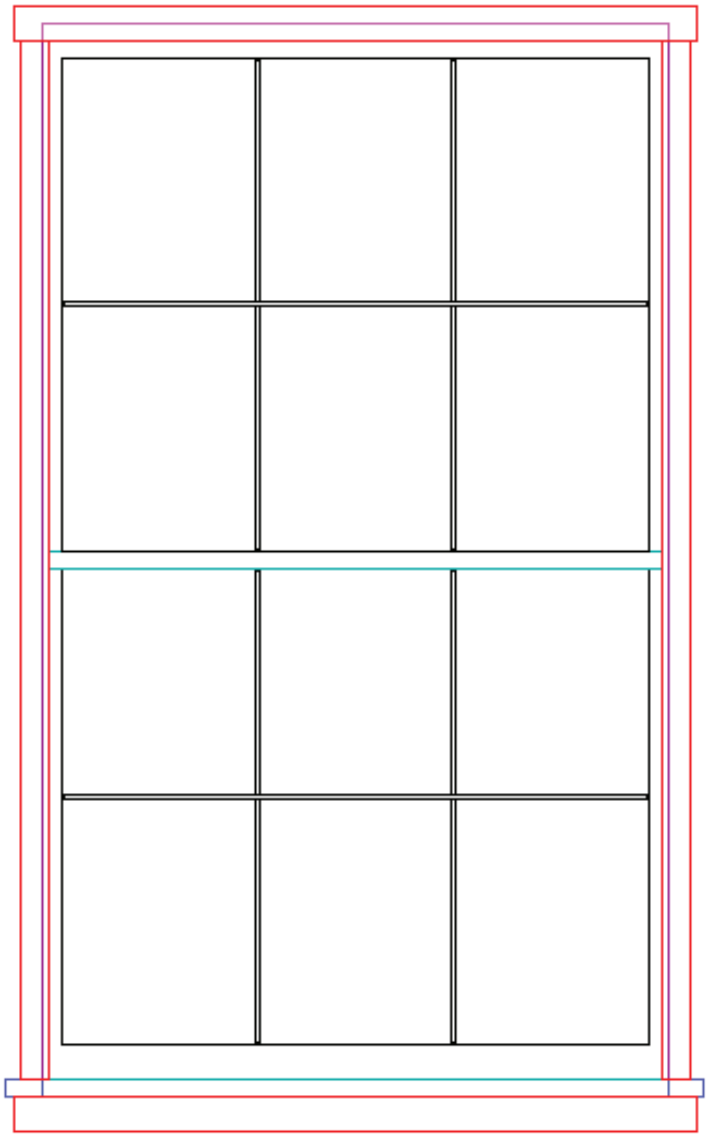

VictorBilt
Dealers Supply & Lumber Company, LLC
105 Airport Road, PO Box 5025, Greenville, SC 29606

Historic series

ELEVATION (TYP)

VICTORBILT HISTORIC SERIES PUTTY GLAZED BARS

VictorBilt Historic Series Putty Glazed bars are designated by the "Between the Glass" measurements shown as "BG", and the three choices are shown below for clarification. For example, the 3/16" BG Bar is 9/16" overall width, with 3/16" of bar between the glass.

3/16" BG BAR

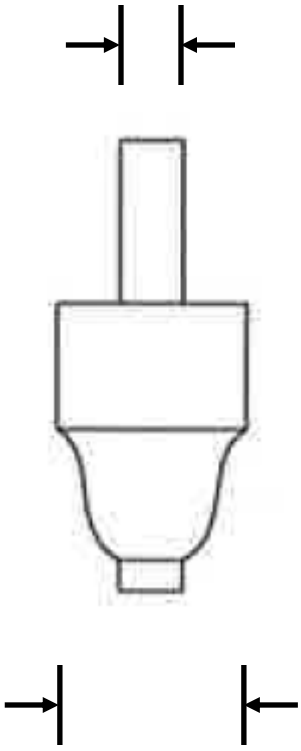

9/16" overall

7/16" BG BAR

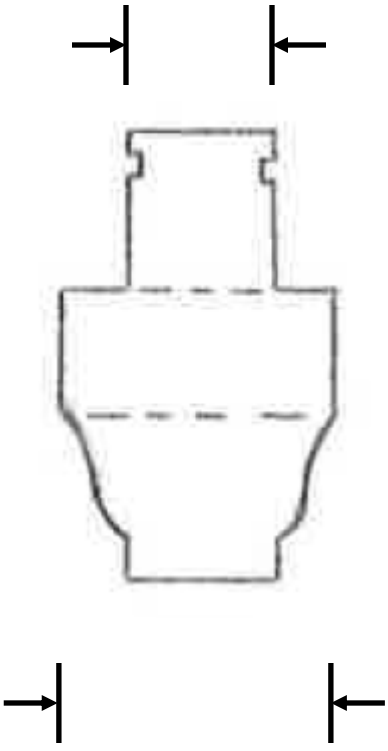

13/16" overall

7/8" BG BAR

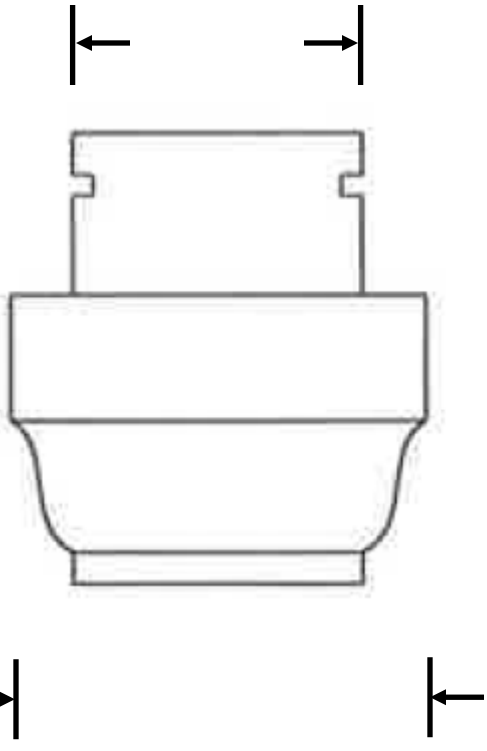

1-1/4" overall

(864) 242-6571
(864) 242-0433 fax
www.victorbilt.com
info@victorbilt.com

VictorBilt
Dealers Supply & Lumber Company, LLC



Door 4621LEFRE (IG) in Fir with Modified Ovolo Sticking



Door **512FRE (SG)** in Fir with Modified Ovolo Sticking



Door **46216LTLEFRE (Low-E)** in Fir with Ovolo Sticking



Door **5512FRE IG** in Fir with Modified Ovolo Sticking



Door **410FRE (SG)** in Fir with Ovolo Sticking



Door **5512LEFRE (IG)** in Fir with Ovolo Sticking



Door Warranty, Installation & Care Information

Please see pages 30-34



DOOR SIZE STOCKING TABLE

4612AFPFRE	6-8	7-0	8-0
3-0	●		
4612FPFRE	**6-8**	**7-0**	**8-0**
2-8	●		
3-0	●		●
4632FPFRE	**6-8**	**7-0**	**8-0**
3-0	●		●
4662FPFRE	**6-8**	**7-0**	**8-0**
3-0	●		●
4662BGFRE	**6-8**	**7-0**	**8-0**
3-0		●	
4697LEFRE	**6-8**	**7-0**	**8-0**
3-0	●		●
5444FRE	**6-8**	**7-0**	**8-0**
2-4	●	●	
2-6	●	●	
2-8	●	●	
3-0	●	●	
5060FRE	**6-8**	**7-0**	**8-0**
2-6	●		
2-8	●		
3-0	●	●	
4082FRE	**6-8**	**7-0**	**8-0**
3-0			
5010FRE	**6-8**	**7-0**	**8-0**
2-6	●		
2-8	●		
3-0	●	●	
944FRE	**6-8**	**7-0**	**8-0**
2-4	●		
2-6	●	●	
2-8	●	●	
3-0	●	●	
2020FRE	**6-8**	**7-0**	**8-0**
2-6	●		
2-8	●		
3-0	●	●	
2035FRTE	**6-8**	**7-0**	**8-0**
3-0			
2045FRE	**6-8**	**7-0**	**8-0**
2-6	●		
2-8	●		
3-0	●	●	
2134FRE	**6-8**	**7-0**	**8-0**
2-6	●		
2-8	●		
3-0	●	●	
5031FRE	**6-8**	**7-0**	**8-0**
2-6	●	●	
2-8	●	●	
3-0	●	●	
5130FRE	**6-8**	**7-0**	**8-0**
1-6	●	●	
2-0	●	●	
2-4	●	●	
2-6	●	●	●
2-8	●	●	●
2-10	●	●	
3-0	●	●	●
3-6		●	
4-0	●	●	

9130FRE	6-8	7-0	8-0
2-0	●		
2-6	●	●	
2-8	●	●	
3-0	●	●	
5944FRE	**6-8**	**7-0**	**8-0**
2-6	●	●	
2-8	●	●	
3-0	●	●	
5144LEFRE	**6-8**	**7-0**	**8-0**
2-6	●	●	
2-8	●	●	●
3-0	●	●	●
2130FRE	**6-8**	**7-0**	**8-0**
1-6	●	●	●
1-8	●		●
2-0	●	●	●
2-4	●	●	●
2-6	●	●	●
2-8	●	●	●
2-10		●	
3-0	●	●	●
3-6		●	
4621LEFRE	**6-8**	**7-0**	**8-0**
3-0	●		●
512FRE	**6-8**	**7-0**	**8-0**
2-0	●		
2-6	●		
2-8	●		
2-10		●	
3-0	●	●	
46216LTLEFRE	**6-8**	**7-0**	**8-0**
2-0	●		●
2-4	●		●
2-6	●		●
2-8	●		●
3-0	●		●
5512FRE	**6-8**	**7-0**	**8-0**
2-0		●	
2-4		●	
2-6		●	
2-8		●	
410FRE	**6-8**	**7-0**	**8-0**
2-6	●		●
2-8	●		●
3-0	●		●
5512LEFRE	**6-8**	**7-0**	**8-0**
3-0		●	
4598BGFRE	**6-8**	**7-0**	**8-0**
3-0	●		
5621LEFRE	**6-8**	**7-0**	**8-0**
1-6		●	●
2-0		●	●
2-4		●	
2-6	●	●	●
2-8	●	●	●
3-0	●	●	●
4509LEFRE	**6-8**	**7-0**	**8-0**
3-0	●		
5515FRE	**6-8**	**7-0**	**8-0**
2-6	●	●	
2-8	●	●	
2-10	●		

5515FRE	6-8	7-0	8-0
3-0	●	●	
3-6		●	
5510FRE	**6-8**	**7-0**	**8-0**
2-0	●	●	
2-4	●	●	
1510FRE	**6-8**	**7-0**	**8-0**
2-0	●	●	
2-4	●	●	
2-6	●	●	
2-8	●	●	
3-0	●	●	
5019LEFRE	**6-8**	**7-0**	**8-0**
1-6		●	
2-0		●	●
2-4		●	●
2-6	●	●	●
2-8	●	●	●
3-0	●	●	●
1501FRE	**6-8**	**7-0**	**8-0**
2-0	●	●	
2-4	●	●	
2-6	●	●	
2-8	●	●	
3-0	●	●	
5001FRE	**6-8**	**7-0**	**8-0**
1-6	●	●	●
2-0	●	●	●
2-4	●	●	●
2-6	●	●	●
2-8	●	●	●
2-10	●	●	
3-0	●	●	●
3-6		●	
4001LEPE	**6-8**	**7-0**	**8-0**
1-6	●		
2-0	●		
2-4	●		
2-6	●		
2-8	●		
3-0	●		
4661VFRE	**6-8**	**7-0**	**8-0**
3-0	●		
412VFRE	**6-8**	**7-0**	**8-0**
3-0	●		
4661VAFRE	**6-8**	**7-0**	**8-0**
3-0	●		●
412VAFRE	**6-8**	**7-0**	**8-0**
3-0	●		
4082VFRE	**6-8**	**7-0**	**8-0**
3-0	●		
2PSTKAE	**6-8**	**7-0**	**8-0**
1-6		●	●
2-0		●	●
2-4		●	●
2-6		●	●
2-8		●	●
3-0		●	●
2PSTVGKAE	**6-8**	**7-0**	**8-0**
1-6		●	●
2-0		●	●
2-4		●	●
2-6		●	●

2PSTVGKAE	6-8	7-0	8-0
2-8		●	●
3-0		●	●
2PATKAE	**6-8**	**7-0**	**8-0**
1-6		●	●
2-0		●	●
2-4		●	●
2-6		●	●
2-8		●	●
3-0		●	●
2PATVGKAE	**6-8**	**7-0**	**8-0**
1-6		●	●
2-0		●	●
2-4		●	●
2-6		●	●
2-8		●	●
3-0		●	●
4704SL	**6-8**	**7-0**	**8-0**
12"	●		
5701FSL	**6-8**	**7-0**	**8-0**
12"		●	
5701LEFSL	**6-8**	**7-0**	**8-0**
12"		●	
1705SL	**6-8**	**7-0**	**8-0**
10"	●		
12"	●	●	
5GBGSL	**6-8**	**7-0**	**8-0**
10"	●		
12"	●		
4703CLESL	**6-8**	**7-0**	**8-0**
12"	●		
5621SL	**6-8**	**7-0**	**8-0**
10"	●		
12"	●	●	
1704SL	**6-8**	**7-0**	**8-0**
10"	●		
12"	●		
4798IGSL	**6-8**	**7-0**	**8-0**
12"	●		
3GBGSL	**6-8**	**7-0**	**8-0**
10"	●		
12"	●		
5702SL	**6-8**	**7-0**	**8-0**
10"	●		
12"	●	●	●
1703SL	**6-8**	**7-0**	**8-0**
10"	●		
12"	●	●	
9662FPSL	**6-8**	**7-0**	**8-0**
12"	●		
4661FPSL	**6-8**	**7-0**	**8-0**
12"	●		
4662FPSL	**6-8**	**7-0**	**8-0**
12"	●		

● *Indicates stocking item.*

OPTIONS, FINISHES & TREATMENTS



Door Cross Sections

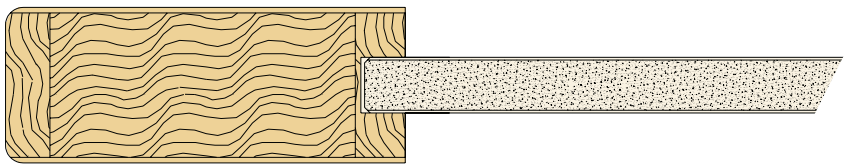

Flat Panel with Square Sticking

Flat Panel with Ovolo Sticking

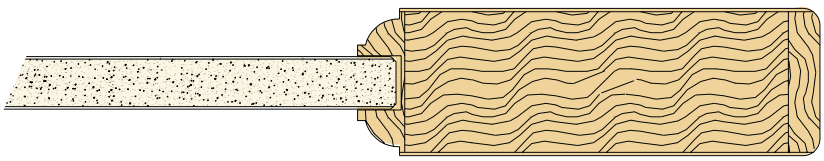

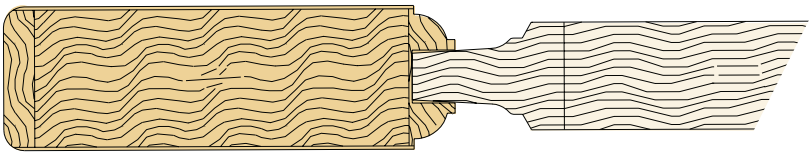

Raised Panel with Ovolo Sticking

The Premium Difference

Premium Options set new standards in durability and long-lasting beauty. Combining superior materials, state-of-the-art construction and unsurpassed craftsmanship, Premium Options provide enduring elegance. Designed to stand up to both Father Time and Mother Nature like no other door, we back our Premium 1/4-inch veneer and solid wood options with a limited 5-year warranty. Select a great door. Then, make it even better with your choice of our Premium Options.

Thicker Veneer Option

Many door companies build their doors with paper-thin veneer. At Tucker Door, we use nothing less than 1/16-inch, which provides excellent strength, look and feel. We believe anything less runs the risk of veneer bubbling, core bleedthrough or separation over time. With our Premium Thicker Veneer Option choose from a substantial 1/4-inch thick veneer or a solid door made from two pieces of laminated lumber. These sturdier options provide superior resistance to inevitable wear and tear.

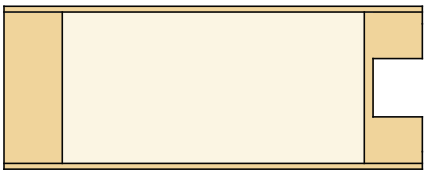

Our 1/16" Veneer

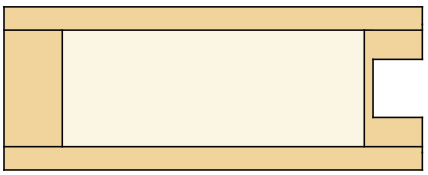

Rogue Premium 1/4" Veneer



Rogue Premium Solid Wood

Stain Grade Option

When you order the Premium Stain Grade Option, you can rest assured that you're getting the finest cut of veneer possible. The wood for these doors is hand-selected to be flawless and free of all imperfections. If knots are not a characteristic of the wood, we won't use it. If there are abnormal color variations or streaking in the grain, it won't make the cut. The doors you choose are uniquely yours by design. With our Stain Grade Option, you're ensured that the wood will be as aesthetically pleasing as the door you created.

Color Match Option

When you choose the Premium Color Match Option, we hand-sort the lumber and veneer to achieve an even and uniform color from one component to the next. This process will ensure that your beautiful new door will have the consistent color that you were looking for. Whether you prefer a lighter or darker shade of wood, we'll provide the perfect match.

Face Pin Inlays Option

Our stile and rail doors are built using classic cope and stick construction. This time-tested design combined with modern construction techniques provides unsurpassed strength and stability. Because we use a 5/8" x 5" fluted dowel to pin critical joints, it is no longer necessary to use mortise and tenon joints with face pins. But our customers have found that our Premium Face Pin Inlays Option provides an aesthetically pleasing authentic look.

Most Doors Also Available In Unique Sizes & Fire Rated

Many of our door designs are available in different sizes for grand entryways or small closets. Also, our designs come as exterior and interior fire doors with a 20, 45, 60 or 90-minute fire rating.

Glass Treatments

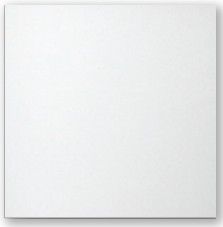

White Laminate

This safety glass is made by sandwiching a white film between clear panes.



Satin

Light and privacy combine in this translucent, semi-opaque glass treatment.



Clear

A clear pane of glass that provides classic, transparent simplicity.



Mist Lite*

A tight criss cross treatment on a clear glass pane that is mostly opaque.



Grey

A clear glass treatment with a subtle grey hue that is fully transparent.



Delta Frost

A fairly opaque, frosted glass treatment with a unique, random texture.



Rain

A vertical treatment resembling raindrops that is fairly opaque.



Seedy Baroque

Clear glass with a scattered look, baroque wash and asymmetrical curves.



Bronze

A clear, mostly-transparent glass with light bronze undertones.



Reeded*

An elegant vertical line treatment that is fairly transparent.



Bevel

A clear, tempered glass with a striking beveled edge.



Evergreen

A clear glass treatment with subtle green highlights that is mostly transparent.



Obscure-P516

A pebbled or “orange peel” treatment that is mostly opaque.



Glue Chip

A stylish frosted treatment that is fairly opaque.



Bamboo*

A unique pattern with vertical bamboo reeds and leaves. Fairly opaque.



Double Glue Chip

Glue chipped twice to obtain a denser, more concealing look than standard glue chip.



Monumental

A semi-transparent with a distinctive pattern offers privacy and natural light.



Solar Bronze

A mirrored exterior effect that provides a clear, bronze-tinted view from inside.

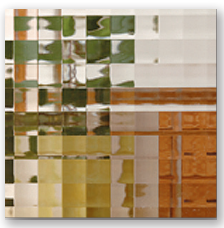

Cross Reed*

A semi-transparent, clear glass with a vertical and horizontal pattern.



Sycamore

Leaf impressions offer soft obscurity while allowing an abundance of light to travel throughout the room.

* These glass options are NOT recommended for Multi Light Doors.

316 Federal Street

STAFF REPORT: 316 Federal Street – PRELIMINARY Approval

DATE: 11/08/23

GENERAL INFORMATION		
Applicant:	**Ashley Randolph on behalf of Lynn King**	
Site Location/Address:	**316 Federal Street; R120 004 000 0840 0000**	
Applicant's Request:	**The applicant is requesting preliminary approval for alterations and additions to the existing structures at 316 Federal Street.**	
Current Zoning:	**T4-HN**	
ZONING DISTRICT INFORMATION		
	T4-HN	
Lot Width at Setback:	**40 ft.**	
Max Lot Coverage:	**55%**	
Min. Frontage Build Out	**75% of lot area**	
Front Setback	**Avg. setback on the block**	
Side Setback	**5 ft on corners/10 ft. interior in the Point**	
Rear Setback	**15 ft min**	
Building Height:	**3 stories max**	
SURROUNDING ZONING, LAND USE AND REQUIRED BUFFERS		
Adjacent Zoning	**Adjacent Land Uses**	**Setbacks for Adjacent Zoning /Buffer required if rezoned**
North: T-4 HN	**Historic Homes**	**N/A**
South: T-4 HN	**Historic Homes**	**N/A**
East: T-4 HN	**Historic Homes**	**N/A**
West: T-4 HN	**Historic Homes**	**N/A**

Background: The applicant is requesting preliminary approval to merge the existing buildings into one by adding a central infill space and renovating the interior at 316 Federal Street. The residence is a noncontributing structure constructed circa 1965 in the Point neighborhood. This project was first submitted at the October 4, 2023 HRTC meeting. Staff supports the proposed alterations.

FINDINGS AND RECOMMENDATIONS

Staff Recommendation:

Staff recommends denial of the proposed alterations and additions at 316 Federal Street, based on the following:

1. **Applicant to confirm the project does not exceed maximum lot coverage of 55% of lot area. Per footnote 1 of table 2.4.1.A, the applicant can have an additional 10% used for total impervious coverage.**
2. **Overall, staff is supportive of this project and the proposed changes to convert these separate structures into a single-family residence. To mimic comments provided to the applicant at the HTRC meeting, staff still has concerns that the center infill appears institutional rather than residential. Staff has the following recommendations to help mitigate this concern:**
3. **The center "unification" form appears out of proportion to the existing "arms" of the building. Staff recommends the center infill be more transparent and minimal in its articulation and the existing structures should be easily discerned at completion.**
4. **Staff recommends the applicant restudy the proposed pediment as it seems to be contributing to the "institutional" feel of the front elevation.**
5. **Staff supports the front entry "courtyard" with trees, and requests additional detail of the wall/fence proposed around the area.**
6. **Applicant to submit drawings of the proposed outdoor kitchen to the rear of the carriage house.**
7. **Applicant to provide details of the proposed cocktail pool.**
8. **Applicant to provide a landscape plan at next submittal.**

DEVELOPMENT REVIEW PROCESS

HISTORIC REVIEW BOARD APPLICATION

Community & Economic Development Department
1911 Boundary Street, Beaufort, South Carolina, 29902
p. (843) 525-7011 / f. (843) 986-5606
www.cityofbeaufort.org

☐ Staff Review
☐ Board Review

Application Fee:
see attached schedule

OFFICE USE ONLY: **Date Filed:** _____ **Application #:** _____ **Zoning District:** _____
BCAGHS Survey: ☐ **Yes** ☐ **No**

Schedule: The Historic Review Board (HRB) typically meets the 2nd Wednesday of each month at 2pm. The complete schedule, along with the list of deadlines, may be found here - http://www.cityofbeaufort.org/historic-review-board.aspx

Submittal Requirements: All forms and information shall be submitted digitally. In addition to a complete application form, applicants shall submit the required items according to the checklists on the subsequent page.

Review Request: ☐ Conceptual ■ Preliminary ☐ Final ☐ Bailey Bill Approval* ☐ Change After Certification
**Requires a Bailey Bill – Part A Preliminary Review Application Form*

Pursuant to Section 6-29-1145 of the South Carolina Code of Laws, is this tract or parcel restricted by any recorded covenant that is contrary to, conflicts with, or prohibits the activity described in this application? ☐ **Yes** ☑ **No**

Applicant, Property, and Project Information

Applicant Name: Ashley Randolph

Applicant Address: 1003 Charles Street, Beaufort, SC

Applicant E-mail: ashleyr@allisonramseyarchitect.con Applicant Phone Number: _____

Applicant Title: ☐ Homeowner ☐ Tenant ■ Designer ☐ Engineer ☐ Developer

Owner (if other than the Applicant): Lynn King

Owner Address: 316 Federal Street, Beaufort, SC

Project Name: 316 Federal Street Renovation

Property Address: 316 Federal Street, Beaufort, SC

Property Identification Number *(Tax Map & Parcel Number):* R120 004 000 0840 0000

Date Submitted: 10-20-2023

Certification of Correctness: I/we certify that the information in this application is correct.

Applicant's Signature: Ashley Randolph Date: 10-20-2023

Owner's Signature: _____ Date: _____

(The owner's signature is required if the applicant is not the owner.)

DEVELOPMENT REVIEW PROCESS

HISTORIC REVIEW BOARD APPLICATION

Community & Economic Development Department
1911 Boundary Street, Beaufort, South Carolina, 29902
p. (843) 525-7011 / f. (843) 986-5606
www.cityofbeaufort.org

Project Name: 316 Federal Street Renovation

Property Size in Acres: 0.61 Acres Proposed Building Use: Single-Family Residence

Nature of Work (check all that apply):

☐ New Construction, Primary Structure ☐ New Construction, Primary Structure ■ Alterations / Additions

☐ Demolition* ☐ Relocation* **Demolition and Relocation requires a public hearing*

Building Square Footage (if multiple buildings, please list each one and their square footage by floor):
Existing Heated SF = 2396 SF; Proposed Heated SF = 3046 SF (+650 SF)

Is this project a redevelopment project: ☐ Y ☑ N

Are there existing buildings on the site? ☑ Y ☐ N if yes, will they remain? ☑ Y ☐ N

Provide a brief Project Narrative (if requesting Bailey Bill Approval, this section may be left blank):

Addition of vaulted space between existing buildings and renovations to interior to turn merge three existing units into one single family residence

CONTACT INFORMATION –

Attention: Julie A. Bachety, Administrative Assistant II
City of Beaufort Department of Planning & Development Services
1911 Boundary Street, Beaufort, South Carolina 29902
E-Mail: jbachety@cityofbeaufort.org: | Phone: (843) 525-7011 | Fax: (843) 986-5606

SYMBOLS + KEYS

DOOR AND WINDOW SIZE KEY

2868O = 2'-8" WIDE x 6'-0" HIGH

DRAWING NUMBER — 1/3 = SECTION OR ELEVATION — SHEET NUMBER

ROOM TITLE

KITCHEN

10" CLG. — CEILING HEIGHT

WOOD — FLOOR FINISH

1 DRAWING TITLE

1 — DETAIL OR ELEVATION NUMBER

14.00' = ELEVATION ABOVE SEA LEVEL

1 = REVISION NUMBER

= REVISION CLOUD

REF. 88 = PLAN REFERENCE NORTH

S	SINGLE POLE SWITCH
S3	THREE WAY SWITCH
S4	FOUR WAY SWITCH
SD	DIMMER SWITCH
SDC	SPEED CONTROL
	DUPLEX OUTLET
	1/2 HOT OUTLET
WP	WATER PROOF OUTLET
GF	GROUND FAULT OUTLET
	QUADRUPLEX OUTLET
	SPECIALTY OUTLET
	FLOOR OUTLET
	TELEPHONE JACK
T	THERMOSTAT
TV	TELEVISION JACK
V	VENT
V/L	VENT w/ LIGHT
	SURFACE MOUNTED FIXTURE
	RECESSED FIXTURE
	WALL MOUNTED FIXTURE
	FLOOD LIGHT
	LED FIXTURE
	CEILING FAN
	STRIP LIGHTING
J	CEILING BOX
B	DOOR CHIME
	ELECTRICAL PANEL
S	SMOKE DETECTOR
CO	CARBON MONOXIDE DETECTOR

CONCEPTUAL RENDERING

DRAWING INDEX

0	COVER SHEET
5	EXISTING SITE PLAN
52	PROPOSED SITE PLAN
53	CONTEXT PHOTOS
1	EXISTING FLOOR PLAN
2	PROPOSED FLOOR PLAN
3	EXISTING ELEVATIONS
4	EXISTING ELEVATIONS
5	PROPOSED ELEVATIONS
6	PROPOSED ELEVATIONS + BUILDING SECTION
7	COLOR RENDERING

GENERAL INFO.

AREA CALCULATIONS

EXISTING HEATED = 2396 S.F.

PROPOSED HEATED = 3046 S.F.

316 FEDERAL STREET RENOVATION

316 FEDERAL STREET BEAUFORT, SC

316 FEDERAL ST. RENOVATION

316 FEDERAL ST. BEAUFORT, SC

ALLISON RAMSEY Architects, inc. creating sustainable timeless design

1003 Charles St.
Beaufort SC, 29902
(843) 986-0559
www.allisonramseyarchitect.com

THIS PLAN HAS BEEN PREPARED TO MEET CITY PROFESSIONAL STANDARDS AND PRACTICES. HOWEVER, BUILDING CODES AND ENVIRONMENTAL CONDITIONS VARY FOR DIFFERENT LOCATIONS. IT IS THE RESPONSIBILITY OF THE CONTRACTOR OF THIS PLAN TO ENFORCE THE FOLLOWING BEFORE CONSTRUCTION BEGINS. ALLISON RAMSEY ARCHITECTS, INC ASSUMES NO LIABILITY FOR ANY HOME CONSTRUCTED FROM THIS PLAN.

-VERIFY ALL DIMENSIONS PRIOR TO PROCEEDING WITH CONSTRUCTION
-VERIFY COMPLIANCE WITH ALL LOCAL CODES
-FLOOD, ROOF LOCATIONS, CIVIL ENGINEERING ASPECTS SHOULD RECOMMENDED
-ALL SET BACKS, EASEMENTS, ZONING
-HVAC & PLUMBING LOCATIONS ARE NOT INCLUDED. THESE SHOULD BE OBTAINED FROM A LOCAL MECH. CONTRACTOR OR ENGINEER TO ENSURE COMPLIANCE WITH LOCAL CODE AND THEY EQUIPMENT IN SIZE CORRECTLY FOR YOUR SPECIFIC REGION AND CONDITIONS.
-VERIFY ALL SPECIFICATIONS WITH LOCAL SUPPLIERS AND CONTRACTORS

DATE:	10/31/2023
JOB NO.	2313
DWN. BY:	AR
DWG. NAME:	2313.DWG

0

Copyright 2023 by Allison Ramsey Architects, Inc. All rights reserved.



315 FEDERAL STREET



310 FEDERAL STREET



310 FEDERAL STREET



500 PINCKNEY STREET



309 FEDERAL STREET



303 FEDERAL STREET



302 FEDERAL STREET



309 FEDERAL STREET

316 FEDERAL ST. RENOVATION

316 FEDERAL ST. BEAUFORT, SC

ALLISON RAMSEY Architects Inc. creating sustainable timeless design
1003 Charles St.
Beaufort SC, 29902
(843) 986-0559
www.allisonramseyarchitect.com

THIS PLAN HAS BEEN PREPARED TO MEET TOP PROFESSIONAL STANDARDS AND PRACTICES. HOWEVER, BUILDING CODES AND ENVIRONMENTAL CONDITIONS VARY FOR DIFFERENT LOCATIONS. IT IS THE RESPONSIBILITY OF THE PURCHASER OF THIS PLAN TO PROVIDE THE FOLLOWING BEFORE BEGINNING CONSTRUCTION. ALLISON RAMSEY ARCHITECTS, INC. ASSUMES NO LIABILITY FOR ANY WORK CONSTRUCTED FROM THIS PLAN.

- VERIFY ALL DIMENSIONS PRIOR TO PROCEEDING WITH CONSTRUCTION
- VERIFY COMPLIANCE WITH ALL LOCAL CODES
- PLANS INDICATE LOCATIONS ONLY, ENGINEERING ASPECTS SHOULD INCORPORATE ACTUAL SITE CONDITIONS.
- MAG + PLUMBING LOCATIONS ARE NOT INCLUDED. THESE SHOULD BE OBTAINED FROM A LOCAL MECH. CONTRACTOR OR ENGINEER TO ENSURE COMPLIANCE WITH LOCAL CODE AND THAT EQUIPMENT IS SIZED CORRECTLY FOR YOUR PARTICULAR REGION AND CONDITIONS.
- VERIFY ALL STRUCTURAL ELEMENTS WITH LOCAL ENGINEER AND/OR ARCHITECT.

DATE:	10/31/2023
JOB NO.	23113
DWN. BY:	AR
DWG. NAME:	23113.DWG

Copyright 2023 by Allison Ramsey Architects, Inc. All rights reserved.

S3

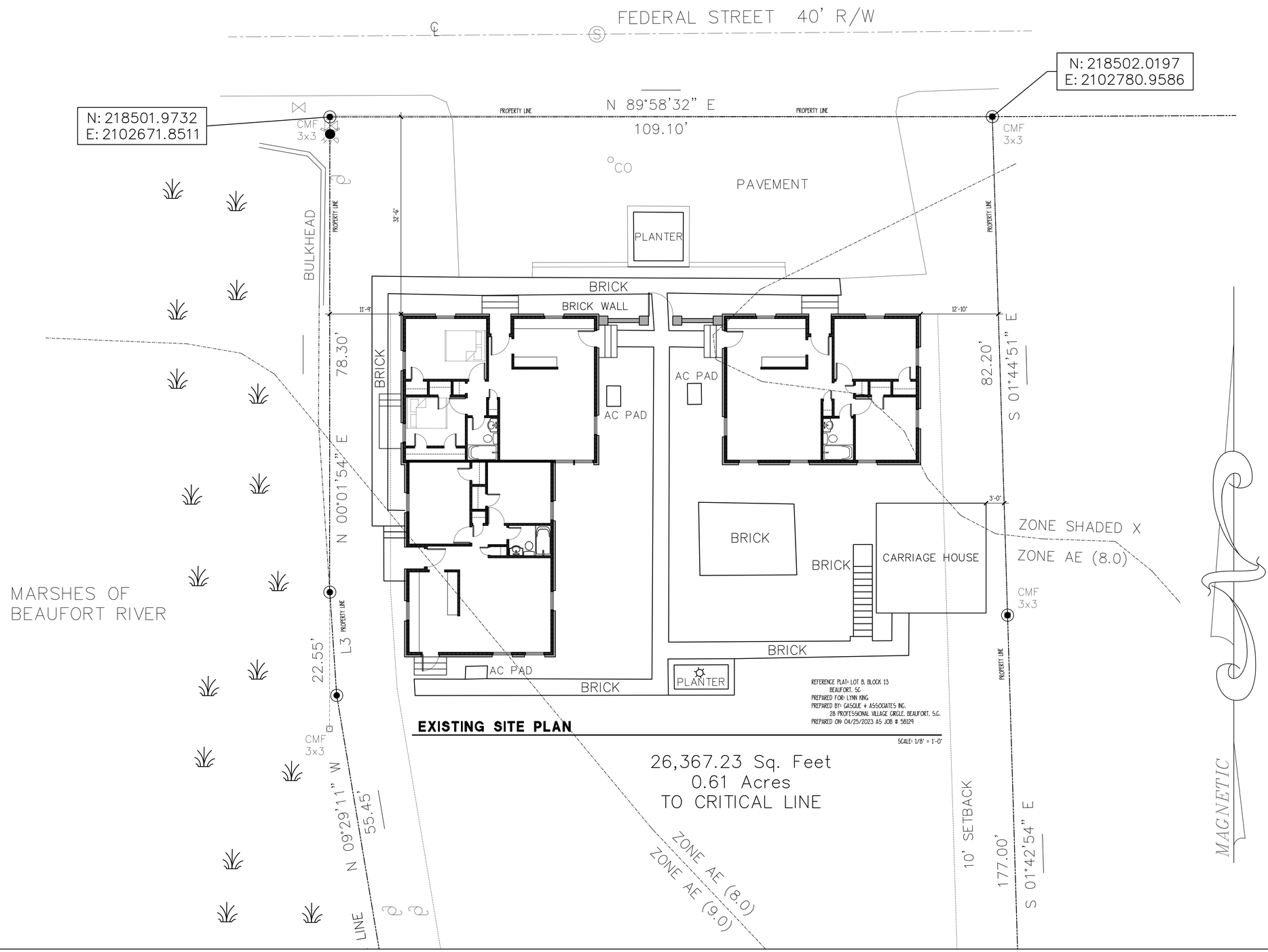

316 FEDERAL ST. RENOVATION

316 FEDERAL ST. BEAUFORT, SC

ALLISON RAMSEY Architects, inc. creating sustainable timeless design
1003 Charles St.
Beaufort SC, 29902
(843) 986-0559
www.allisonramseyarchitect.com

THIS PLAN HAS BEEN PREPARED TO MEET TRIP PROTECTION STANDARDS AND PRACTICES. HOWEVER, BUILDING, COSTS, AND ENVIRONMENTAL CONDITIONS VARY FOR DIFFERENT LOCATIONS. IT IS THE RESPONSIBILITY OF THE TRADESMEN OF THIS PLAN TO STRETCHIT NOT COLUMNS, BEFORE BEING CONSTRUCTED FROM THIS PLAN. ALLISON RAMSEY ARCHITECTS, INC ASSUMES NO LIABILITY FOR ANY HOME CONSTRUCTED FROM THIS PLAN.

- VERIFY ALL DIMENSIONS PRIOR TO FABRICATING AND CONSTRUCTION
- VERIFY COMPLIANCE WITH ALL LOCAL CODES
- PLANS PACKET LOCATIONS ONLY, ENGINEERING ASPECTS SHOULD INCORPORATE
- ELEC. & PLUMBING LAYOUTS ARE NOT INCLUDED. THESE SHOULD BE OBTAINED FROM A LOCAL MECH. CONTRACTOR OR ENGINEER TO ENSURE COMPLIANCE WITH LOCAL CODE
- ANY TRUSS DIAGRAMS IN SHEET SUBMITTED FOR TRUSS FABRICATION ARE FOR REFERENCE ONLY. ACTUAL TRUSS DESIGN AND LOCATIONS TO BE DETAILED BY TRUSS MANUFACTURER

DATE:	10/20/2023
JOB NO.	23113
DWN. BY:	AR
DWG. NAME:	23113.DWG

S

Copyright 2023 by Allison Ramsey Architects, Inc. All rights reserved.

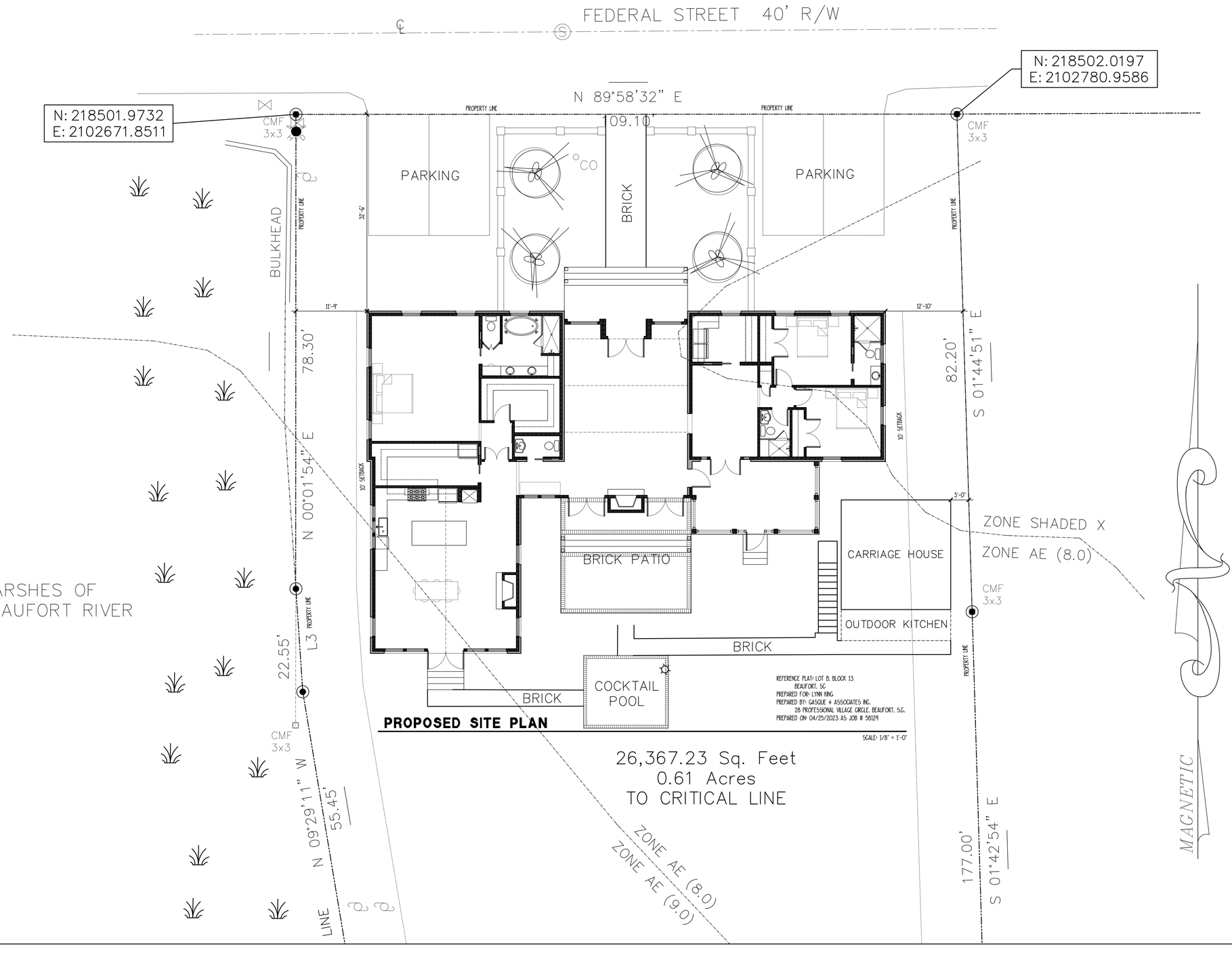

PROPOSED SITE PLAN

26,367.23 Sq. Feet
0.61 Acres
TO CRITICAL LINE

316 FEDERAL ST. RENOVATION

316 FEDERAL ST. BEAUFORT, SC

ALLISON RAMSEY Architects Inc. creating sustainable timeless design
1003 Charles St.
Beaufort SC, 29902
(843) 986-0559
www.allisonramseyarchitect.com

THIS PLAN WAS NEITHER PREPARED TO MEET TOP PROFESSIONAL STANDARDS AND PRACTICES, ENGINEER, BUILDING CODES AND ENVIRONMENTAL CONDITIONS THAT FOR DIFFERENT LOCATIONS, IT IS THE RESPONSIBILITY OF THE PURCHASER OF THIS PLAN TO PREPARE THE FOLLOWING BEFORE BEGINNING CONSTRUCTION, ALLISON RAMSEY ARCHITECTS, INC. ASSUMES NO LIABILITY FOR ANY WORK CONSTRUCTED FROM THIS PLAN.

- VERIFY ALL DIMENSIONS PRIOR TO PROCEEDING WITH CONSTRUCTION
- VERIFY COMPLIANCE WITH ALL LOCAL CODES
- PLANS INDICATE LOCATIONS ONLY, ENGINEERING ASPECTS SHOULD INCORPORATE ACTUAL SITE CONDITIONS.
- ENG + PLANNING LAYOUTS ARE NOT INCLUDED, THESE SHOULD BE OBTAINED FROM A LOCAL PEOPLE CONTRACTOR OR ENGINEER TO ENSURE COMPLIANCE WITH LOCAL CODE AND THAT EQUIPMENT IS SIZED CORRECTLY FOR YOUR PARTICULAR REGION AND CONDITIONS.
- VERIFY ALL STRUCTURAL ELEMENTS WITH LOCAL ENGINEER AND/OR ARCHITECT.

DATE:	10/20/2023
JOB NO.	23113
DWN. BY:	AR
DWG. NAME:	23113.DWG

Copyright 2023 by Allison Ramsey Architects, Inc. All rights reserved.

S2

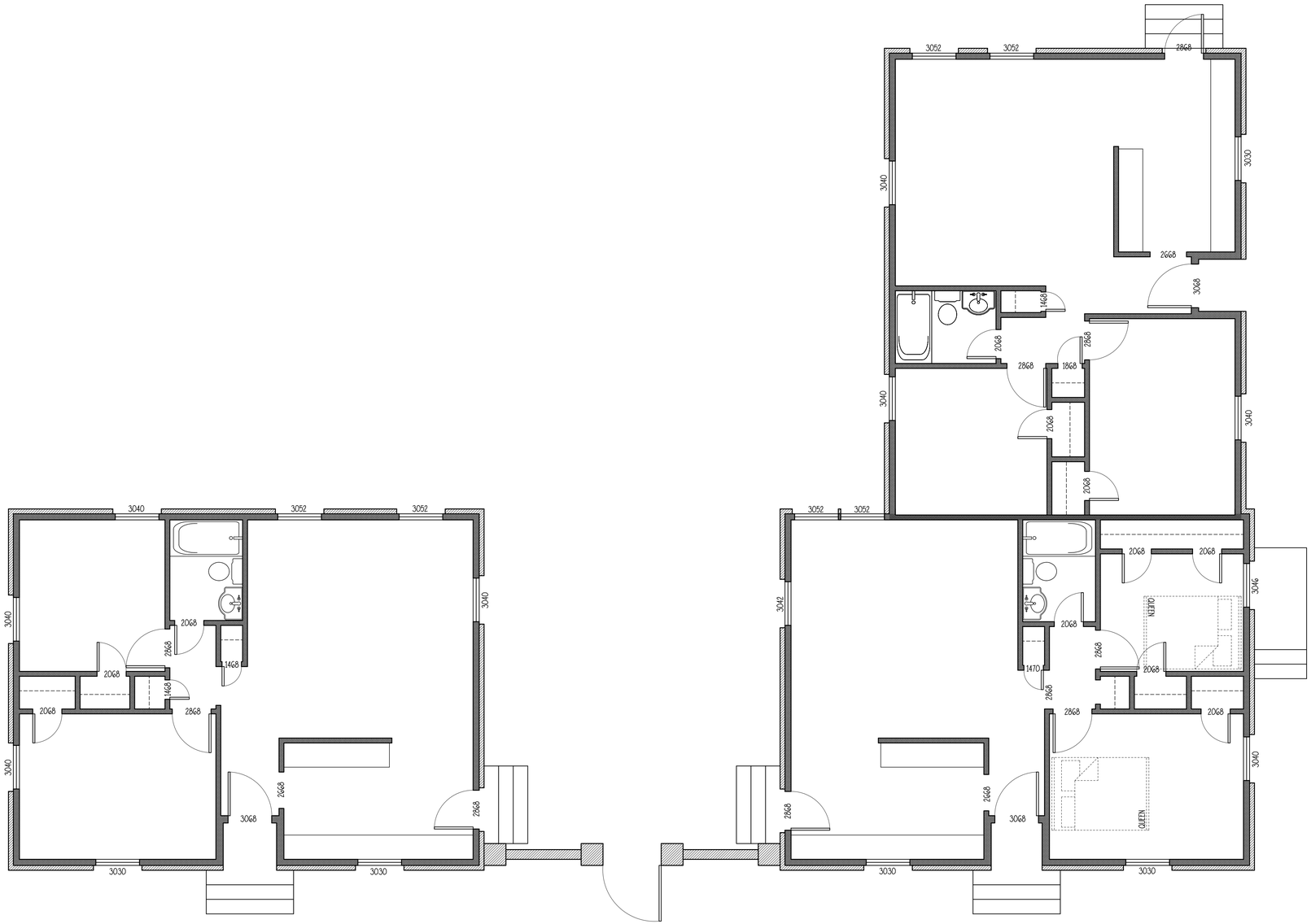

EXISTING FLOOR PLAN

SCALE: 1/4" = 1'-0"

316 FEDERAL ST. RENOVATION

316 FEDERAL ST. BEAUFORT, SC

ALLISON RAMSEY Architects Inc. creating sustainable timeless design
1003 Charles St.
Beaufort SC, 29902
(843) 986-0559
www.allisonramseyarchitect.com

THIS PLAN HAS BEEN PREPARED TO MEET TOP PROFESSIONAL STANDARDS AND PRACTICES. HOWEVER, BUILDING CODES AND ENVIRONMENTAL CONDITIONS VARY FOR DIFFERENT LOCATIONS. IT IS THE RESPONSIBILITY OF THE PURCHASER OF THIS PLAN TO PERFORM THE FOLLOWING BEFORE BEGINNING CONSTRUCTION. ALLISON RAMSEY ARCHITECTS, INC. ASSUMES NO LIABILITY FOR ANY WORK CONSTRUCTED FROM THIS PLAN.

- VERIFY ALL DIMENSIONS PRIOR TO PROCEEDING WITH CONSTRUCTION
- VERIFY COMPLIANCE WITH ALL LOCAL CODES
- PLANS INDICATE LOCATIONS ONLY, ENGINEERING ASPECTS SHOULD INCORPORATE ACTUAL SITE CONDITIONS.
- PRICE & PLUMBING LAYOUTS ARE NOT INCLUDED. THESE SHOULD BE OBTAINED FROM A LOCAL MEDIA CONTRACTOR OR ENGINEER TO ENSURE COMPLIANCE WITH LOCAL CODE AND THAT EQUIPMENT IS SIZED CORRECTLY FOR YOUR PARTICULAR REGION AND CONDITIONS.
- VERIFY ALL STRUCTURAL ELEMENTS WITH LOCAL ENGINEER AND/OR ARCHITECT.

Copyright 2023 by Allison Ramsey Architects, Inc. All rights reserved.

DATE:	10/20/2023
JOB NO.	23113
DWN. BY:	AR
DWG. NAME:	23113.DWG

1

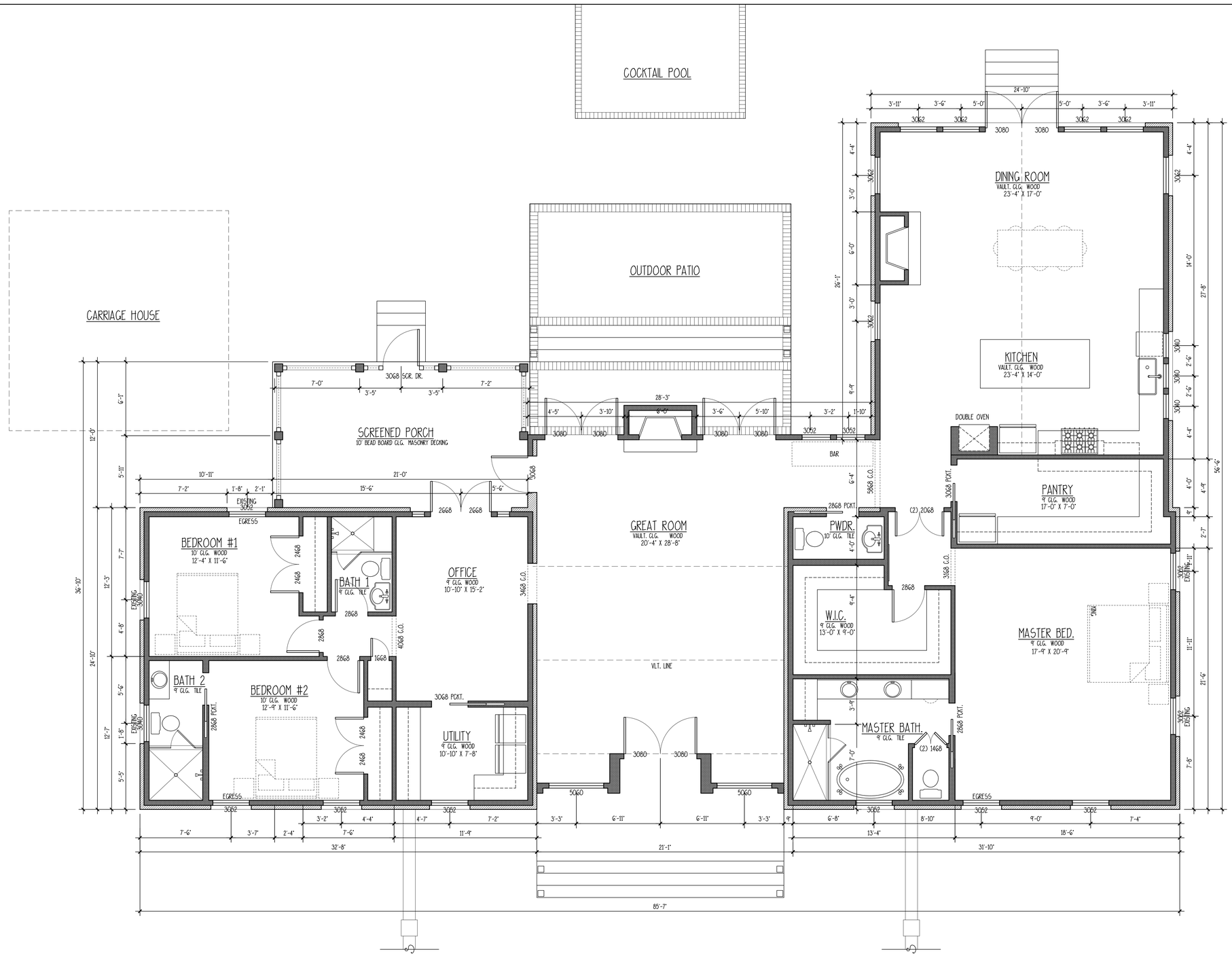

PROPOSED FLOOR PLAN

TOTAL HEATED S.F. - 3046 S.F. (2719 S.F. WOOD FLR. S.B.O.)

SCALE: 1/4" = 1'-0"

316 FEDERAL ST. RENOVATION

316 FEDERAL ST. BEAUFORT, SC

ALLISON RAMSEY Architects Inc. creating sustainable timeless design
1003 Charles St.
Beaufort SC, 29902
(843) 986-0559
www.allisonramseyarchitect.com

THIS PLAN HAS BEEN PREPARED TO MEET TOP PROFESSIONAL STANDARDS AND PRACTICES. HOWEVER, BUILDING CODES AND ENVIRONMENTAL CONDITIONS VARY FOR DIFFERENT LOCATIONS. IT IS THE RESPONSIBILITY OF THE PURCHASER OF THIS PLAN TO PERFORM THE FOLLOWING BEFORE BEGINNING CONSTRUCTION. ALLISON RAMSEY ARCHITECTS, INC. ASSUMES NO LIABILITY FOR ANY WORK CONSTRUCTED FROM THIS PLAN.

- VERIFY ALL DIMENSIONS PRIOR TO PROCEEDING WITH CONSTRUCTION
- VERIFY COMPLIANCE WITH ALL LOCAL CODES
- PLANS INDICATE LOCATIONS ONLY, ENGINEERING ASPECTS SHOULD INCORPORATE ACTUAL SITE CONDITIONS.
- ELECTRICAL & PLUMBING LAYOUTS ARE NOT INCLUDED. THESE SHOULD BE OBTAINED FROM A LOCAL MECH. CONTRACTOR OR ENGINEER TO ENSURE COMPLIANCE WITH LOCAL CODE AND THAT EQUIPMENT IS SIZED CORRECTLY FOR YOUR PARTICULAR REGION AND CONDITIONS.
- VERIFY ALL STRUCTURAL ELEMENTS WITH LOCAL ENGINEER AND/OR ARCHITECT.

DATE:	10/20/2023
JOB NO.	23113
DWN. BY:	AR
DWG. NAME:	23113.DWG

Copyright 2023 by Allison Ramsey Architects, Inc. All rights reserved.

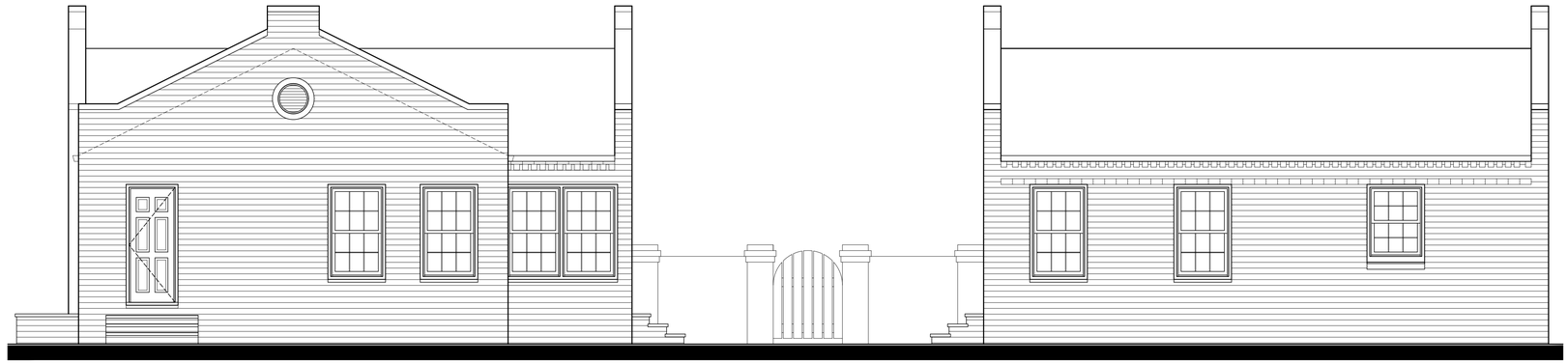

2 REAR OVERALL EXISTING ELEVATION

SCALE: 1/4" = 1'-0"

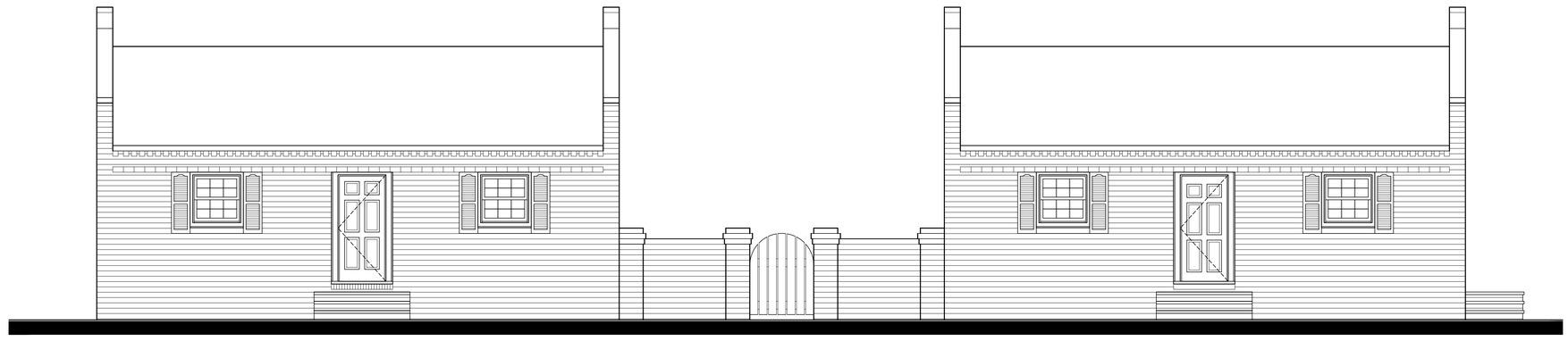

1 FRONT OVERALL EXISTING ELEVATION

SCALE: 1/4" = 1'-0"

316 FEDERAL ST. RENOVATION

316 FEDERAL ST. BEAUFORT, SC

ALLISON RAMSEY Architects, inc. creating sustainable timeless design
1003 Charles St
Beaufort SC, 29902
(843) 986-0559
www.allisonramseyarchitect.com

THIS PLAN HAS BEEN PREPARED TO MEET TOP PROFESSIONAL STANDARDS AND PRACTICES. HOWEVER, BUILDING CODES AND ENVIRONMENTAL CONDITIONS VARY FOR DIFFERENT LOCATIONS. IT IS THE RESPONSIBILITY OF THE PURCHASER OF THIS PLAN TO PERFORM THE FOLLOWING BEFORE CONSTRUCTION: SOIL ANALYSIS, SURVEY, ENGINEERING, AND ARCHITECTURAL MODIFICATIONS AS NEEDED TO CONSTRUCT FOR ANY STATE, CONSTRUCTED FROM THIS PLAN.

- VERIFY COMPLIANCE WITH ALL LOCAL CODES
- VERIFY ALL DIMENSIONS PRIOR TO PROCEEDING WITH CONSTRUCTION
- PLANS INDICATE LOCATIONS ONLY; ENGINEERING ASPECTS SHOULD BE INCORPORATE
- HVAC & PLUMBING LAYOUTS ARE NOT INCLUDED. THESE SHOULD BE OBTAINED FROM A LOCAL MECH. CONTRACTOR OR ENGINEER TO ENSURE COMPLIANCE WITH LOCAL CODE AND THAT EQUIPMENT IS SELECTED/SIZED FOR YOUR PARTICULAR DESIGN AND CONDITIONS.
- NOTIFY ALL REGIONAL & UTILITY AUTHORITIES BEFORE EXCAVATION AND DIGGING

DATE:	10/20/2023
JOB NO.	23113
DWN. BY:	AR
DWG. NAME:	23113.DWG

Copyright 2023 by Allison Ramsey Architects, Inc. All rights reserved.



4 LEFT OVERALL EXISTING ELEVATION

SCALE: 1/4" = 1'-0"



3 BUILDING A LEFT EXISTING ELEVATION

SCALE: 1/4" = 1'-0"



2 BUILDING A RIGHT EXISTING ELEVATION

SCALE: 1/4" = 1'-0"



1 RIGHT OVERALL EXISTING ELEVATION

SCALE: 1/4" = 1'-0"

316 FEDERAL ST. RENOVATION

316 FEDERAL ST. BEAUFORT, SC

ALLISON RAMSEY Architects, inc. creating sustainable timeless design
1003 Charles St
Beaufort SC, 29902
(843) 986-0559
www.allisonramseyarchitect.com

THIS PLAN HAS BEEN PREPARED TO MEET TOP PROFESSIONAL STANDARDS AND PRACTICES. INCREMENTAL BUILDING CODES AND ENVIRONMENTAL CONDITIONS VARY FOR DIFFERENT LOCATIONS. IT IS THE RESPONSIBILITY OF THE PURCHASER OF THIS PLAN TO PERFORM THE FOLLOWING BEFORE CONSTRUCTION: VERIFY ALL CONDITIONS, DIMENSIONS, AND ELEVATIONS. ALLISON RAMSEY ARCHITECTS, INC. ASSUMES NO LIABILITY FOR ANY ITEMS CONSTRUCTED FROM THIS PLAN.

- VERIFY COMPLIANCE WITH ALL LOCAL CODES
- VERIFY ALL DIMENSIONS PRIOR TO PROCEEDING WITH CONSTRUCTION
- PLANS INDICATE LOCATIONS ONLY; ENGINEERING ASPECTS SHOULD BE INCORPORATED BY A QUALIFIED ENGINEER.
- HVAC & PLUMBING LAYOUTS ARE NOT INCLUDED. THESE SHOULD BE OBTAINED FROM A LOCAL MECH. CONTRACTOR OR ENGINEER TO ENSURE COMPLIANCE WITH LOCAL CODE AND THAT EQUIPMENT IS SELECTED/SIZED FOR YOUR PARTICULAR DESIGN AND CONDITIONS.
- NOTIFY ALL ADJACENT PROPERTY OWNERS BEFORE DEMOLITION AND/OR CONSTRUCTION.

DATE:	10/20/2023
JOB NO.	23113
DWN. BY:	AR
DWG. NAME:	23113.DWG

Copyright 2023 by Allison Ramsey Architects, Inc. All rights reserved.



2 PROPOSED RIGHT ELEVATION

SCALE: 1/4" = 1'-0"



1 PROPOSED FRONT ELEVATION

SCALE: 1/4" = 1'-0"

316 FEDERAL ST. RENOVATION

316 FEDERAL ST. BEAUFORT, SC

ALLISON RAMSEY
Architects inc. creating sustainable timeless design
1003 Charles St.
Beaufort SC, 29902
(843) 986-0559
www.allisonramseyarchitect.com

THIS PLAN HAS BEEN PREPARED TO MEET CDP PROFESSIONAL STANDARDS AND PRACTICES. HOWEVER, BUILDING CODES AND ENVIRONMENTAL CONDITIONS VARY FOR DIFFERENT LOCATIONS. IT IS THE RESPONSIBILITY OF THE PURCHASER OF THIS PLAN TO VERIFY THE FOLLOWING BEFORE BEGINNING CONSTRUCTION. ALLISON RAMSEY ARCHITECTS, INC. ASSUMES NO LIABILITY FOR ANY WORK CONSTRUCTED FROM THIS PLAN.

-VERIFY ALL DIMENSIONS PRIOR TO PROCEEDING WITH CONSTRUCTION
-VERIFY COMPLIANCE WITH ALL LOCAL CODES
-PLAN INDICATE LOCATIONS ONLY. ENGINEERING ASPECTS SHOULD INCORPORATE ACTUAL SITE CONDITIONS
-VERIFY COMPLIANCE WITH ALL LOCAL CODES
-PLUMBING LAYOUTS ARE NOT INCLUDED. THESE SHOULD BE OBTAINED FROM A LOCAL PROFESSIONAL CONTRACTOR OR ENGINEER TO ENSURE COMPLIANCE WITH LOCAL CODE AND THAT EQUIPMENT IS SIZED CORRECTLY FOR THE PARTICULAR DESIGN AND CONDITIONS.
-VERIFY ALL STRUCTURAL LETTERS WITH LOCAL ENGINEER AND ARCHITECT

DATE:	10/20/2023
JOB NO.	23113
DWN. BY:	AR
DWG. NAME:	23113.DWG

Copyright 2023 by Allison Ramsey Architects, Inc. All rights reserved.

5



2 **PROPOSED LEFT ELEVATION**

SCALE: 1/4" = 1'-0"



3 **PROPOSED SECTION**

SCALE: 1/4" = 1'-0"



1 **PROPOSED REAR ELEVATION**

SCALE: 1/4" = 1'-0"

316 FEDERAL ST. RENOVATION

316 FEDERAL ST. BEAUFORT, SC

ALLISON RAMSEY
Architects Inc. creating sustainable timeless design
1003 Charles St.
Beaufort SC, 29902
(843) 986-0559
www.allisonramseyarchitect.com

THIS PLAN HAS BEEN PREPARED TO MEET TOP PROFESSIONAL STANDARDS AND PRACTICES. HOWEVER, BUILDING CODES AND ENVIRONMENTAL CONDITIONS VARY FOR DIFFERENT LOCATIONS. IT IS THE RESPONSIBILITY OF THE PURCHASER OF THIS PLAN TO PREPARE THE FOLLOWING BEFORE BEGINNING CONSTRUCTION. ALLISON RAMSEY ARCHITECTS, INC. ASSUMES NO LIABILITY FOR ANY WORK CONSTRUCTED FROM THIS PLAN.

- VERIFY ALL DIMENSIONS PRIOR TO PROCEEDING WITH CONSTRUCTION
- VERIFY COMPLIANCE WITH ALL LOCAL CODES
- PLANS INDICATE LOCATIONS ONLY, ENGINEERING ASPECTS SHOULD INCORPORATE ACTUAL SITE CONDITIONS.
- MAG + PLUMBING LAYOUTS ARE NOT INCLUDED. THESE SHOULD BE OBTAINED FROM A LOCAL MECH. CONTRACTOR OR ENGINEER TO ENSURE COMPLIANCE WITH LOCAL CODE AND THAT EQUIPMENT IS SIZED CORRECTLY FOR YOUR PARTICULAR REGION AND CONDITIONS.
- VERIFY ALL STRUCTURAL ELEMENTS WITH LOCAL ENGINEER AND/OR ARCHITECT.

Copyright 2023 by Allison Ramsey Architects, Inc. All rights reserved.

DATE:	10/20/2023
JOB NO.	23113
DWN. BY:	AR
DWG. NAME:	23113.DWG

6

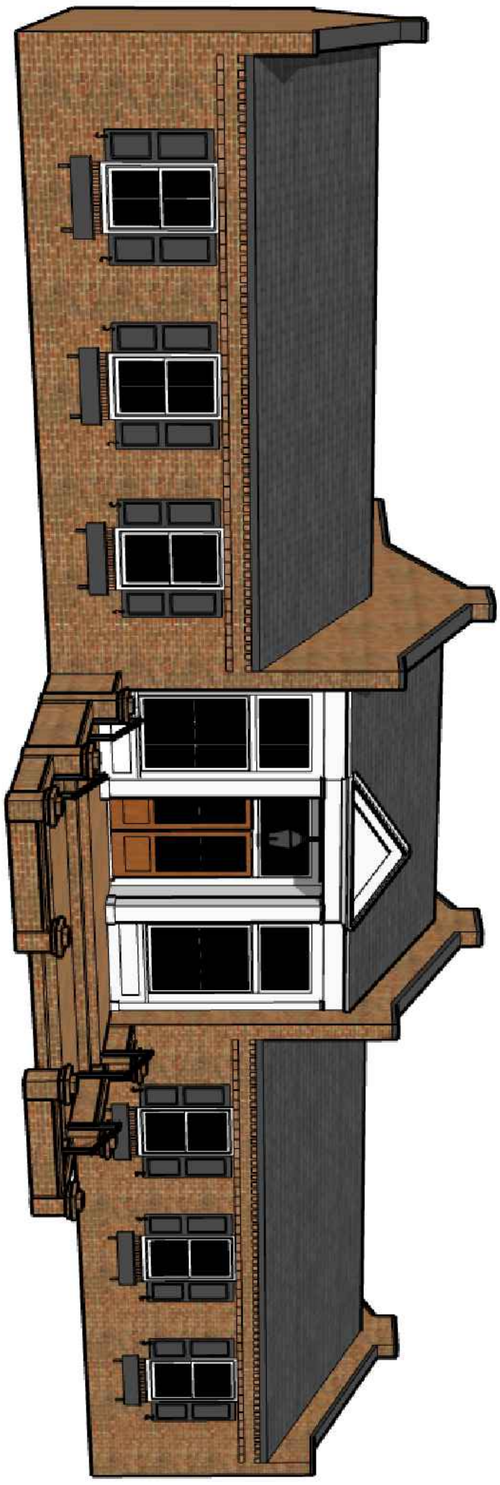

Copyright 2023 by Allison Ramsey Architects, Inc. All rights reserved.

7

DATE:	10/31/2023
JOB NO.	23113
DWN. BY:	AR
DWG. NAME:	23113.DWG

THIS PLAN HAS BEEN PREPARED TO MEET TOP PROFESSIONAL STANDARDS AND PRACTICES. HOWEVER, BUILDING CODES AND ENVIRONMENTAL CONDITIONS VARY FOR DIFFERENT LOCATIONS. IT IS THE RESPONSIBILITY OF THE PURCHASER OF THIS PLAN TO PERFORM THE FOLLOWING BEFORE BEGINNING CONSTRUCTION. ALLISON RAMSEY ARCHITECTS, INC. ASSUMES NO LIABILITY FOR ANY HOME CONSTRUCTED FROM THIS PLAN.

- VERIFY ALL DIMENSIONS PRIOR TO PROCEEDING WITH CONSTRUCTION
- VERIFY COMPLIANCE WITH ALL LOCAL CODES
- PLANS INDICATE LOCATIONS ONLY; ENGINEERING ASPECTS SHOULD INCORPORATE ACTUAL SITE CONDITIONS.
- HVAC + PLUMBING LAYOUTS ARE NOT INCLUDED. THESE SHOULD BE OBTAINED FROM A LOCAL MECH. CONTRACTOR OR ENGINEER TO ENSURE COMPLIANCE WITH LOCAL CODE AND THAT EQUIPMENT IS SIZED CORRECTLY FOR YOUR PARTICULAR REGION AND CONDITIONS.
- VERIFY ALL STRUCTURAL ELEMENTS WITH LOCAL ENGINEER AND/OR ARCHITECT.

ALLISON | RAMSEY
Architects, Inc. creating sustainable timeless design
1003 Charles St.
Beaufort SC, 29902
(843) 986-0559
www.allisonramseyarchitect.com

316 FEDERAL ST. RENOVATION

316 FEDERAL ST. BEAUFORT, SC

Block Redevelopment

STAFF REPORT: Wheeler/Old Jail Site – FINAL Approval

DATE: 11/08/23

GENERAL INFORMATION	
Applicant:	**Allison Ramsey Architects, agent for Jeff Wheeler**
Site Location/Address:	**Corner of Monson/Wilmington/Harrington; Prince and King Street R 120 004 000 1009 0000; R 120 004 000 0598 0000**
Applicant's Request:	**The applicant is requesting final approval of two blocks of redevelopment in the Historic District.**
Current Zoning:	**T4-N**

ZONING DISTRICT INFORMATION	
	T4-N
Lot Width at Setback:	**N/A**
Max Lot Coverage:	**100%**
Min. Frontage Build Out	**60% min/85% max**
Front Setback	**0' min/15' max**
Side Setback	**Side Interior – 5' min, or 0' if attached. Side Corner/Alley – 0'min. – 10' max**
Rear Setback	**10'**
Building Height:	**4 stories max; 3.5 stories max in & fronting Historic District & interior lots along Allison Rd.**

SURROUNDING ZONING, LAND USE AND REQUIRED BUFFERS		
Adjacent Zoning	**Adjacent Land Uses**	**Setbacks for Adjacent Zoning /Buffer required if rezoned**
North: T-4 HN	**One and two story homes/duplexes**	**N/A**
South: T-4 HN	**One and two story homes/duplexes**	**N/A**
East: T-4 HN	**One and two story homes/duplexes**	**N/A**
West: T-4 HN	**One and two story homes/duplexes**	**N/A**

Background: The applicant is requesting final approval for the redevelopment of two blocks: Monson/Prince/King/Wilmington, and Wilmington/Prince/King/Harrington Streets. The proposal would include the block with the old Beaufort County Jail, and the Beaufort County Health office. The project is being proposed in conjunction with the County, with the intent to redevelop these blocks into infill attainable workforce housing. The Old Jail redevelopment was approved by the HRB in 2020 to turn the jail into residential units. The project submitted has been in the works for some time and includes three HTRC meetings this year. It was then approved at a conceptual level at the September 2023 HRB

meeting. In this time, the Applicant has made a number of changes, from changing the layout and eliminating a large parking lot Staff did not feel would fit with the context of the surrounding neighborhood. Old Sanborn maps depict a similar alley style, small house pattern around the site, but not on the two blocks themselves. The old jail was built in 1935.

Changes Since Conceptual Approval:

The final has the same number of units and on-site parking spaces, with the following changes made since conceptual approval:

- Removal of parking spaces immediately adjacent to alley entrance as per recommendation.
- Relocation of six parking spots from behind northwest lots to the center of the old jail block.
- Changes in product type and layout on the old jail block: replacing 5 model types but keeping the same overall density (i.e, the same number of duplexes, and single-family houses).

Site Plan

The project itself comprises 1.75 acres along two entire blocks (with the subtraction of the old jail redevelopment on the western block) and adds a 16' alley in the middle which terminates into a parking lot for the old jail redevelopment housing and goes out to Harrington on the Eastern block. The proposed development would add 16 single family homes, 9 duplexes, and 4 fourplexes, for a total of 48 new dwelling units. Of the 48 dwelling units, only two duplexes are proposed for the western Monson/Wilmington/King/Prince, while 11 single family homes are proposed. However, this block would house the old jail redevelopment housing. The remainder of the seven duplexes, four fourplexes, and five single family homes, are on the Eastern Wilmington/King/Prince/Harrington block. The applicant is not proposing to subdivide the blocks—thus the blocks will be retained by one owner and shall either be rented out as per the current proposal or turned into a horizontal property regime.

Parking There are 67 on-site parking spaces, and 20 street parking spaces which can be counted towards the project. This does satisfy the development code's parking requirements, as parking is counted by bedrooms, and many of the units (see site plan table) are one bedroom only.

Height

The applicant has provided a streetscape of the existing homes in the area, and of the proposed units. One important thing to note is the fact that all but the cottage unit, are two-story units. The majority of units on the adjoining blocks are one story.

Architecture

The applicant has provided a streetscape with front façade elevations for all of the proposed units and floorplans. All units feature front porches, clapboard siding, columns, metal roofs, and substantial fenestration. Basic floorplans were included on the streetscape. The fourplexes and duplexes are being proposed as a flat style of development, wherein units will be on the upper and lower floors.

Findings for New Historic Infill

Section 4.7 of the Development sets the standards the HRB must use in considering an infill project in the historic district. Section 4.7 states, "The District is the Resource, Not Only Its Individual Parts: Beaufort is comprised of a number of individually significant buildings. Additionally, Beaufort's historic areas are significant as a collective whole, and shall be considered as such and protected in their entirety. This is the primary, overarching principle." To this end , seven integrity standards found in Section 4.7.2 — why, where and when a property is important — were created to be upheld in all new construction and rehabilitation projects. Guidelines for determining integrity, and staff analysis of each are found below:

4.7.2 Integrity Guidelines	**Rationale Present (yes/no)**	**Staff Analysis of Rationale**
1. Location: This is the relationship between the property and its historical context.	**Yes**	✓ The blocks were used for many years as county services, including a jail, that never entirely fit into the residential nature of the surrounding area. ✓ The surrounding area has one and story buildings, and some limited duplexes and townhouses similar to this proposal.

2. Design: This is the combination of elements that create the feeling of a district or structure. These elements include building patterns, streetscapes, site elements, building size, mass and scale, spatial relationships, and specific architectural elements and details	**Yes (w/ condition)**	▪ The proposed structures, architectural details, mass and scale of the buildings attempt to match the Beaufort style and are sensitive to the surrounding area, while still providing much- needed attainable housing. ▪ The streetscape with 11 similar sized single family homes, and just two duplexes on the old jail/ Monson/Prince/King/Wilmington block does not represent the diversity of mass and scale of buildings in the area. ▪ Staff acknowledges that this block already has the old jail redevelopment properties and thus greatly physically limited for parking, etc.; Therefore, staff would recommend alternating single family floorplans, especially more of the one story cottage option, so the density needed to achieve attainable workforce housing may be kept. ▪ Consider swapping one or two of the single family floor plans with a one story option, rather than two stories. This would make for a more consistent housing type to the surrounding neighborhood.

3. Setting: This is the physical environment of a property and should be evaluated on its context as well as on the historical role the property has played and continues to play. Important features include topography, vegetation, man-made features, and relationships between existing structures and their surroundings.	**Yes**	✓ Institutional uses that once existed are not consistent with the residential area of the surrounding blocks. ✓ Adding well-designed attainable workforce housing is consistent with the setting of the adjoining blocks,
4. Materials: These are the physical elements that make up a property or district.	**Yes**	✓ The buildings possess the architectural details and materials such as porches, clapboard, metal roofs, and fenestration of the Beaufort style. ✓ Again, consider swapping out one or two of the single family floorplans with a one story cottage option to lightens the streetscape and better match the physical elements of the surrounding blocks.
5. Workmanship: This is the physical evidence of the crafts of a particular culture or time period. This particularly applies to rehabilitation projects, but for new infill projects, workmanship of surrounding structures should be considered and respected. Retaining the details of the original craft and craftsman (i.e., wood, masonry, tabby etc.) of the original building ensures the historic fabric is retained and serves as an important component of the integrity and the patina of age of individual structures and the district as a whole.	**Yes/w** **condition**	✓ The buildings possess the architectural details and materials such as porches, clapboard, metal roofs, and fenestration of the Beaufort style. ✓ The surrounding buildings are generally of a Beaufort working-class vernacular style, and again, the addition of a more basic cottage floor plan would better match the workmanship of the surrounding

		area.
6. Feeling: This is the property's expression of the aesthetic or historic sense of a particular period of time. This particularly applies to rehabilitation projects, but for new infill projects, the feeling of surrounding structures should be considered and respected.	**Yes/w** **condition**	✓ As aforementioned in analysis of pervious integrity principles, Staff would recommend removing one- or two of the two-story single-family plans, and adding a one-story cottage option that would be more consistent with the feeling of the adjoining blocks. ✓ Staff would recommend sprinkling in the one-story cottage option on the old Jail block to better match the feeling of the adjoining blocks, which are not entirely narrow two story single family homes as proposed.
7. Association: This is the direct link between an important historic event or person and a property. This particularly applies to rehabilitation projects, but for new infill projects, association of particular sites and neighborhoods should be considered.	**Yes**	✓ The applicant is already redeveloping and retaining the character of the old Jail site.

FINDINGS AND RECOMMENDATIONS

Staff Recommendation:

Staff recommends Final approval of the proposed development on the two blocks of Monson/Prince/King/Wilmingto, and Wilmington/Prince/King/Harrington Streets in that it satisfies the intent of the Beaufort Preservation Manual and requirements of the Beaufort Development Code, including section 4.7, with the following conditions:

1. **Applicant to note that all siding and trim to be smooth per the Beaufort Code.**
2. **Regarding the Wharf Street Cottage, section detail 2 on sheet 4, staff recommends the concrete slab be extended such that the stucco finish coat is aligned under the edge of the column base, so the columns are visually supported by the foundation.**
3. **King's Court II, detail 2 sheet 4 has a graphical error of the orientation of the porch roof and foundation. Applicant to correct prior to permit drawing submittal.**
4. **The Taylor, detail 2, sheet 3, the stucco finish and CMU foundation wall should be pushed out to align with the outer face of the column base, so the column is visually supported by the foundation.**
5. **The Taylor II, detail 2, sheet 3, the stucco finish and CMU foundation wall should be pushed out to align with the outer face of the column base, so the column is visually supported by the foundation.**
6. **The Euhaw Creek Cottage – right elevation sheet 4 illustrates two narrow double-hung windows. Staff recommends the applicant replace these two windows with a single window at the tub.**
7. **Where shown on the elevations, applicant to clarify if "shake siding" is real shake or cementitious. The applicant to provide a cutsheet to the product.**
8. **Applicant to add a note in the drawings that the windows and doors are to have exterior SDL grilles and spacer bars between the glass.**
9. **Staff supports the applicant selecting several asphalt shingle colors for more**

architectural diversity rather than the single-color Fox Hollow Gray from GAF.

10. **Applicant to submit cutsheets for all exterior lights – some detail sheets show a different fixture than the one submitted in the packet. Staff is supportive of a variety of exterior lights.**
11. **Applicant to provide a final exterior color chart with color names identified for each structure.**
12. **Staff noticed the project design has different door designs throughout the project, but only one cutsheet was provided for one door design. The applicant shall submit all cutsheets for all door designs used. Staff supports a variety of door designs.**
13. **Applicant to provide detail or cutsheets of any gable vents proposed.**
14. **Applicant to provide details or cutsheets of all metal chimney caps/spark arrestors and note color/finish.**
15. **Applicant to provide detail or cutsheet of all flood vents and note color/finish.**
16. **Applicant to demonstrate compliance with Appendix C.5.5 and C.5.8 regarding applicable street sections.**

DEVELOPMENT REVIEW PROCESS

HISTORIC REVIEW BOARD APPLICATION

Community & Economic Development Department
1911 Boundary Street, Beaufort, South Carolina, 29902
p. (843) 525-7011 / f. (843) 986-5606
www.cityofbeaufort.org

☐ Staff Review
☐ Board Review

Application Fee:
see attached schedule

OFFICE USE ONLY: **Date Filed:** _____ **Application #:** _____ **Zoning District:** _____
BCAGHS Survey: ☐ **Yes** ☐ **No**

Schedule: The Historic Review Board (HRB) typically meets the 2nd Wednesday of each month at 2pm. The complete schedule, along with the list of deadlines, may be found here - http://www.cityofbeaufort.org/historic-review-board.aspx

Submittal Requirements: All forms and information shall be submitted digitally. In addition to a complete application form, applicants shall submit the required items according to the checklists on the subsequent page.

Review Request: ☐ Conceptual ☐ Preliminary ■ Final ☐ Bailey Bill Approval* ☐ Change After Certification
**Requires a Bailey Bill – Part A Preliminary Review Application Form*

Pursuant to Section 6-29-1145 of the South Carolina Code of Laws, is this tract or parcel restricted by any recorded covenant that is contrary to, conflicts with, or prohibits the activity described in this application? ☐ **Yes** ■ **No**

Applicant, Property, and Project Information

Applicant Name: Ashley Randolph

Applicant Address: 1003 Charles St., Beaufort, SC

Applicant E-mail: ashleyr@allisonramseyarchitect.con Applicant Phone Number: 843-986-0559

Applicant Title: ☐ Homeowner ☐ Tenant ■ Designer ☐ Engineer ☐ Developer

Owner (if other than the Applicant): Wheeler & Wheeler LLC

Owner Address: 1711 Gervais St., Columbia, SC

Project Name: Wheeler & Wheeler

Property Address: 1407 King Street, Beaufort, SC

Property Identification Number *(Tax Map & Parcel Number):* R120 004 000 0598 0000; R120 004 000 1009 000(

Date Submitted: 10-20-2023

Certification of Correctness: I/we certify that the information in this application is correct.

Applicant's Signature: Ashley Randolph Date: 10-20-2023

Owner's Signature: _____ Date: _____

(The owner's signature is required if the applicant is not the owner.)

DEVELOPMENT REVIEW PROCESS

HISTORIC REVIEW BOARD APPLICATION

Community & Economic Development Department
1911 Boundary Street, Beaufort, South Carolina, 29902
p. (843) 525-7011 / f. (843) 986-5606
www.cityofbeaufort.org

Project Name: Wheeler & Wheeler

Property Size in Acres: 3.40 acres Proposed Building Use: Residential

Nature of Work (check all that apply):

☐ New Construction, Primary Structure ■ New Construction, Primary Structure ☐ Alterations / Additions

☐ Demolition* ☐ Relocation* **Demolition and Relocation requires a public hearing*

Building Square Footage (if multiple buildings, please list each one and their square footage by floor):
(see drawing set)

Is this project a redevelopment project: ☑ Y ☐ N

Are there existing buildings on the site? ☑ Y ☐ N if yes, will they remain? ☐ Y ☑ N

Provide a brief Project Narrative (if requesting Bailey Bill Approval, this section may be left blank):

Redeveloping a block at the intersection of Monson, Wilmington, Prince, and King Street with single family houses, duplexes, and 4-plexes.

CONTACT INFORMATION –

Attention: Julie A. Bachety, Administrative Assistant II
City of Beaufort Department of Planning & Development Services
1911 Boundary Street, Beaufort, South Carolina 29902
E-Mail: jbachety@cityofbeaufort.org: | Phone: (843) 525-7011 | Fax: (843) 986-5606

Revised April 16, 2021

HISTORIC DISTRICT REVIEW BOARD CERTIFICATE OF APPROPRIATENESS

Application Requirements

The Beaufort Code applies to all projects; the Historic District Infill Design Guidelines in Section 4.7 apply to new construction in the Historic District.

The Historic Review Board also utilizes the following documents when evaluating projects:

- *The Beaufort Preservation Manual* & *Supplement:* these standards apply to New Construction, Alterations and Additions to Contributing Structures, and Demolition located everywhere in the Historic District except the Northwest Quadrant.
- *The Northwest Quadrant Design Guidelines:* these standards apply to New Construction, Alterations and Additions to Contributing Structures, and Demolition located in the Northwest Quadrant of the Historic District
- The Secretary of the Interior's *Standards for Rehabilitation:* these standards apply to all modifications to Contributing Structures throughout the Historic District

All documents can be found online at www.cityofbeaufort.org

- The Beaufort Code can be found here: http://www.cityofbeaufort.org/434/Zoning
- Documents specific to the Historic District, a map of the Historic District and neighborhoods, and the list of Contributing and Non-Contributing Structures can be found here: http://www.cityofbeaufort.org/350/1997-Beaufort-County-Historic-Sites-Surv

NOTE 1: If a New Construction project also requires major demolition a separate application is required. (Refer to the Checklist for Demolition on page 3).

NOTE 2: Applications will not be considered complete until all the required items have been submitted. Incomplete applications will not be placed on the agenda.

NOTE 3: Applications are to be compiled in the order in which the applicant plans to present the application to the Board during the meeting.

Submission Requirements for New Construction and Alterations or Additions

Please submit DIGITAL FILES ONLY via email to: jbachety@cityofbeaufort.org

*Initial submittals should show existing and proposed conditions. For all subsequent submittals, architectural drawings should show and clearly label existing conditions, the previous proposal, and the current proposed. Each version of the same drawing should be adjacent to the others in the application for easy review.

***This Application Requirements Checklist MUST be included in applications, with submitted items checked.**

Conceptual Review

- ☐ **Existing Context:** Color photographs of the existing structure and the adjacent structures.
- ☐ **Plat:** A plat indicating the tax map and parcel number, existing structure(s), setbacks, existing trees, and proposed construction footprint.
- ☐ **Site Plan:** A site plan, to scale, indicating the location of the existing structure on the lot, proposed new structure, any site modifications (parking, paths, landscaping, tree removal, etc…), any new or existing mechanical equipment and screening area, and percentage of the total impervious paving. The plan should also include any connections to the public right of way (street and/or sidewalk), and grade elevations of the street and/or sidewalk and the proposed construction at the first floor.
- ☐ **Design:** One or more drawings that convey the intent of the proposal. This may include: floor plans, elevations, and building sections. They should display massing and scale of new construction and how it relates to the existing structure or surrounding context. For new construction and additions, this drawing should include a street elevation and/or a street section showing height and width relationships to existing adjacent buildings.
- ☐ **3-D Rendering:** A 3-D rendering, or physical scale model, showing the height, mass and scale of the proposed building in its context is required for all structures except single-family and 2-3 unit residential buildings.
- ☐ **Pre-Application Conference:** A Pre-application conference is required for all commercial new construction and substantial commercial renovation projects. The requirement for an Archeological Impact Assessment will be determined at this meeting.

Preliminary Review: All the documents required for Conceptual Review, PLUS:

- ☐ **Floor Plans:** Proposed floor plans of all levels of the building, including square footage. For Alterations or Additions, existing conditions drawings of the floor plan are also required, showing the area and square footage affected by the addition.
- ☐ **Elevations:** Elevation drawings of all sides of the building, including heights – height above grade, floor-to-floor heights, eave height and ridge height (if applicable). For Alterations or Additions, existing conditions drawings of all four elevations are also required.
- ☐ **Color Rendering:** A colored version of at least one elevation, noting proposed materials and colors.
- ☐ Additional on-site representation, such as a height story pole, and corner staking of the foundation, may be required.
- ☐ A Certified Arborist report may be required if grand trees are affected by the project.

Final Review: All the documents required for Preliminary Review, PLUS:

- ☐ **Details:** A typical wall section(s), window details, door details, eave details, porch details, and any other details characteristic to the building are required.
- ☐ **Material Samples and Cut Sheets:** Applicant to submit cut sheets for all exterior building materials, to include roof and typical roof details, doors, windows, dryer vents, exterior lighting, etc. Samples of windows, lighting and building materials may be required at Staff's discretion.
- ☐ **Final Materials List:** A final list, including colors, is required.
- ☐ **Landscaping Plan:** A landscaping plan is required for commercial projects. It shall include a schedule detailing materials and colors of all plants and landscape materials, all existing trees, with the trees to be removed noted, existing and proposed grading, and any exterior lighting proposed.

Submission Requirements for Change After Certification

Please submit DIGITAL FILES ONLY via email to: jbachety@cityofbeaufort.org

Change After Certification:

- ☐ **Copy of Certificate of Appropriateness** received with previous approval.
- ☐ **Previously Approved Drawings:** Applicant to submit **complete** set of previously approved documents. Current proposed documents to be interlaced between previously approved documents and must be formatted to match previously approved. For example, previously approved elevations should be followed by current proposed. Drawings to be clearly noted as "Previously Approved" or "Current Proposed", and all proposed revisions in the current proposed drawings must be clouded and noted.

Submission Requirements for Demolition or Relocation

Please submit DIGITAL FILES ONLY via email to: jbachety@cityofbeaufort.org

Note: A public hearing must be held for Demolition or Relocation. All notification requirements must be met by the City.

- ☐ A written statement describing the history of the architectural significance of the structure to be demolished, the structural or physical condition of the structure, and the proposed use of the site after demolition or relocation. The statement should also include any recent attempt(s) to sell the property, or move the structure. A recent appraisal with comparisons is strongly encouraged. You may refer to *The Beaufort County Above Ground Resources Survey of 1997,* or consult city staff or the Historic Beaufort Foundation for verification of the date of constructionand historic information.
- ☐ Tax map or plat showing the location of the property
- ☐ Color photographs of all sides of the structure.
- ☐ Color photographs of adjoining properties.
- ☐ A written report by an engineer, regarding the structural condition of the building, is required ifthe reason for demolition is related to the structural integrity of the building.
- ☐ A landscaping plan/or conceptual redevelopment plan, is required.

HISTORIC DISTRICT REVIEW BOARD
FEE SCHDULE

(As of July 1, 2020)

BOARD REVIEW FEES:

Single-family residential projects (board review)	$100.00
Multifamily and commercial projects (board review)	$250.00
Change After Certification	$100.00
Demolition (whole structure)	$250.00
Special Board Meeting	$500.00

Post facto applications shall be triple the normal fee.

STAFF REVIEW FEES:

Single Family and 2/3-unit buildings not in a historic district are exempt.

Type 1

Renovations/Improvements (not including additions), ≤ 50% of the value of the structures

Value	Fee
Improvements ≤ $5,000	$50
Improvements > $5,000 but ≤ $25,000	$50 + 0.25% x value above $5,000
Improvements > $25,000	$100 + 0.20% x value above $25,000

Type 2

- Any single-family and 2/3-unit residential addition in a historic district: $50
- All other additions: $500 base fee + $0.05/square foot of addition.

Type 3

Review for new construction and for renovations/improvements totaling over 50% of the value of the structure:

- Single-family and 2-3 unit residential in the historic district
- ≤ 10,000 square feet: $500 base fee + 0.05/square foot of building

- > $10,000 square feet: $1,000 base fee + $0.05/square foot of building for the first 100,000 square feet of building. For additional square footage over 100,000, $0.02/square foot.



CONCEPTUAL RENDERING

WHEELER & WHEELER

CITY OF BEAUFORT, SOUTH CAROLINA

WHEELER & WHEELER

CITY OF BEAUFORT, SOUTH CAROLINA

ALLISON RAMSEY Architects Inc. creating sustainable timeless design

1003 Charles St.
Beaufort SC. 29902
(843) 986-0559
www.allisonramseyarchitect.com

THIS PLAN HAS BEEN PREPARED TO MEET TOP PROFESSIONAL STANDARDS AND PRACTICES. ENGINEER, BUILDING CODES AND ENVIRONMENTAL CONDITIONS VARY FOR DIFFERENT LOCATIONS. IT IS THE RESPONSIBILITY OF THE PURCHASER OF THIS PLAN TO PROVIDE THE FOLLOWING BEFORE BEGINNING CONSTRUCTION. ALLISON RAMSEY ARCHITECTS, INC. ASSUMES NO LIABILITY FOR ANY HOME CONSTRUCTED FROM THIS PLAN.

- VERIFY ALL DIMENSIONS PRIOR TO PROCEEDING WITH CONSTRUCTION
- VERIFY COMPLIANCE WITH ALL LOCAL CODES
- PLANS INDICATE LOCATIONS ONLY, ENGINEERING ASPECTS SHOULD INCORPORATE ACTUAL SITE CONDITIONS.
- HVAC + PLUMBING LAYOUTS ARE NOT INCLUDED. THESE SHOULD BE OBTAINED FROM A LOCAL MECH. CONTRACTOR OR ENGINEER TO ENSURE COMPLIANCE WITH LOCAL CODE AND THAT EQUIPMENT IS SIZED CORRECTLY FOR YOUR PARTICULAR REGION AND CONDITIONS.
- VERIFY ALL STRUCTURAL ELEMENTS WITH LOCAL ENGINEER AND/OR ARCHITECT.

DATE:	10/27/2023
JOB NO.	23408
DWN. BY:	JWA5
DWG. NAME:	WHEELER + WHEELER.DWG

Copyright 2023 by Allison Ramsey Architects, Inc. All rights reserved.

0

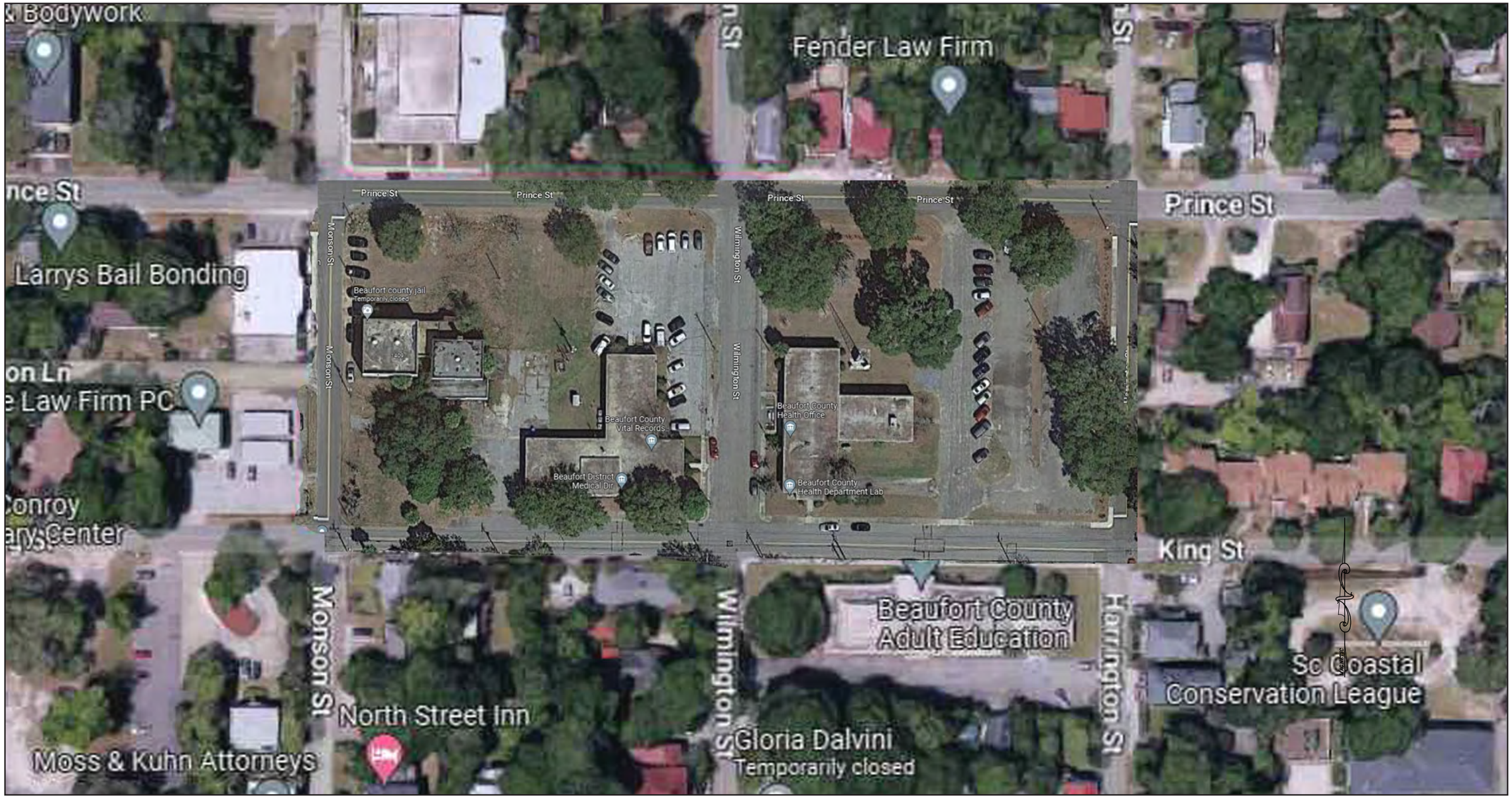
Bodywork
Fender Law Firm
Prince St
Larrys Bail Bonding
Law Firm PC
Conroy
Monson St
Wilmington St
Beaufort county jail
Temporarily closed
Beaufort County
Vital Records
Beaufort District
Medical Dir
Beaufort County
Health Office
Beaufort County
Health Department Lab
King St
Beaufort County
Adult Education
Harrington St
Sc Coastal
Conservation League
North Street Inn
Moss & Kuhn Attorneys
Gloria Dalvini
Temporarily closed



1407 PRINCE STREET



607 HARRINGTON STREET



1215 PRINCE STREET



1315 PRINCE STREET



1307 PRINCE STREET



1311 PRINCE STREET



1313 PRINCE STREET



1401 PRINCE STREET



1215 & 1217 KING STREET



1214 KING STREET

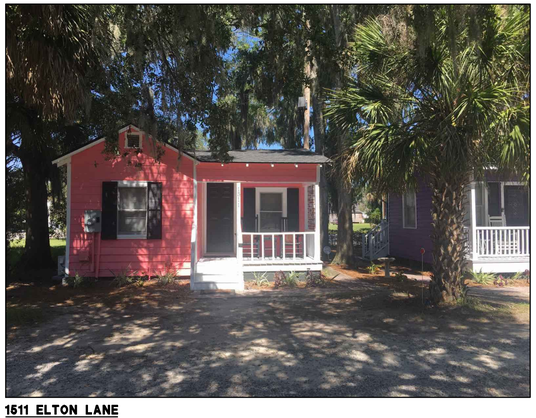

1511 ELTON LANE



1405 PRINCE STREET



1501 NORTH STREET

WHEELER & WHEELER

BEAUFORT, SOUTH CAROLINA

ALLISON RAMSEY Architects Inc. creating sustainable timeless design
1003 Charles St.
Beaufort SC, 29902
(843) 986-0559
www.allisonramseyarchitect.com

THIS PLAN HAS BEEN PREPARED TO MEET TOP PROFESSIONAL STANDARDS AND PRACTICES. HOWEVER, BUILDING CODES AND ENVIRONMENTAL CONDITIONS VARY FOR DIFFERENT LOCATIONS. IT IS THE RESPONSIBILITY OF THE PURCHASER OF THIS PLAN TO PERFORM THE FOLLOWING BEFORE BEGINNING CONSTRUCTION. ALLISON RAMSEY ARCHITECTS, INC. ASSUMES NO LIABILITY FOR ANY HOME CONSTRUCTED FROM THIS PLAN.

- VERIFY ALL DIMENSIONS PRIOR TO PROCEEDING WITH CONSTRUCTION
- VERIFY COMPLIANCE WITH ALL LOCAL CODES
- PLANS INDICATE LOCATIONS ONLY, ENGINEERING ASPECTS SHOULD INCORPORATE ACTUAL SITE CONDITIONS.
- MAKE A PLUMBING LAYOUT'S ARE NOT INCLUDED. THESE SHOULD BE OBTAINED FROM A LOCAL MECH. CONTRACTOR OR ENGINEER TO ENSURE COMPLIANCE WITH LOCAL CODE AND THAT EQUIPMENT IS SIZED CORRECTLY FOR YOUR PARTICULAR REGION AND CONDITIONS.
- VERIFY ALL STRUCTURAL ELEMENTS WITH LOCAL ENGINEER AND/OR ARCHITECT.

DATE:	08/30/2023
JOB NO.	23408
DWN. BY:	JWA5
DWG. NAME:	WHEELER + WHEELER.DWG

Copyright 2023 by Allison Ramsey Architects, Inc. All rights reserved.

S2

WHEELER + WHEELER BUILDING PLAN LEGEND

DESIGNATION	PLAN TITLE	UNIT TYPE	# BEDROOM
A	WASHINGTON DUPLEX	DUPLEX	1
B	MANSION FLATS	4-PLEX	1
C	HARRINGTON DUPLEX	DUPLEX	2
D	MAIL + BIKE PAVILIONS	AMENITY	
E	WHARF STREET COTTAGE	SINGLE-FAMILY	1
F	KING'S COURT DUPLEX	DUPLEX	1
G	TAYLOR	SINGLE-FAMILY	3
H	ALLENDALE	SINGLE-FAMILY	2
I	JAMES (GABLE)	SINGLE-FAMILY	2
J	KING'S COURT DUPLEX II	DUPLEX	1
K	EUHAW COTTAGE	SINGLE-FAMILY	3
L	CARSON'S COTTAGE	SINGLE-FAMILY	2
M	JAMES (HIP)	SINGLE-FAMILY	2
N	TAYLOR II	SINGLE-FAMILY	3



SITE PLAN

NOT TO SCALE

WHEELER & WHEELER

CITY OF BEAUFORT, SOUTH CAROLINA

ALLISON RAMSEY Architects Inc. creating sustainable timeless design
1003 Charles St.
Beaufort SC, 29902
(843) 986-0559
www.allisonramseyarchitect.com

THIS PLAN HAS BEEN PREPARED TO MEET TOP PROFESSIONAL STANDARDS AND PRACTICES. HOWEVER, BUILDING CODES AND ENVIRONMENTAL CONDITIONS VARY FOR DIFFERENT LOCATIONS. IT IS THE RESPONSIBILITY OF THE PURCHASER OF THIS PLAN TO PREPARE THE FOLLOWING BEFORE BEGINNING CONSTRUCTION: ALLISON RAMSEY ARCHITECTS, INC. ASSUMES NO LIABILITY FOR ANY WORK CONSTRUCTED FROM THIS PLAN.

•VERIFY ALL DIMENSIONS PRIOR TO PROCEEDING WITH CONSTRUCTION
•VERIFY COMPLIANCE WITH ALL LOCAL CODES
•PLANS INDICATE LOCATIONS ONLY, ENGINEERING ASPECTS SHOULD INCORPORATE ACTUAL SITE CONDITIONS.
•MAG + PLUMBING LOCATIONS ARE NOT INCLUDED. THESE SHOULD BE OBTAINED FROM A LOCAL MECH. CONTRACTOR OR ENGINEER TO ENSURE COMPLIANCE WITH LOCAL CODE AND THAT EQUIPMENT IS SIZED CORRECTLY FOR YOUR PARTICULAR REGION AND CONDITIONS.
•VERIFY ALL STRUCTURAL ELEMENTS WITH LOCAL ENGINEER AND/OR ARCHITECT.

DATE:	10/27/2023
JOB NO.	23408
DWN. BY:	JWA5
DWG. NAME:	WHEELER + WHEELER.DWG

S

Copyright 2023 by Allison Ramsey Architects, Inc. All rights reserved.

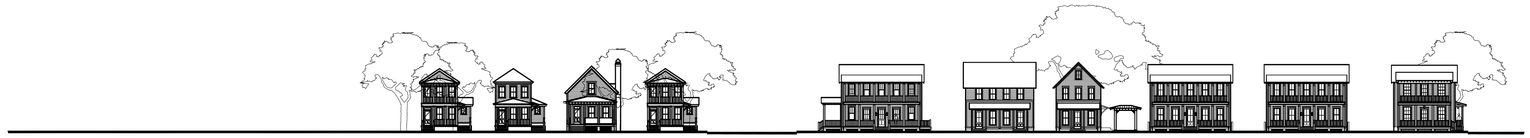

KING STREET ELEVATION



3/32" = 1'-0"

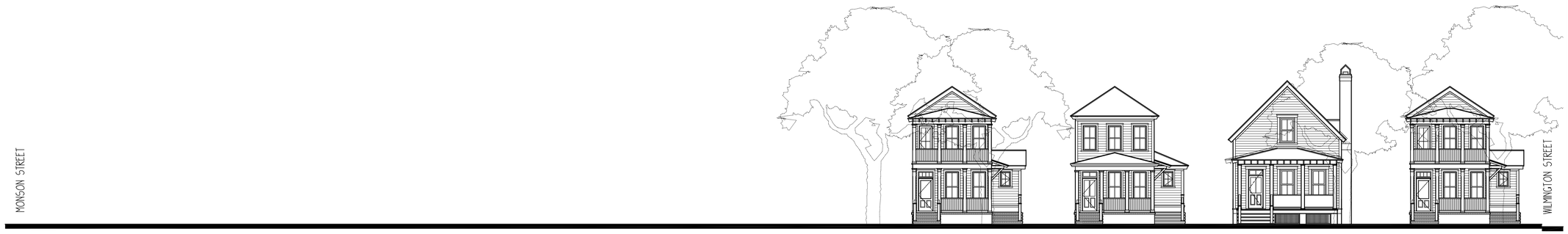

3/32" = 1'-0"

Copyright 2023 by Allison Ramsey Architects, Inc. All rights reserved.

WHEELER &
WHEELER
BEAUFORT, SOUTH CAROLINA

ALLISON RAMSEY
Architects, P.A., creating sustainable timeless design
1003 Charles St.
Beaufort SC, 29902
(843) 986-0359
www.allisonramseyarchitect.com

THIS PLAN HAS BEEN PREPARED TO MEET CITY PRESCRIPTIVE STANDARDS AND POLICIES. HOWEVER, BUILDING CODES AND ENVIRONMENTAL CONDITIONS VARY FOR DIFFERENT LOCATIONS. IT IS THE RESPONSIBILITY OF THE PURCHASER OF THIS PLAN TO PERFORM THE FOLLOWING BEFORE CONSTRUCTION: CONSULT WITH A LOCAL AGENT, ARCHITECT, OR ENGINEER TO ENSURE COMPLIANCE WITH ALL LOCAL CODES AND ORDINANCES. VERIFY ALL DIMENSIONS PRIOR TO PROCEEDING WITH CONSTRUCTION. VERIFY COMPLIANCE WITH ALL LOCAL CODES. PLANS INDICATE LOCATIONS ONLY; ENGINEERING EXPERTS SHOULD INCORPORATE ALL MEP SYSTEMS. HVAC & PLUMBING LAYOUTS ARE NOT INCLUDED. THESE SHOULD BE OBTAINED FROM A LOCAL MECH. CONTRACTOR OR ENGINEER TO ENSURE COMPLIANCE WITH LOCAL CODE AND TRUE ELEVATIONS. SEEK LOCAL CITY OR TOWN PLANNING REVIEW AND CONDITIONS. COPYRIGHT © ALLISON RAMSEY ARCHITECTS, INC. ALL RIGHTS RESERVED.

DATE:	10/26/2023
JOB NO.	2340B
DWN. BY:	JWMS
DWG. NAME: WHEELER + WHEELER.DWG	

S2



PRINCE STREET ELEVATION



3/32" = 1'-0"



3/32" = 1'-0"

Copyright 2023 by Allison Ramsey Architects, Inc. All rights reserved.

WHEELER &
WHEELER
BEAUFORT, SOUTH CAROLINA

ALLISON RAMSEY
Architects PLLC creating sustainable timeless design
1003 Charles St
Beaufort SC, 29902
(843) 986-0559
www.allisonramseyarchitect.com

THIS PLAN HAS BEEN PREPARED TO MEET CITY PROFESSIONAL STANDARDS AND PRACTICES. HOWEVER, BUILDING CODES AND ENVIRONMENTAL CONDITIONS VARY FOR DIFFERENT LOCATIONS. IT IS THE RESPONSIBILITY OF THE PURCHASER OF THIS PLAN TO REVIEW THE FOLLOWING BEFORE ARRANGING FOR CONSTRUCTION. ALLISON RAMSEY ARCHITECTS, PLLC ASSUMES NO LIABILITY FOR ANY HOME CONSTRUCTED FROM THIS PLAN.

- VERIFY COMPLIANCE WITH ALL LOCAL CODES
- VERIFY ALL DIMENSIONS PRIOR TO POSITIONING WITH CONSTRUCTION
- PLANS INDICATE LOCATIONS ONLY; ENGINEERING ASPECTS SHOULD BE INCORPORATED AS PER LOCAL CODES
- HVAC & PLUMBING LAYOUTS ARE NOT INCLUDED. THESE SHOULD BE OBTAINED FROM A LOCAL HVAC CONTRACTOR OR ENGINEER TO ENSURE COMPLIANCE WITH LOCAL CODE AND PROPER EQUIPMENT & DUCT SIZING FOR YOUR PARTICULAR DESIGN AND CONDITIONS.
- NOTIFY ALL STRUCTURAL SYSTEMS, MEP SYSTEMS, & OWNER'S REPRESENTATIVES OF ANY

DATE:	10/26/2023
JOB NO.	2340B
DWN. BY:	JWAS
DWG. NAME:	WHEELER + WHEELER.DWG

S3

PLEASE SEE 3D MODEL. LINK SHOULD BE PROVIDED:
https://sketchfab.com/3d-models/wheeler-wheeler-beaufort-092640dcf6674982af29663347fb9bbb9

WHEELER & WHEELER

CITY OF BEAUFORT, SOUTH CAROLINA

ALLISON RAMSEY Architects Inc. creating sustainable timeless design
1003 Charles St.
Beaufort SC, 29902
(843) 986-0559
www.allisonramseyarchitect.com

THIS PLAN HAS BEEN PREPARED TO MEET TOP PROFESSIONAL STANDARDS AND PRACTICES, HOWEVER, BUILDING CODES AND ENVIRONMENTAL CONDITIONS VARY FOR DIFFERENT LOCATIONS. IT IS THE RESPONSIBILITY OF THE PURCHASER OF THIS PLAN TO PERFORM THE FOLLOWING BEFORE BEGINNING CONSTRUCTION. ALLISON RAMSEY ARCHITECTS, INC. ASSUMES NO LIABILITY FOR ANY ITEM OR ITEMS CONSTRUCTED FROM THIS PLAN.

- VERIFY COMPLIANCE WITH ALL LOCAL CODES
- VERIFY ALL DIMENSIONS PRIOR TO FABRICATION AND CONSTRUCTION
- PLANS INDICATE LOCATIONS ONLY; ENGINEERING ASPECTS SHOULD BE INCORPORATE
- ALL ARCHITECTURAL FEATURES
- PLUS, 4 PLUMBING LAVATORY ARE NOT INCLUDED. THESE SHOULD BE OBTAINED FROM A LOCAL PLUS CONTRACTOR OR ENGINEER TO ENSURE COMPLIANCE WITH LOCAL CODE AND THAT ELEMENTS IN SIZE CONSISTENT FOR YOUR PARTICULAR REGION AND CONDITIONS.
- ATTN: ALL ELECTRICAL LAYOUTS WITH LOCAL CODES AND APPLICABLE

DATE: 10/27/2023
JOB NO. 23408
DWN. BY: JWAS
DWG. NAME: WHEELER + WHEELER.DWG

Copyright 2023 by Allison Ramsey Architects, Inc. All rights reserved.

S4

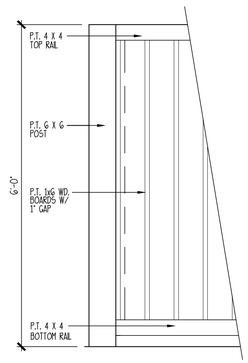

1 SCREENING FENCE DETAIL

SCALE: 3/4" = 1'-0"

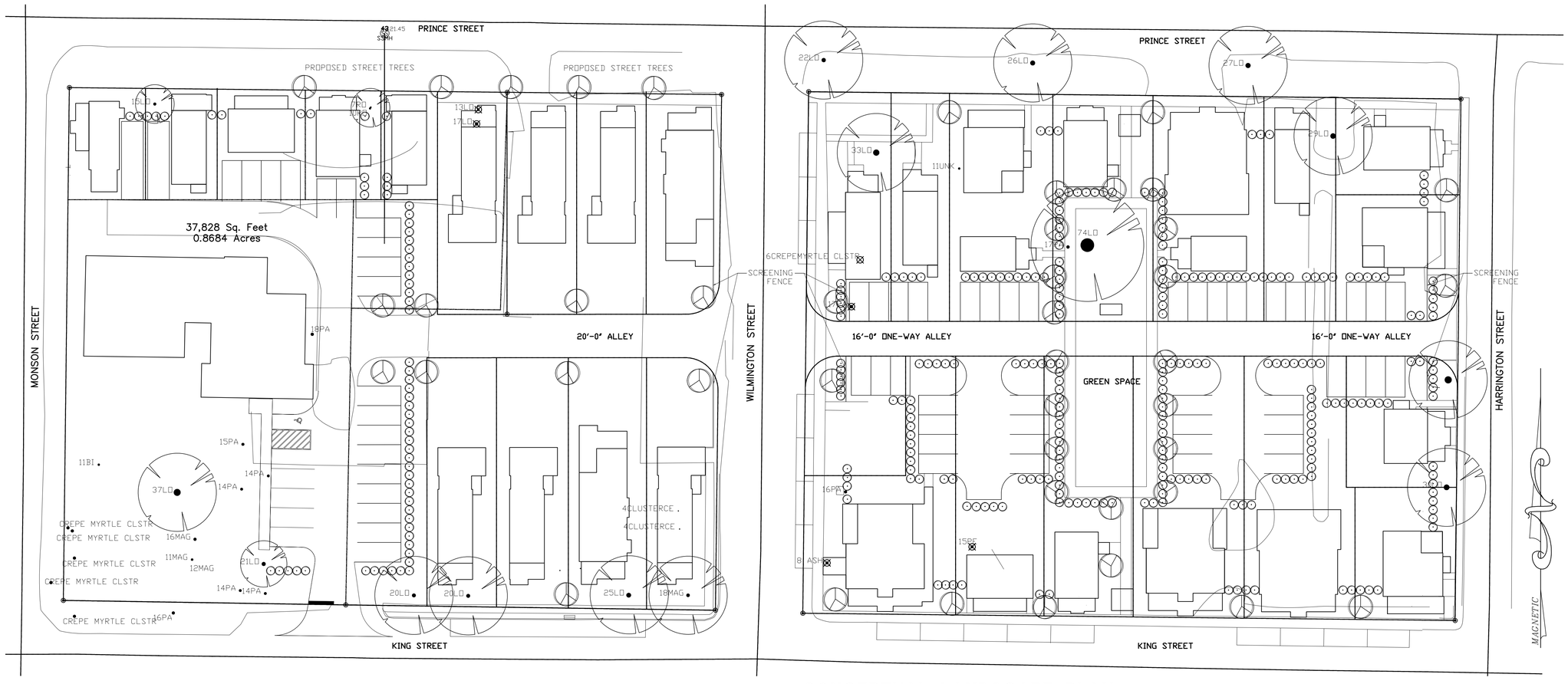

CONCEPTUAL LANDSCAPE PLAN

NOT TO SCALE

PROPOSED SHRUB ROW FOR SCREENING

PROPOSED OVERSTORY/ STREET TREE

15LO EXISTING TREE (W/ SIZE AND SPECIES NOTED)

DENOTES TREE TO BE REMOVED

WHEELER & WHEELER

CITY OF BEAUFORT, SOUTH CAROLINA

ALLISON RAMSEY Architects Inc. creating sustainable timeless design
1003 Charles St.
Beaufort SC, 29902
(843) 986-0559
www.allisonramseyarchitect.com

THIS PLAN HAS BEEN PREPARED TO MEET TOP PROFESSIONAL STANDARDS AND PRACTICES. ENGINEER, BUILDING CODES AND ENVIRONMENTAL CONDITIONS VARY FOR DIFFERENT LOCATIONS. IT IS THE RESPONSIBILITY OF THE PURCHASER OF THIS PLAN TO PERFORM THE FOLLOWING BEFORE BEGINNING CONSTRUCTION. ALLISON RAMSEY ARCHITECTS, INC. ASSUMES NO LIABILITY FOR ANY WORK CONSTRUCTED FROM THIS PLAN.

- VERIFY ALL DIMENSIONS PRIOR TO PROCEEDING WITH CONSTRUCTION
- VERIFY COMPLIANCE WITH ALL LOCAL CODES
- PLANS PROCEED LOCATIONS ONLY, ENGINEERING ASPECTS SHOULD INCORPORATE ACTUAL SITE CONDITIONS.
- MAG & PLUMBING LAYOUTS ARE NOT INCLUDED. THESE SHOULD BE OBTAINED FROM A LOCAL MECH. CONTRACTOR OR ENGINEER TO ENSURE COMPLIANCE WITH LOCAL CODE AND THAT EQUIPMENT IS SIZED CORRECTLY FOR YOUR PARTICULAR REGION AND CONDITIONS.
- VERIFY ALL STRUCTURAL ELEMENTS WITH LOCAL ENGINEER AND/OR ARCHITECT.

DATE:	10/27/2023
JOB NO.	23408
DWN. BY:	JWA5
DWG. NAME:	WHEELER + WHEELER.DWG

Copyright 2023 by Allison Ramsey Architects, Inc. All rights reserved.

L

SYMBOLS + KEYS

DOOR AND WINDOW SIZE KEY

2860 = 2'-8" WIDE x 6'-0" HIGH

DRAWING NUMBER — 1/3 = SECTION OR ELEVATION — SHEET NUMBER

KITCHEN — ROOM TITLE

10" CLG. — CEILING HEIGHT

WOOD — FLOOR FINISH

1 DRAWING TITLE

1 — DETAIL OR ELEVATION NUMBER

14.00' = ELEVATION ABOVE SEA LEVEL

1 = REVISION NUMBER

= REVISION CLOUD

REF. 88 = PLAN REFERENCE NORTH

S	SINGLE POLE SWITCH
S3	THREE WAY SWITCH
S4	FOUR WAY SWITCH
SD	DIMMER SWITCH
SDC	SPEED CONTROL
	DUPLEX OUTLET
	1/2 HOT OUTLET
WP	WATER PROOF OUTLET
GF	GROUND FAULT OUTLET
	QUADRUPLEX OUTLET
	SPECIALTY OUTLET
	FLOOR OUTLET
	TELEPHONE JACK
T	THERMOSTAT
TV	TELEVISION JACK
V	VENT
V/L	VENT w/ LIGHT
	SURFACE MOUNTED FIXTURE
	RECESSED FIXTURE
	WALL MOUNTED FIXTURE
	FLOOD LIGHT
	FLUORESCENT FIXTURE
	CEILING FAN
	STRIP LIGHTING
	CEILING BOX
	DOOR CHIME
	ELECTRICAL PANEL
	SMOKE DETECTOR
CO	CARBON MONOXIDE DETECTOR



CONCEPTUAL RENDERING

DRAWING INDEX

0	COVER SHEET
S	SITE PLAN
1	FOUNDATION PLAN/ ROOF PLAN/ WALL SECTIONS/ DETAILS
2	FLOOR PLANS/ ELEVATIONS
3	ELECTRICAL LAYOUTS/ BUILDING SECTIONS/ DETAILS
SP1	SPECIFICATIONS
SP2	SPECIFICATIONS
SP3	SPECIFICATIONS

GENERAL INFO.

AREA CALCULATIONS

FIRST FLOOR (UNIT A) HEATED = 500 S.F.

SECOND FLOOR (UNIT B) HEATED = 448 S.F.

TOTAL HEATED = 948 S.F.

COVERED PORCH + STOOP = 388 S.F.

WASHINGTON STREET DUPLEX

WASHINGTON STREET DUPLEX

ALLISON RAMSEY Architects, Inc. creating sustainable timeless design

1003 Charles St.
Beaufort SC, 29902
(843) 986-0559
www.allisonramseyarchitect.com

THIS PLAN HAS BEEN PREPARED TO MEET CITY PROFESSIONAL STANDARDS AND PROJECTS. HOWEVER, BUILDING CODES AND ENVIRONMENTAL CONDITIONS VARY FOR DIFFERENT LOCATIONS. IT IS THE RESPONSIBILITY OF THE PURCHASER OF THIS PLAN TO PERFORM THE FOLLOWING BEFORE CONSTRUCTION: CONTACT LOCAL BUILDING OFFICIALS AND ARCHITECT, ALL ACCURACY AND DIMENSIONS SHOULD BE CHECKED FOR ANY HOME CONSTRUCTED FROM THIS PLAN.

•VERIFY COMPLIANCE WITH ALL LOCAL CODES
•VERIFY ALL DIMENSIONS PRIOR TO PROCEEDING WITH CONSTRUCTION
•PLANS INDICATE LOCATIONS ONLY; ENGINEERING ASPECTS SHOULD BE CONSIDERED
ALL ELECTRICAL SPECIFICATIONS
•HVAC & PLUMBING LAYOUTS ARE NOT INCLUDED. THESE SHOULD BE OBTAINED FROM A LOCAL HVAC CONTRACTOR OR ENGINEER TO ENSURE COMPLIANCE WITH LOCAL CODE AND YOUR CLIENT'S NEEDS. CONSULT WITH YOUR CONTRACTOR REGARDING ANY CHANGES TO ELECTRICAL LAYOUTS WITH HVAC, PLUMBING AND APPLIANCES.

Copyright 2018 by Allison Ramsey Architects, Inc. All rights reserved.

DATE:	05/20/2018
JOB NO.	17902
DWN. BY:	JWAS/ CP
DWG. NAME:	7.0.DWG

0

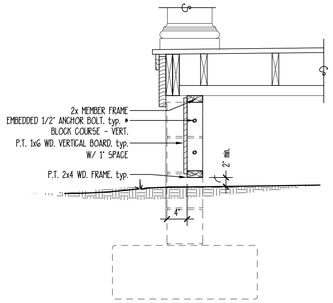

4 VERTICAL HOGSPEN DETAIL

SCALE: 3/4" = 1'-0"

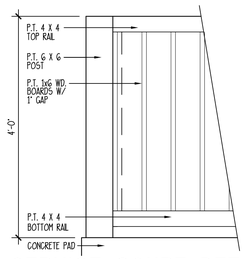

5 SERVICE COURT DETAIL

SCALE: 3/4" = 1'-0"

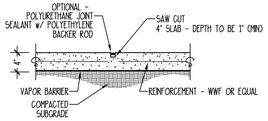

6 CONTROL JOINT DETAIL

SCALE: 3/4" = 1'-0"

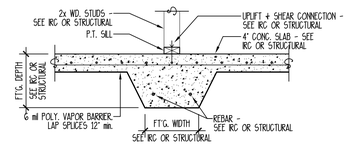

7 THICKENED SLAB DETAIL

NOT TO SCALE

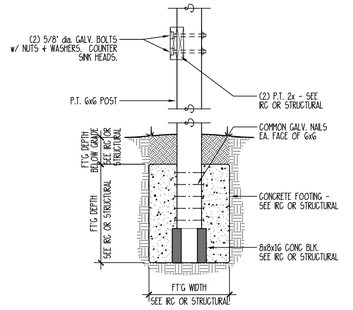

8 6x6 POST DETAIL

SCALE: 3/4" = 1'-0"

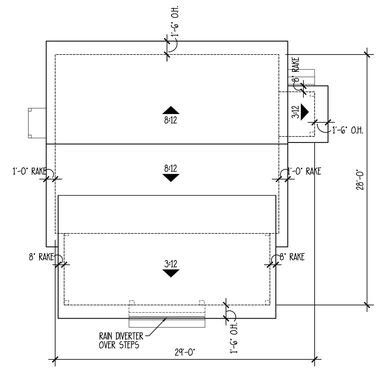

ROOF PLAN

SCALE: 1/8" = 1'-0"

*NOTE:

1. ALL PENETRATIONS TO BE LOCATED AS INCONSPICUOUSLY AS POSSIBLE. * REAR OR SIDES OF HOUSE AS POSSIBLE.
2. ROOF PENETRATIONS NEED TO BE KEPT TO A MINIMUM. (COMBINED WHEN POSSIBLE).
3. ALL ROOF / WALL PENETRATIONS TO BE PAINTED TO MATCH ROOF COLOR.
4. TWO (2) LAYERS UNDERLAYMENT REQUIRED WHEN 4:12 ROOF PITCH OR LOWER.
5. METAL ROOF SEAMS NOT TO EXCEED 16' O.C.
6. METAL ROOF SEAMS TO BE 1 1/2" TO 1 3/4" IN HEIGHT

3 TYPICAL STOOP SECTION

SCALE: 3/4" = 1'-0"

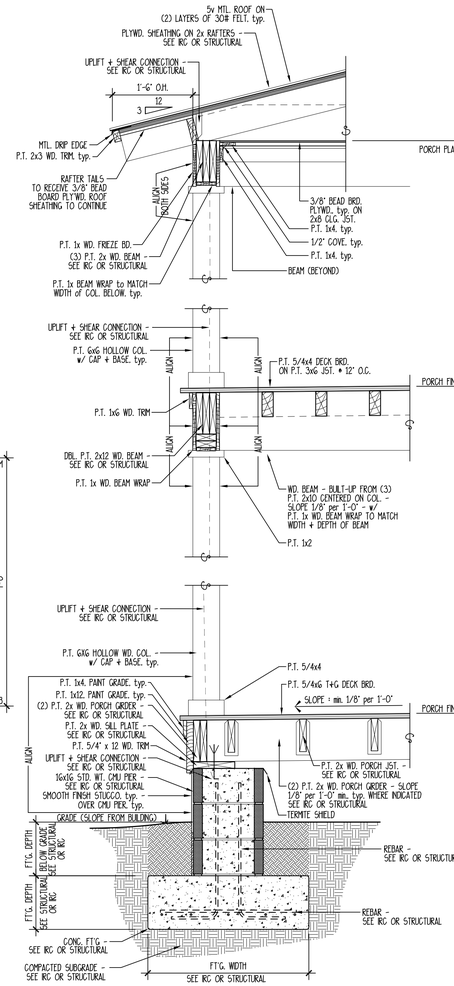

2 TYPICAL PORCH SECTION

SCALE: 3/4" = 1'-0"

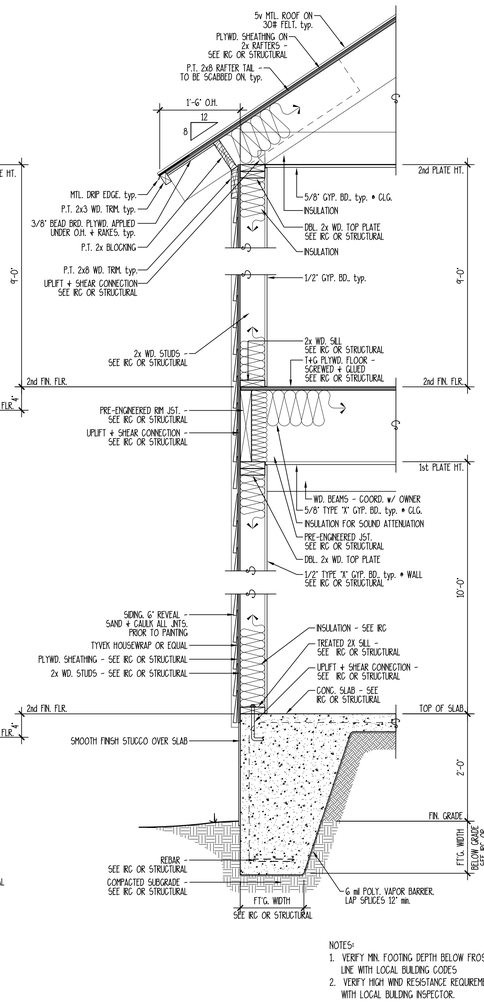

1 TYPICAL WALL SECTION

NOTE: FIRST FLOOR WALLS AND CEILING TO MEET REQUIREMENTS OF UL 263 PER IRC 302.3

SCALE: 3/4" = 1'-0"

NOTES:

1. VERIFY MIN. FOOTING DEPTH BELOW FROST LINE WITH LOCAL BUILDING CODES
2. VERIFY HIGH WIND RESISTANCE REQUIREMENTS WITH LOCAL BUILDING INSPECTOR.

FOUNDATION PLAN

SCALE: 1/4" = 1'-0"

*NOTE:

1. VERIFY MINIMUM FINISHED FLOOR ELEVATION WITH LOCAL CODES.
2. VERIFY MINIMUM FOOTING DEPTH BELOW FROST LINE WITH LOCAL BUILDING INSPECTOR.
3. VERIFY HIGH WIND RESISTANCE REQUIREMENTS WITH LOCAL BUILDING INSPECTOR.

WASHINGTON STREET DUPLEX

ALLISON RAMSEY Architects, inc. creating sustainable timeless design
1003 Charles St.
Beaufort SC, 29902
(843) 986-0559
www.allisonramseyarchitect.com

THIS PLAN HAS BEEN PREPARED TO MEET STRP PROFESSIONAL STANDARDS AND PRACTICES. HOWEVER, BUILDING CODES AND ENVIRONMENTAL CONDITIONS VARY FOR DIFFERENT LOCATIONS. IT IS THE RESPONSIBILITY OF THE PURCHASER OF THIS PLAN TO VERIFY THE FOLLOWING AND MAKE ANY NECESSARY CHANGES PRIOR TO CONSTRUCTION. ALLISON RAMSEY ARCHITECTS, INC. ASSUMES NO LIABILITY FOR ANY HOME CONSTRUCTED FROM THIS PLAN.
- VERIFY ALL DIMENSIONS PRIOR TO PROCEEDING WITH CONSTRUCTION
- VERIFY COMPLIANCE WITH ALL LOCAL CODES
- PLANS INDICATE LOCATIONS ONLY. ENGINEERING ASPECTS SHOULD ACCOMPANY ALL PLANS.
- STRUCT. PLUMBING LAYOUTS ARE NOT INCLUDED. THESE SHOULD BE OBTAINED FROM A LOCAL PROS CONTRACTOR OR ENGINEER TO ENSURE COMPLIANCE WITH LOCAL CODE
- NOTE THAT ELEVATION IS USED SCHEMATICALLY FOR TOPOGRAPHICAL REASON AND CONDITIONS. VERIFY ALL ELEVATIONS & DETAILS WITH SURVEY AND SITE CONDITIONS.

DATE:	05/20/2018
JOB NO.	17902
DWN. BY:	JWAS/ CP
DWG. NAME:	7.0.DWG

Copyright 2018 by Allison Ramsey Architects, Inc. All rights reserved.

1

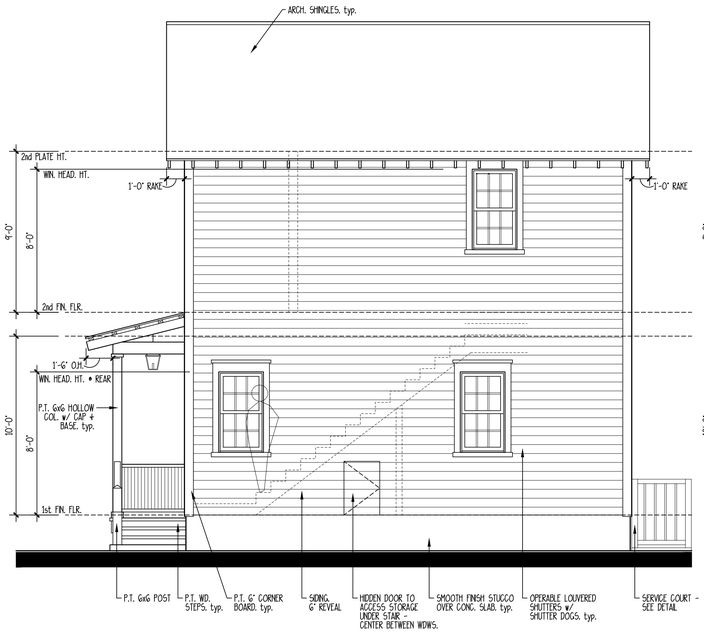

3 REAR ELEVATION

SCALE: 1/4" = 1'-0"

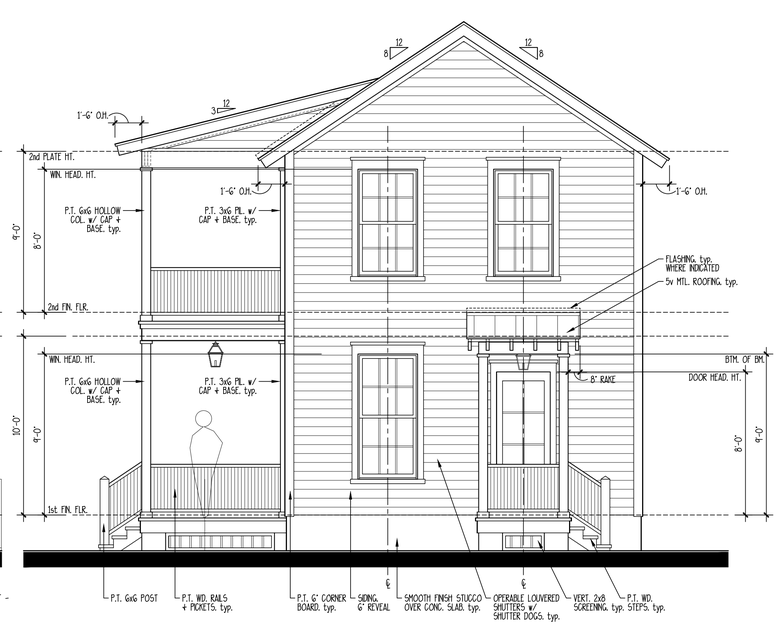

4 RIGHT ELEVATION

SCALE: 1/4" = 1'-0"

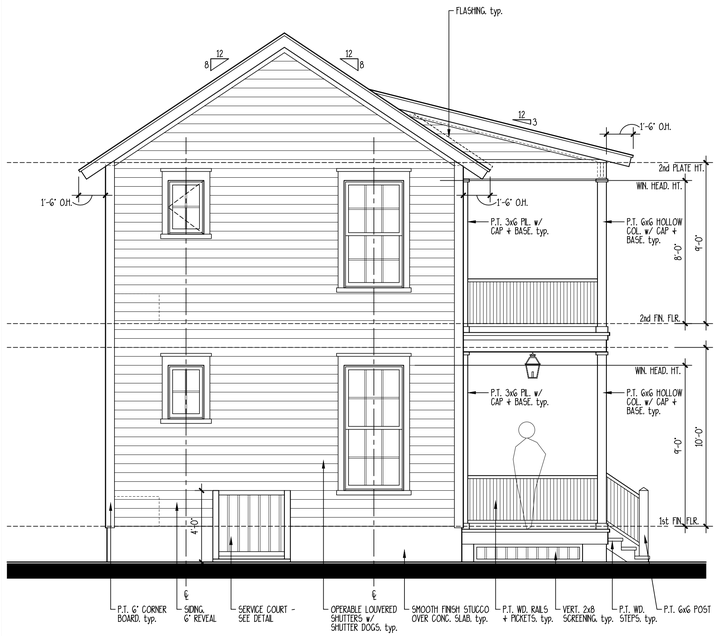

2 LEFT ELEVATION

SCALE: 1/4" = 1'-0"

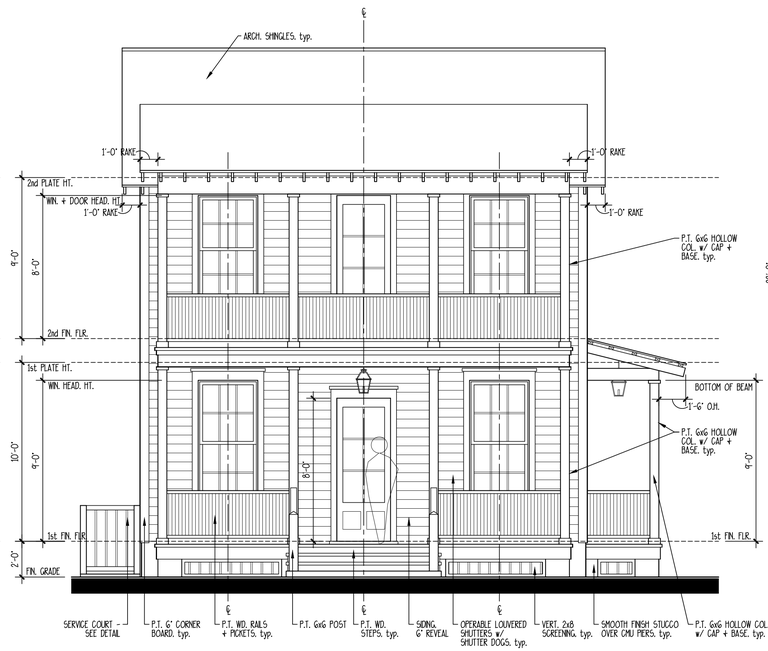

1 FRONT ELEVATION

SCALE: 1/4" = 1'-0"

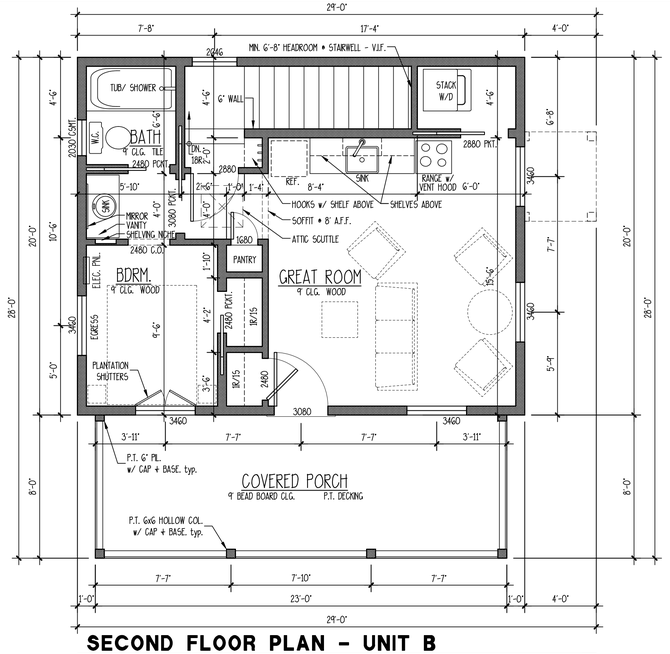

SECOND FLOOR PLAN - UNIT B

SCALE: 1/4" = 1'-0"

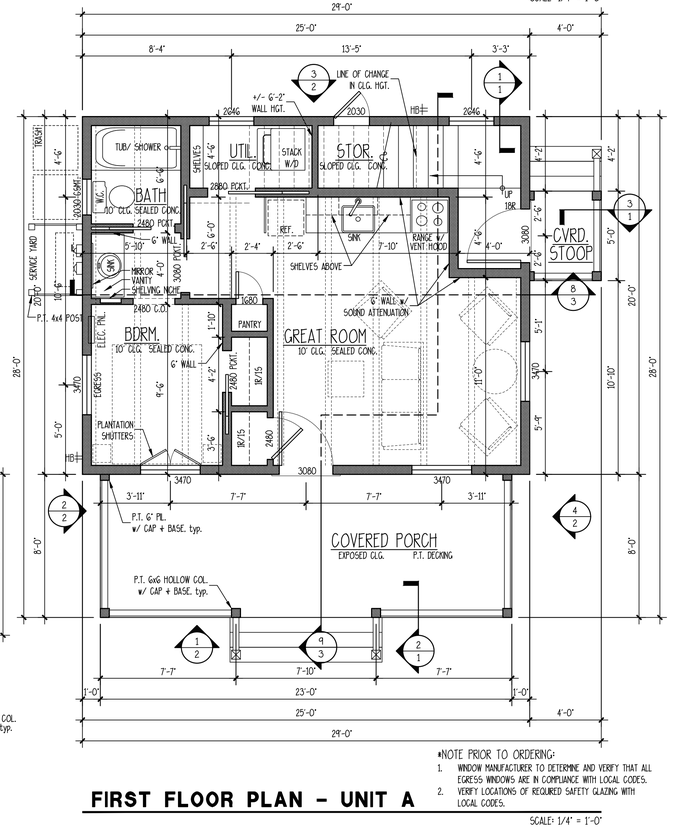

FIRST FLOOR PLAN - UNIT A

SCALE: 1/4" = 1'-0"

*NOTE PRIOR TO ORDERING:
1. WINDOW MANUFACTURER TO DETERMINE AND VERIFY THAT ALL EGRESS WINDOWS ARE IN COMPLIANCE WITH LOCAL CODES.
2. VERIFY LOCATIONS OF REQUIRED SAFETY GLAZING WITH LOCAL CODES.

WASHINGTON DUPLEX

ALLISON RAMSEY Architects, Inc. - creating sustainable timeless design
1003 Charles St.
Beaufort SC, 29902
(843) 986-0559
www.allisonramseyarchitect.com

THIS PLAN WAS DRAWN PURSUANT TO MEET OUR PROFESSIONAL STANDARDS AND PRACTICES. HOWEVER, BUILDING CODES AND ENVIRONMENTAL CONDITIONS VARY FOR DIFFERENT LOCATIONS. IT IS THE RESPONSIBILITY OF THE PURCHASER OF THIS PLAN TO ENSURE THE FOLLOWING AND TO CONSULT WITH LOCAL BUILDING OFFICIALS AND ENGINEERS AND ARCHITECTS AS NEEDED TO CORRECT FOR ANY ITEMS CONSTRUCTED FROM THIS PLAN.
•VERIFY COMPLIANCE WITH ALL LOCAL CODES
•VERIFY ALL DIMENSIONS PRIOR TO FABRICATING
•STAIRS, ROOF, LOCATIONS ONLY, ENGINEERING ASPECTS SHOULD BE CONSIDERED
•ALL ELECTRICAL, MECHANICAL, PLUMBING
•HVAC & PLUMBING LAYOUTS ARE NOT INCLUDED. THESE SHOULD BE OBTAINED FROM A LOCAL HVAC CONTRACTOR OR ENGINEER TO ENSURE COMPLIANCE WITH LOCAL CODE AND THAT EQUIPMENT IS SIZED CORRECTLY FOR YOUR PARTICULAR REGION AND CONDITIONS.
•NOTE ALL SECTIONAL DETAILS ARE GENERIC AND MAY NOT BE EXACT

DATE:	05/20/2018
JOB NO.	17P02
DWN. BY:	JWAS/ CP
DWG. NAME:	7.0JWG

Copyright 2018 by Allison Ramsey Architects, Inc. All rights reserved.

SYMBOLS + KEYS

DOOR AND WINDOW SIZE KEY
2860 = 2'-8" WIDE x 6'-0" HIGH

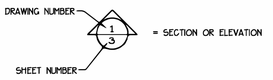



1 DRAWING TITLE
DETAIL OR ELEVATION NUMBER

14.00' = ELEVATION ABOVE SEA LEVEL
1 = REVISION NUMBER
= REVISION CLOUD
= PLAN REFERENCE NORTH
ARCH. 250

	SINGLE POLE SWITCH
3	THREE WAY SWITCH
4	FOUR WAY SWITCH
D	DIMMER SWITCH
SC	SPEED CONTROL
	DUPLEX OUTLET
H	1/2 HOT OUTLET
WP	WATER PROOF OUTLET
GF	GROUND FAULT OUTLET
	QUADRUPLEX OUTLET
	SPECIALTY OUTLET
	FLOOR OUTLET
	TELEPHONE JACK
T	THERMOSTAT
TV	TELEVISION JACK
V	VENT
V/L	VENT w/ LIGHT
	SURFACE MOUNTED FIXTURE
	RECESSED FIXTURE
	WALL MOUNTED FIXTURE
	FLOOD LIGHT
	FLUORESCENT FIXTURE
	CEILING FAN
	STRIP LIGHTING
	CEILING BOX
	DOOR CHIME
	ELECTRICAL PANEL
S	SMOKE DETECTOR
CO	CARBON MONOXIDE DETECTOR

COLORS + MATERIALS LIST - VERIFY w/ ARCHITECT	
STUCCO	DARK GRAY
FOUNDATION SCREENING	DARK GRAY
SIDING	WHITE
COLUMNS + TRIM	WHITE
TOP RAIL	DARK GRAY
WINDOWS	3 OVER 1; WHITE
DOORS	FIBERGLASS; 1/2 GLASS 6 LITE/OR SOLID; GRAY
ARCH. SHINGLES	DARK GRAY

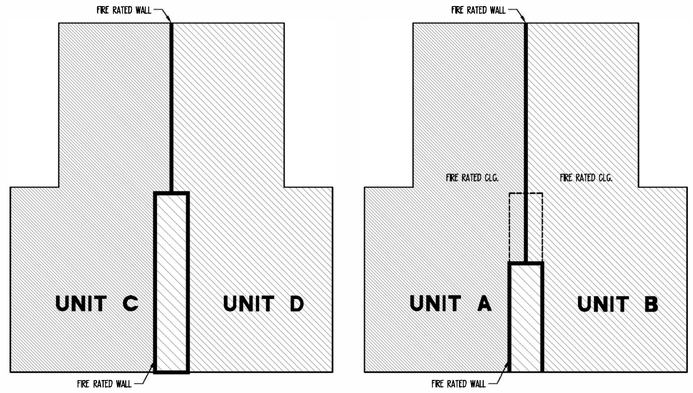

FIRE SEPARATION

*NOTE: 1ST FLOOR UNIT A + B FIRE SEPERATED FROM SEGOND STORY UNIT C + D BY 1 HR. FIRE RATED CLG.



CONCEPTUAL RENDERING

DRAWING INDEX

0	COVER SHEET
1	FOUNDATION/ ROOF PLANS/ DETAILS
2	FIRST + SECOND FLOOR PLANS
3	ELEVATIONS
4	WALL SECTIONS/ DETAILS
SP1	SPECIFICATIONS
SP2	SPECIFICATIONS
SP3	SPECIFICATIONS

GENERAL INFO.

AREA CALCULATIONS

UNIT 'A' HEATED = 580 S.F.
COVERED PORCH = 64 S.F.

UNIT 'B' HEATED = 580 S.F.
COVERED PORCH = 272 S.F.

UNIT 'C' HEATED = 580 S.F.
COVERED PORCH = 162 S.F.

UNIT 'D' HEATED = 580 S.F.
COVERED PORCH = 109 S.F.

23408 - MANSION FLATS 4-PLEX

MANSION FLATS 4-PLEX

ALLISON RAMSEY Architects, Inc. creating sustainable timeless design
1003 Charles St
Beaufort SC, 29902
(843) 986-0559
www.allisonramseyarchitect.com

THIS PLAN HAS BEEN PREPARED TO MEET TYP PROFESSIONAL STANDARDS AND PRACTICES. REMEMBER, BUILDING CODES AND ENVIRONMENTAL CONDITIONS VARY FOR DIFFERENT LOCATIONS. IT IS THE RESPONSIBILITY OF THE PURCHASER OF THIS PLAN TO ENSURE THE FOLLOWING: VERIFY ALL DIMENSIONS PRIOR TO PROCEEDING WITH CONSTRUCTION
VERIFY COMPLIANCE WITH ALL LOCAL CODES
PLANS INDICATE LOCATIONS ONLY; ENGINEERING ASPECTS SHOULD INCORPORATE ALL SITE SPECIFIC CONDITIONS
HVAC + PLUMBING LAYOUTS ARE NOT INCLUDED. THESE SHOULD BE OBTAINED FROM A LOCAL MECH. CONTRACTOR OR ENGINEER TO ENSURE COMPLIANCE WITH LOCAL CODE
ALL DIMENSIONS ARE NOMINAL. ACTUAL DIMENSIONS MAY VARY DUE TO FINISH MATERIALS
VERIFY ALL STRUCTURAL ELEMENTS WITH LOCAL ENGINEER AND/OR INSPECTORS

DATE:	06/25/2019
JOB NO.	18330.B
DWN. BY:	JWAS
DWG. NAME:	18330BLDWG

Copyright © 2019 by Allison Ramsey Architects, Inc. All rights reserved.

0

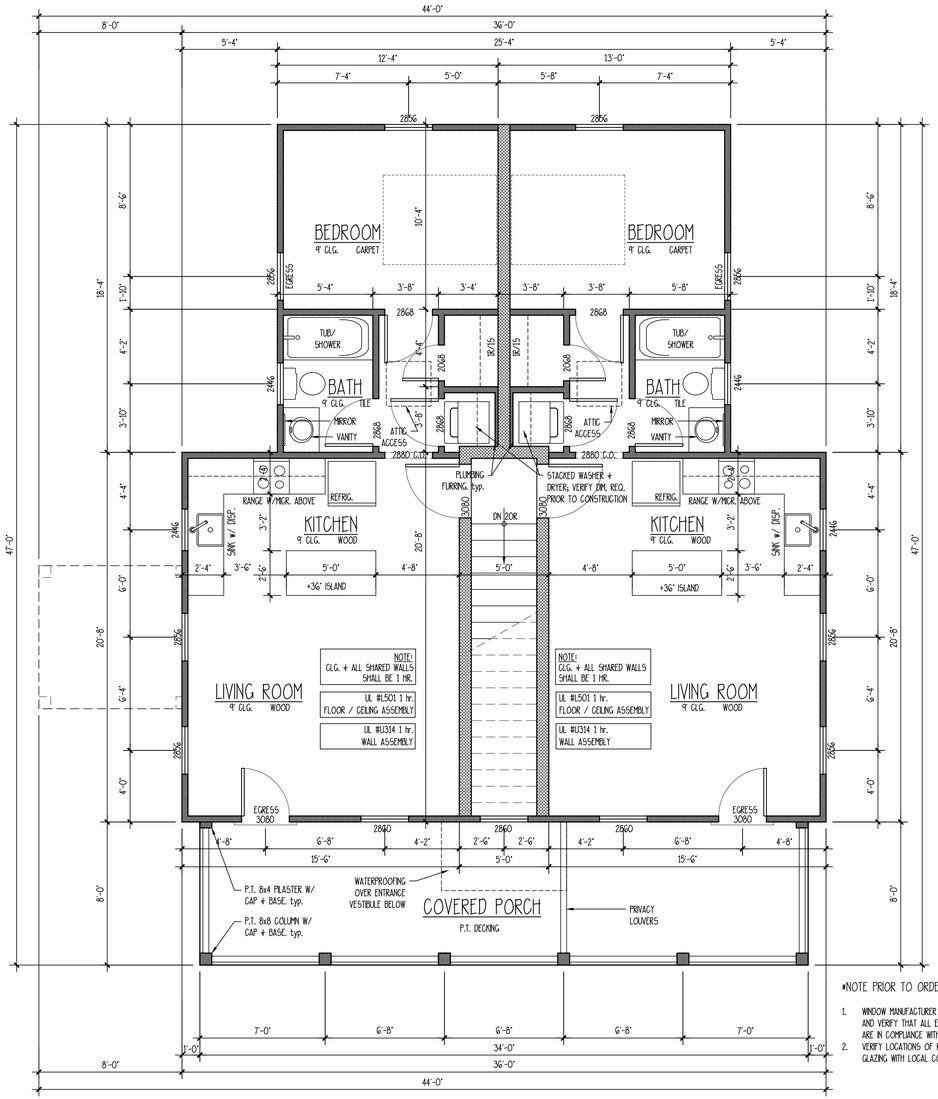

*NOTE PRIOR TO ORDERING:

1. WINDOW MANUFACTURER TO DETERMINE AND VERIFY THAT ALL EGRESS WINDOWS ARE IN COMPLIANCE WITH LOCAL CODES.
2. VERIFY LOCATIONS OF REQUIRED SAFETY GLAZING WITH LOCAL CODES.

SECOND FLOOR PLAN

SCALE: 1/4" = 1'-0"

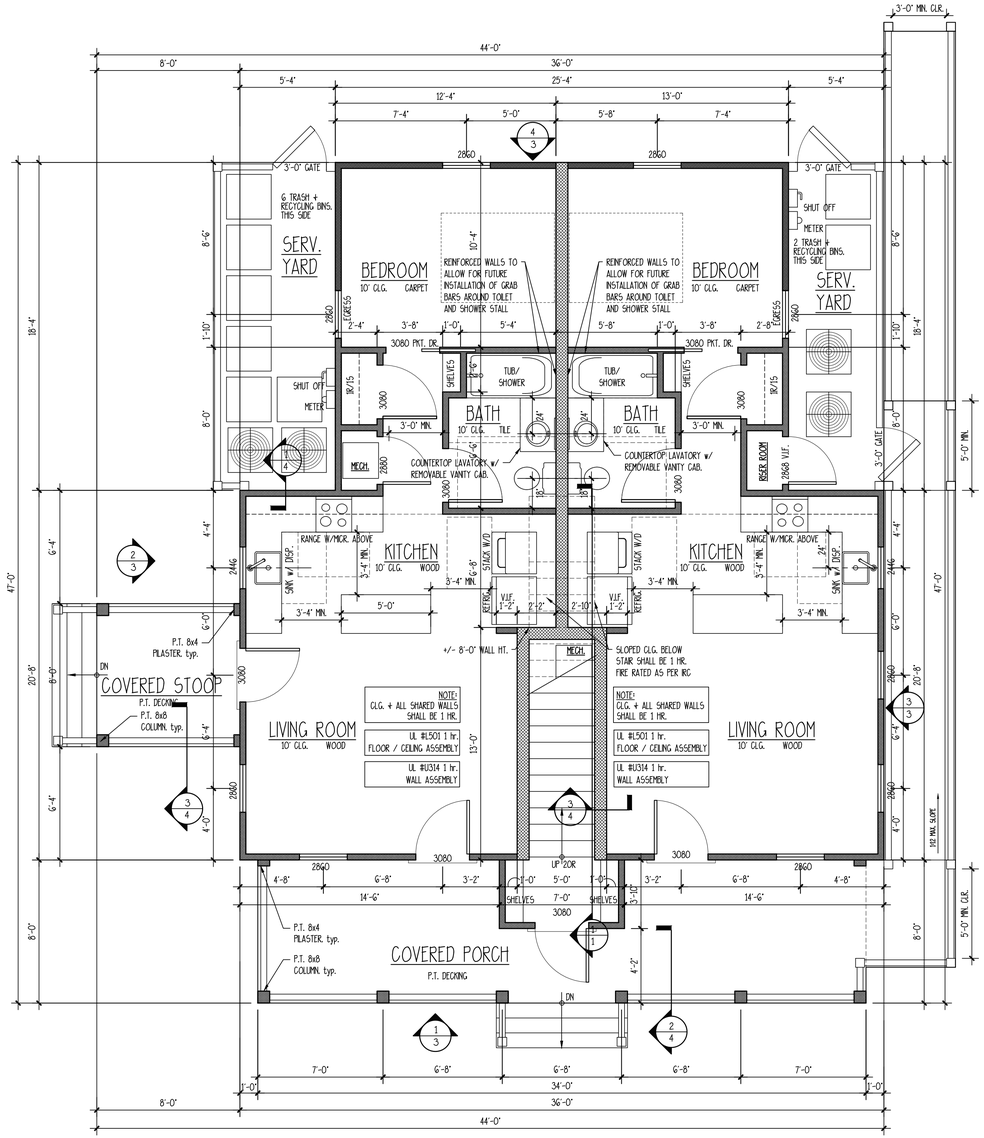

FIRST FLOOR PLAN

SCALE: 1/4" = 1'-0"

MANSION FLATS
4-PLEX

ALLISON RAMSEY Architects, inc. - creating sustainable timeless design
1003 Charles St.
Beaufort SC., 29902
(843) 986-0559
www.allisonramseyarchitect.com

THIS PLAN HAS BEEN PREPARED TO MEET TYP PROFESSIONAL STANDARDS AND PRACTICES. HOWEVER, BUILDING CODES AND ENVIRONMENTAL CONDITIONS VARY FOR DIFFERENT LOCATIONS. IT IS THE RESPONSIBILITY OF THE PURCHASER OF THIS PLAN TO VERIFY THE FOLLOWING: -VERIFY ALL DIMENSIONS PRIOR TO PROCEEDING WITH CONSTRUCTION -VERIFY COMPLIANCE WITH ALL LOCAL CODES -PLEASE INDICATE LOCATIONS ON ALL ENGINEERING ASPECTS SHOULD INCORPORATE -HVAC + PLUMBING LOCATIONS ARE NOT INCLUDED. THESE SHOULD BE DESIGNED PER A LOCAL TRADE CONTRACTOR OR ENGINEER TO ENSURE COMPLIANCE WITH LOCAL CODE -ALL ELECTRICAL LOCATIONS ARE SUGGESTED & SHOULD BE DESIGNED PER LOCAL CODES -VERIFY ALL STRUCTURAL ELEMENTS WITH LOCAL ENGINEER AND/OR ARCHITECT

DATE:	06/25/2019
JOB NO.	18330.B
DWN. BY:	JWJS
DWG. NAME:	18330BDWG

Copyright © 2019 by Allison Ramsey Architects, Inc. All rights reserved.

2

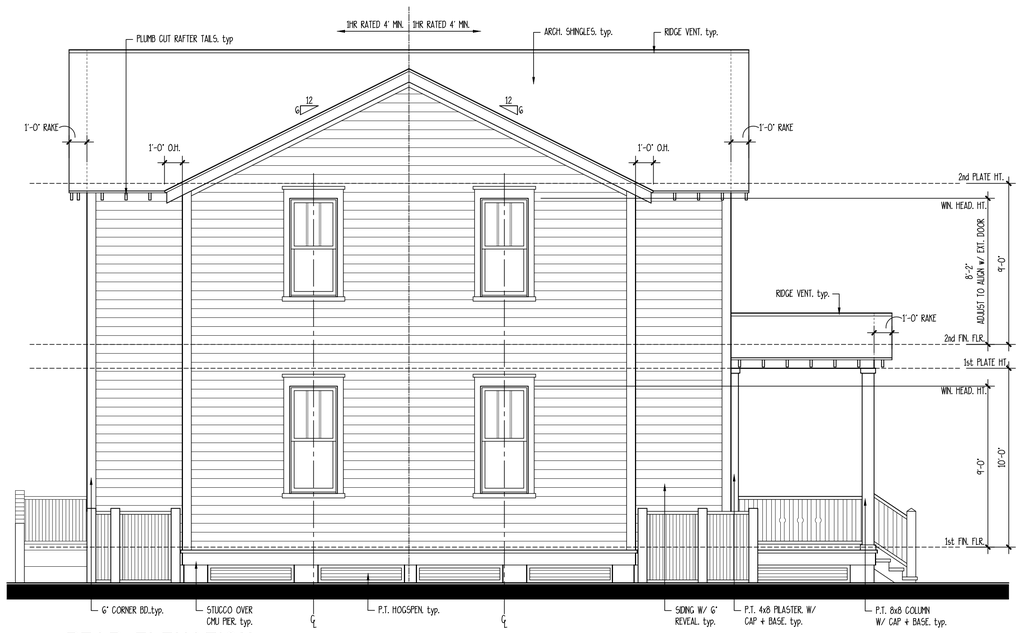

4 **REAR ELEVATION**

SCALE: 1/4" = 1'-0"

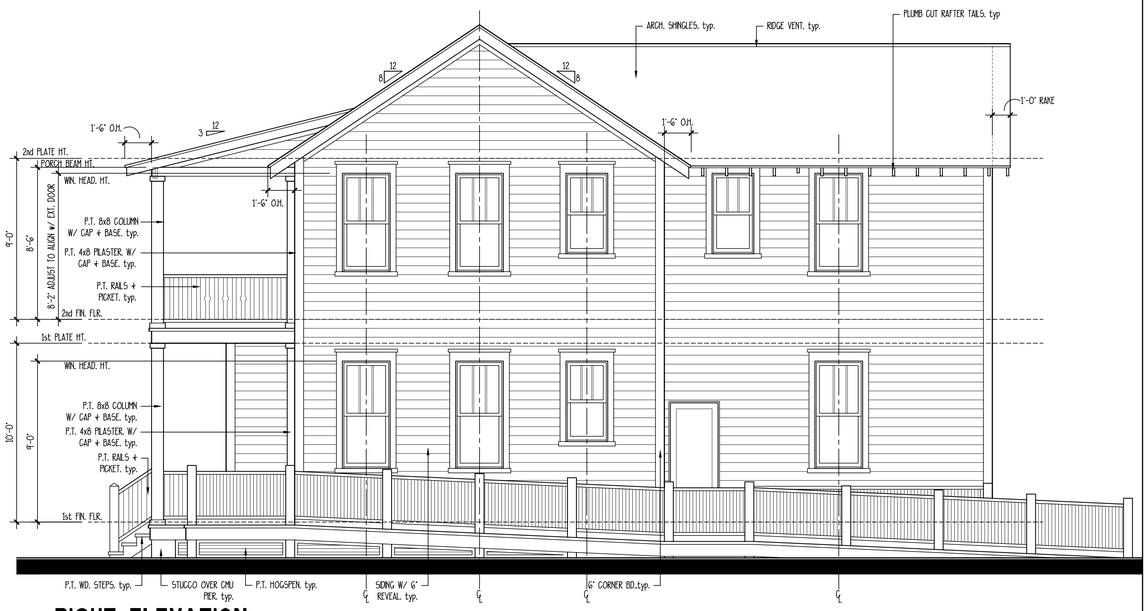

3 **RIGHT ELEVATION**

SCALE: 1/4" = 1'-0"



2 **LEFT ELEVATION**

SCALE: 1/4" = 1'-0"

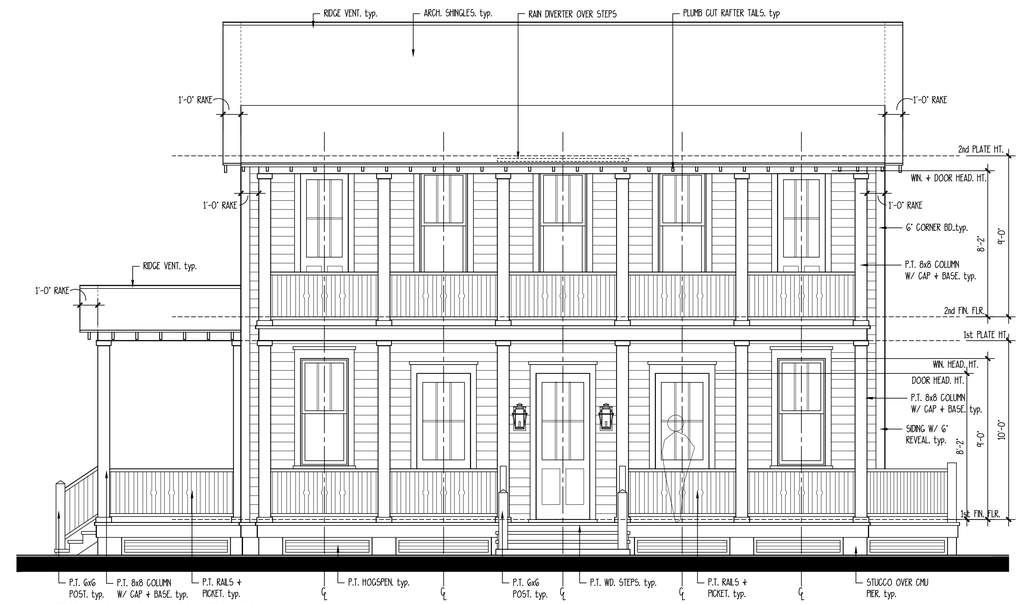

1 **FRONT ELEVATION**

SCALE: 1/4" = 1'-0"

MANSION FLATS
4-PLEX

ALLISON RAMSEY Architects, inc. creating sustainable timeless design
1003 Charles St.
Beaufort SC, 29902
(843) 986-0559
www.allisonramseyarchitect.com

THIS PLAN HAS BEEN PREPARED TO MEET CRP PROFESSIONAL STANDARDS AND PRACTICES. HOWEVER, BUILDING CODES AND ENVIRONMENTAL CONDITIONS VARY FOR DIFFERENT LOCATIONS. IT IS THE RESPONSIBILITY OF THE PURCHASER OF THIS PLAN TO ENSURE THE FOLLOWING ANY HOME CONSTRUCTED FROM THIS PLAN.

- VERIFY ALL DIMENSIONS PRIOR TO PROCEEDING WITH CONSTRUCTION
- VERIFY COMPLIANCE WITH ALL LOCAL CODES
- PLANS INDICATE LOCATIONS ONLY; FLASHING ASPECTS SHOULD INCORPORATE LOCAL PRACTICES
- HVAC + PLUMBING LAYOUTS ARE NOT INCLUDED. THESE SHOULD BE ORDERED FROM A LOCAL HVAC CONTRACTOR OR ENGINEER TO ENSURE COMPLIANCE WITH LOCAL CODE
- ELECTRICAL LAYOUTS ARE NOT INCLUDED. THESE SHOULD BE ORDERED FROM A LOCAL ELECTRICIAN TO ENSURE COMPLIANCE WITH LOCAL CODE
- VERIFY ALL SURVEYING ELEMENTS WITH LOCAL ENGINEER AND/OR ARCHITECT

DATE:	06/25/2019
JOB NO.	18330 B
DWN. BY:	JWAS
DWG. NAME:	18330B.DWG

Copyright © 2019 by Allison Ramsey Architects, Inc. All rights reserved.

3

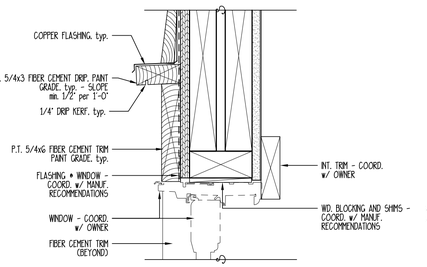

10 TYPICAL WINDOW & DOOR HEAD

SCALE: 3" = 1'-0"

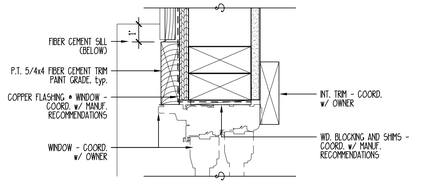

9 TYPICAL WINDOW & DOOR JAMB

SCALE: 3" = 1'-0"

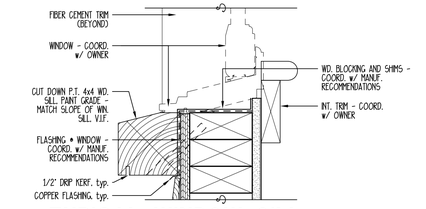

8 TYPICAL WINDOW SILL

SCALE: 3" = 1'-0"

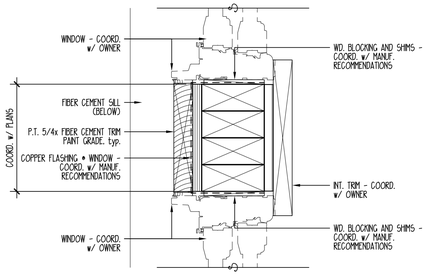

7 TYPICAL WINDOW JAMB @ MULL

SCALE: 3" = 1'-0"

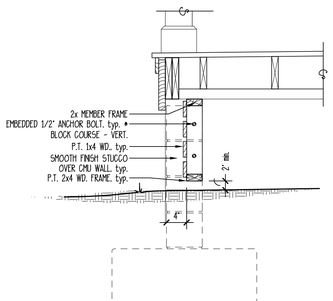

6 WD. HORIZ. HOGSPEN DETAIL

SCALE: 3/4" = 1'-0"

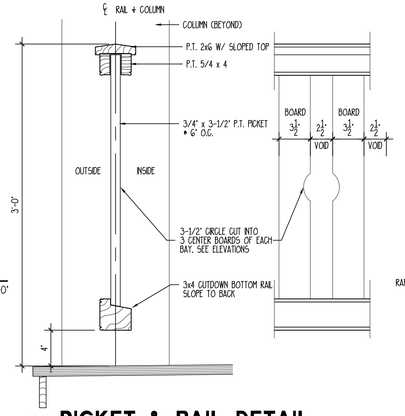

5 PICKET & RAIL DETAIL

SCALE: 1 1/2" = 1'-0"

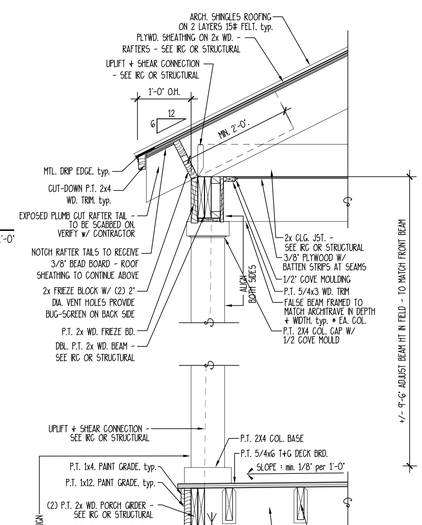

4 TYP. ONE STORY PORCH SECTION

SCALE: 3/4" = 1'-0"

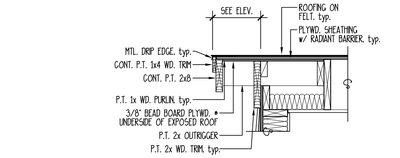

11 TYP. RAKE DETAIL

SCALE: 3/4" = 1'-0"

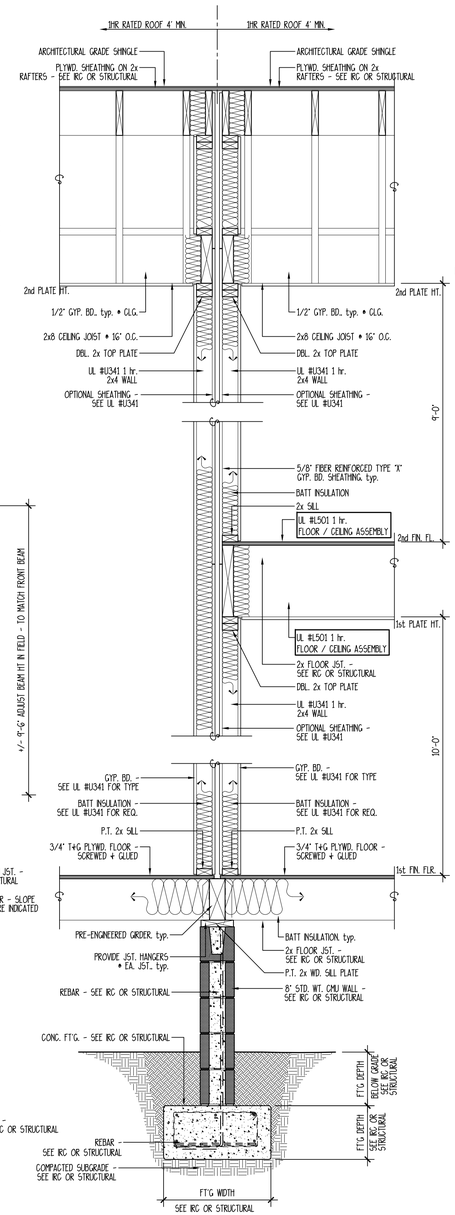

3 TYPICAL FIRE-WALL SECTION

SCALE: 3/4" = 1'-0"

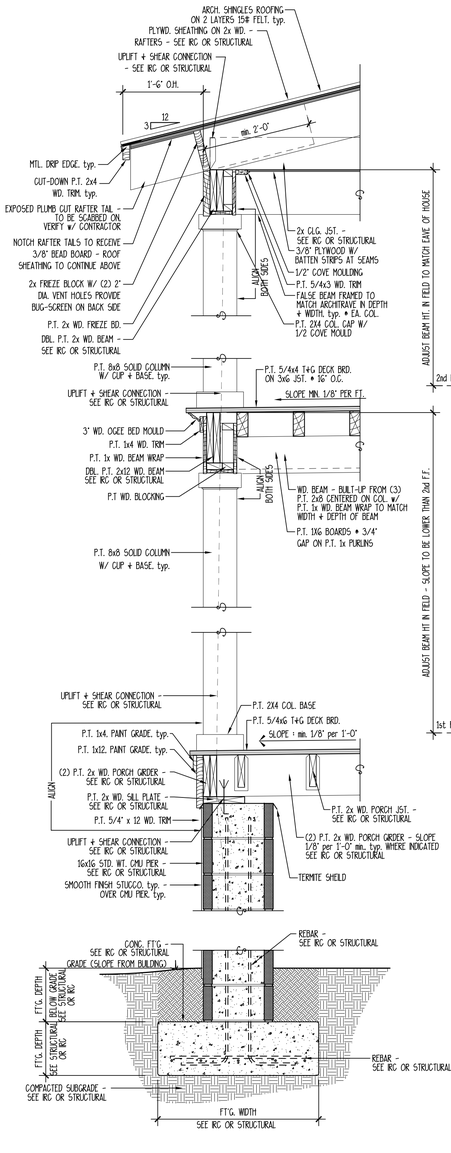

2 TYP. TWO STORE PORCH SECTION

SCALE: 3/4" = 1'-0"

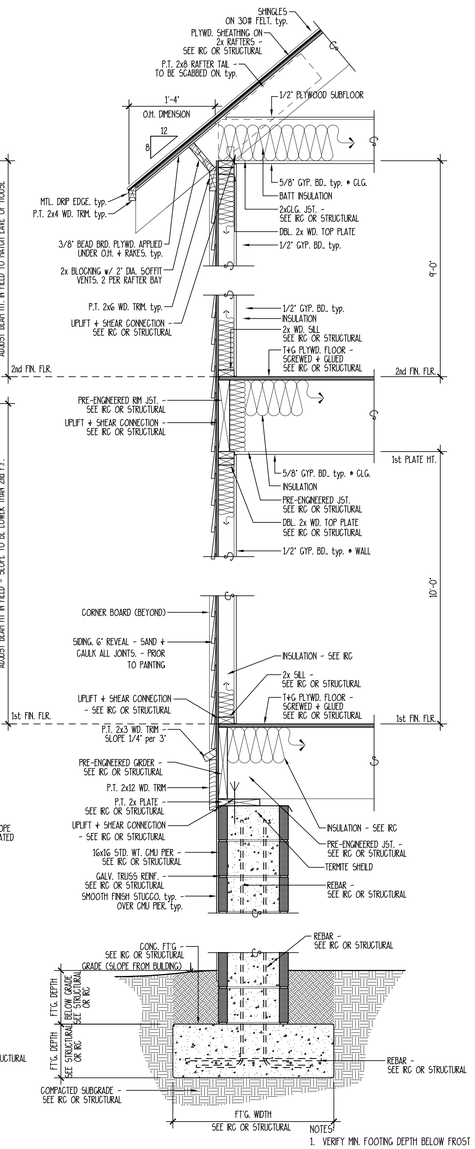

NOTES:
1. VERIFY MIN. FOOTING DEPTH BELOW FROST LINE WITH LOCAL BUILDING CODES
2. VERIFY HIGH WIND RESISTANCE REQUIREMENTS WITH LOCAL BUILDING INSPECTOR.

1 TYPICAL WALL SECTION

SCALE: 3/4" = 1'-0"

Copyright © 2019 by Allison Ramsey Architects, Inc. All rights reserved.

MANSION FLATS
4-PLEX

ALLISON RAMSEY Architects, Inc. creating sustainable timeless design
1003 Charles St.
Beaufort SC, 29902
(843) 986-0559
www.allisonramseyarchitect.com

THIS PLAN HAS BEEN PREPARED TO MEET TYP PROFESSIONAL STANDARDS AND PRACTICES. HOWEVER, BUILDING CODES AND ENVIRONMENTAL CONDITIONS VARY FOR DIFFERENT LOCATIONS. IT IS THE RESPONSIBILITY OF THE PURCHASER OF THIS PLAN TO PERFORM THE FOLLOWING BEFORE CONSTRUCTION BEGINS. ALLISON RAMSEY ARCHITECTS, INC. ASSUMES NO LIABILITY FOR ANY NOTE CONSTRUCTED FROM THIS PLAN.
•VERIFY COMPLIANCE WITH ALL LOCAL CODES
•FIELD VERIFY ALL DIMENSIONS PRIOR TO PROCEEDING WITH CONSTRUCTION
•VERIFY COMPLIANCE WITH ALL LOCAL CODES
•FIELD VERIFY LOCATIONS AND CONDITIONS
•PLANS & FLOORING LAYOUTS ARE NOT INCLUDED. THESE SHOULD BE OBTAINED FROM A LOCAL FLOOR CONTRACTOR OR ENGINEER TO ENSURE COMPLIANCE WITH LOCAL CODE
•ALL MECHANICAL, ELECTRICAL, PLUMBING, & STRUCTURAL SYSTEMS MUST BE FIELD VERIFIED FOR CONDITIONS.
•VERIFY ALL STRUCTURAL ELEMENTS WITH LOCAL ENGINEER AND/OR ARCHITECT

DATE:	06/25/2019
JOB NO.	18330 B
DWN. BY:	JWAS
DWG. NAME:	18330BDWG

MANSION FLATS 4-PLEX

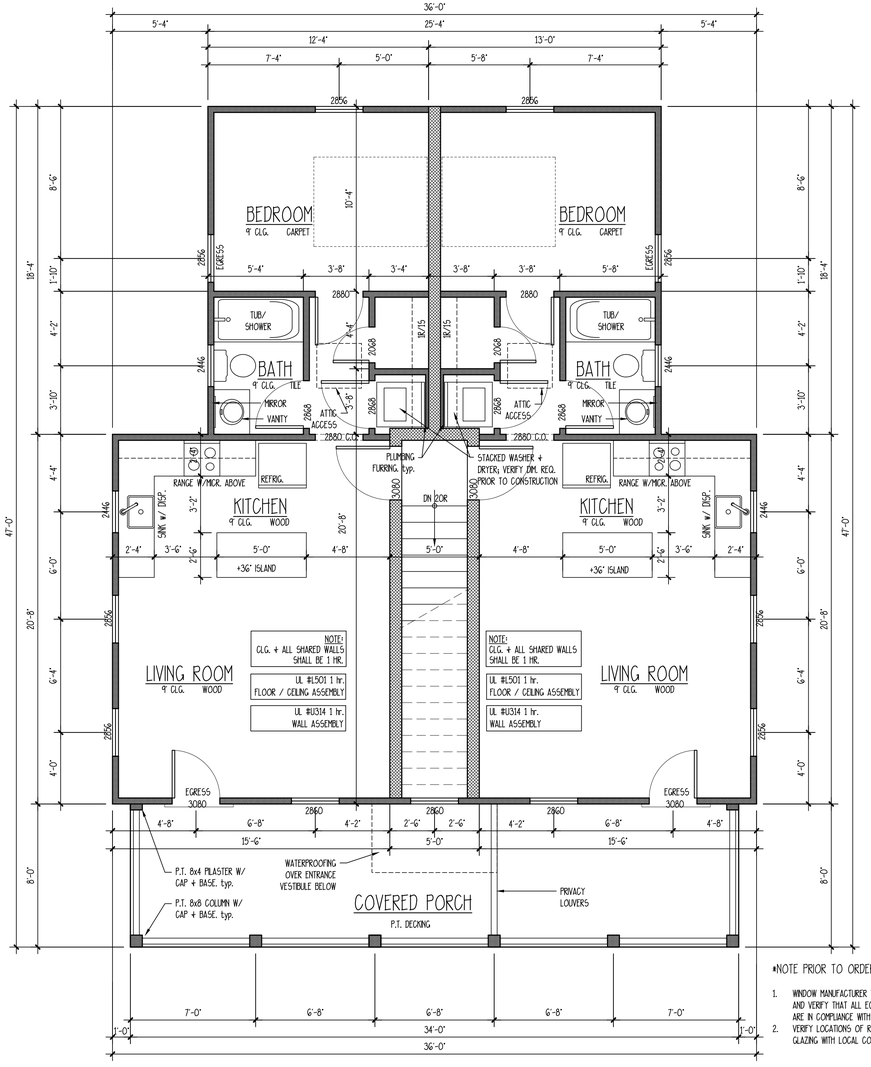

*NOTE PRIOR TO ORDERING:

1. WINDOW MANUFACTURER TO DETERMINE AND VERIFY THAT ALL EGRESS WINDOWS ARE IN COMPLIANCE WITH LOCAL CODES.
2. VERIFY LOCATIONS OF REQUIRED SAFETY GLAZING WITH LOCAL CODES.

SECOND FLOOR PLAN

SCALE: 1/4" = 1'-0"

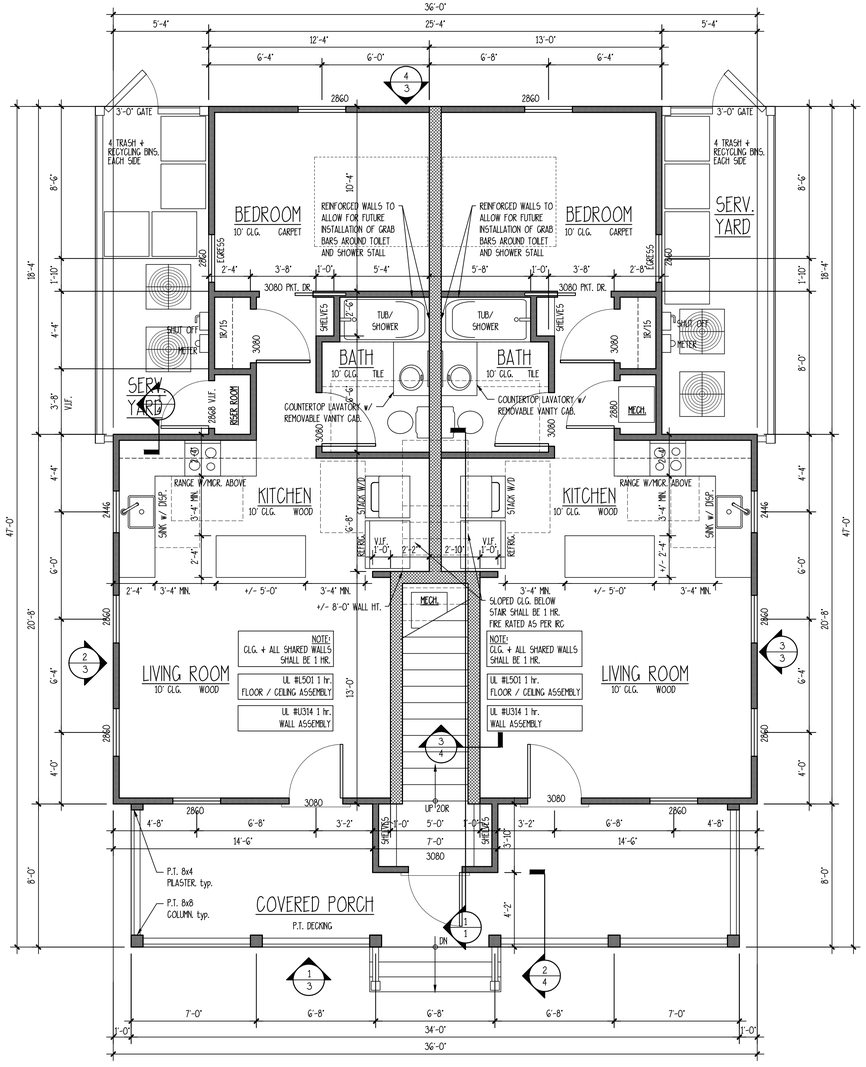

FIRST FLOOR PLAN

SCALE: 1/4" = 1'-0"

ALLISON RAMSEY Architects, LLC
creating sustainable timeless design
1103 Charles St.
Beaufort SC, 29902
(843) 986-0559
www.allisonramseyarchitect.com

THIS PLAN HAS BEEN PREPARED TO MEET TYP PROFESSIONAL STANDARDS AND PRACTICES. HOWEVER, BUILDING CODES AND ENVIRONMENTAL CONDITIONS VARY FOR DIFFERENT LOCATIONS. IT IS THE RESPONSIBILITY OF THE OWNER/AGENT OF THIS PLAN TO PERFORM THE FOLLOWING BEFORE BEGINNING CONSTRUCTION. ALLISON RAMSEY ARCHITECTS, INC. ASSUMES NO LIABILITY FOR ANY HOME CONSTRUCTED FROM THIS PLAN.

-VERIFY ALL DIMENSIONS PRIOR TO PROCEEDING WITH CONSTRUCTION
-VERIFY COMPLIANCE WITH ALL LOCAL CODES
-PLANS REQUIRE LOCATIONS (MFR'S) ENGINEERING ASPECTS SHOULD INCORPORATE ACC. LOCATIONS
-HVAC + PLUMBING LAYOUTS ARE NOT INCLUDED. THESE SHOULD BE OBTAINED FROM A LOCAL MECH. CONTRACTOR OR ENGINEER TO ENSURE COMPLIANCE WITH LOCAL CODE
-VERIFY ALL STRUCTURAL ELEMENTS WITH LOCAL ENGINEER AND/OR ARCHITECT

DATE:	06/25/2019
JOB NO.	1833OA
DWN. BY:	JWAS
DWG. NAME:	1833OA.DWG

Copyright © 2019 by Allison Ramsey Architects, Inc. All rights reserved.

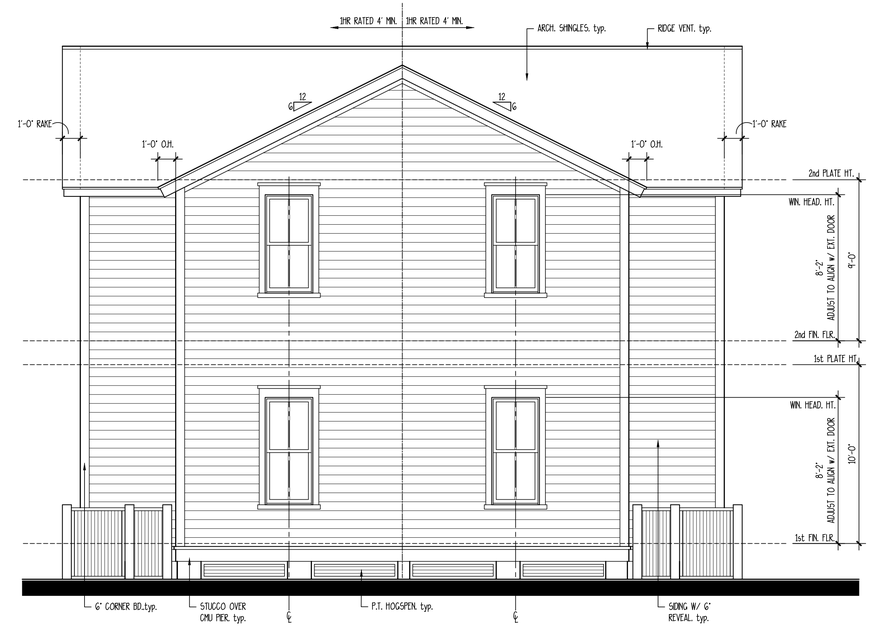

4 REAR ELEVATION

SCALE: 1/4" = 1'-0"



3 RIGHT ELEVATION

SCALE: 1/4" = 1'-0"



2 LEFT ELEVATION

SCALE: 1/4" = 1'-0"

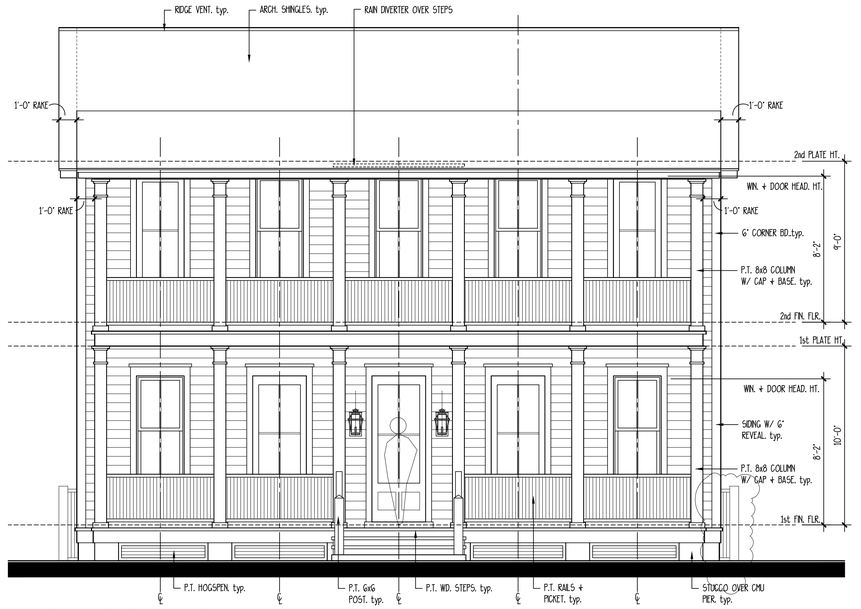

1 FRONT ELEVATION

SCALE: 1/4" = 1'-0"

MANSION FLATS 4-PLEX

ALLISON RAMSEY Architects, Inc. creating sustainable timeless design
1003 Charles St.
Beaufort SC. 29902
(843) 986-0559
www.allisonramseyarchitect.com

THIS PLAN HAS BEEN PREPARED TO MEET TOP PROFESSIONAL STANDARDS AND PRACTICES. HOWEVER, BUILDING CODES AND ENVIRONMENTAL CONDITIONS VARY FOR DIFFERENT LOCATIONS. IT IS THE RESPONSIBILITY OF THE PURCHASER OF THIS PLAN TO OBTAIN THE FOLLOWING BEFORE CONSTRUCTION BEGINS. ALLISON RAMSEY ARCHITECTS, INC. FAILURES TO OBTAIN ITEM ANY HOME CONSTRUCTED FROM THIS PLAN.

-VERIFY ALL DIMENSIONS PRIOR TO RECEIVING ANY CONSTRUCTION
-VERIFY COMPLIANCE WITH ALL LOCAL CODES
-PLANS INDICATE LOCATIONS ONLY, FLASHING ASPECTS SHOULD INCORPORATE ELECTRICAL, MECHANICAL AND PLUMBING DESIGNS.
-HVAC + PLUMBING LAYOUTS ARE NOT INCLUDED. THESE SHOULD BE OBTAINED FROM A LOCAL MECH. CONTRACTOR OR ENGINEER TO ENSURE COMPLIANCE WITH LOCAL CODE
-VERIFY ALL STRUCTURAL COMPONENTS WITH A LICENSED ENGINEER IN YOUR AREA.
-VERIFY ALL SIDING/ROOFING MATERIALS WITH LOCAL CONTRACTORS AND/OR MANUFACTURERS.

DATE:	06/25/2019
JOB NO.	18330A
DWN. BY:	JAMS
DWG. NAME:	18330A.DWG

Copyright © 2019 by Allison Ramsey Architects, Inc. All rights reserved.

3

SYMBOLS + KEYS

DOOR AND WINDOW SIZE KEY
2860 = 2'-8" WIDE x 6'-0" HIGH

DRAWING NUMBER — 1 / 3 = SECTION OR ELEVATION — SHEET NUMBER

ROOM TITLE
KITCHEN
10' CLG. WOOD
CEILING HEIGHT — FLOOR FINISH

1 **DRAWING TITLE**
DETAIL OR ELEVATION NUMBER

14.00' = ELEVATION ABOVE SEA LEVEL
1 = REVISION NUMBER
= REVISION CLOUD
REF. IN = PLAN REFERENCE NORTH

	SINGLE POLE SWITCH
	THREE WAY SWITCH
	FOUR WAY SWITCH
	DIMMER SWITCH
	SPEED CONTROL
	DUPLEX OUTLET
	1/2 HOT OUTLET
WP	WATER PROOF OUTLET
GF	GROUND FAULT OUTLET
	QUADRUPLEX OUTLET
	SPECIALTY OUTLET
	FLOOR OUTLET
	TELEPHONE JACK
T	THERMOSTAT
	TELEVISION JACK
V	VENT
V/L	VENT w/ LIGHT
	SURFACE MOUNTED FIXTURE
	RECESSED FIXTURE
	WALL MOUNTED FIXTURE
	FLOOD LIGHT
	LED FIXTURE
	CEILING FAN
	STRIP LIGHTING
J	CEILING BOX
B	DOOR CHIME
	ELECTRICAL PANEL
S	SMOKE DETECTOR
CO	CARBON MONOXIDE DETECTOR



CONCEPTUAL RENDERING

DRAWING INDEX

0	COVER SHEET
S	SITE PLAN
1	FOUNDATION PLAN
2	FIRST FLOOR PLAN
3	SECOND FLOOR PLAN
4	ELEVATIONS
5	ELEVATIONS
6	WALL SECTIONS/ DETAILS/ ROOF PLAN
7	FIRST FLOOR ELECTRICAL LAYOUT
8	SECOND FLOOR ELECTRICAL LAYOUT
SP1	SPECIFICATIONS
SP2	SPECIFICATIONS
SP3	SPECIFICATIONS

GENERAL INFO.

AREA CALCULATIONS

FIRST FLOOR HEATED = XXXX S.F.
SECOND FLOOR HEATED = XXXX S.F.
TOTAL HEATED = XXXX S.F.
GARAGE AND STORAGE = XXXX S.F.
SCREENED PORCH = XXXX S.F.
COVERED PORCH = XXXX S.F.

23408 - HARRINGTON DUPLEX

HARRINGTON DUPLEX

ALLISON RAMSEY Architects Inc. creating sustainable timeless design
1003 Charles St.
Beaufort SC, 29902
(843) 986-0559
www.allisonramseyarchitect.com

THIS PLAN HAS BEEN PREPARED TO MEET TOP PROFESSIONAL STANDARDS AND PRACTICES. HOWEVER, BUILDING CODES AND ENVIRONMENTAL CONDITIONS VARY FOR DIFFERENT LOCATIONS. IT IS THE RESPONSIBILITY OF THE PURCHASER OF THIS PLAN TO PERFORM THE FOLLOWING BEFORE BEGINNING CONSTRUCTION. ALLISON RAMSEY ARCHITECTS, INC. ASSUMES NO LIABILITY FOR ANY PLAN CONSTRUCTED FROM THIS PLAN.

- VERIFY ALL DIMENSIONS PRIOR TO PROCEEDING WITH CONSTRUCTION
- VERIFY COMPLIANCE WITH ALL LOCAL CODES
- PLANS INDICATE LOCATIONS ONLY. ENGINEERING ASPECTS SHOULD INCORPORATE ACTUAL SITE CONDITIONS.
- HVAC + PLUMBING LAYOUTS ARE NOT INCLUDED. THESE SHOULD BE OBTAINED FROM A LOCAL MEDIA CONTRACTOR OR ENGINEER TO ENSURE COMPLIANCE WITH LOCAL CODE AND THAT EQUIPMENT IS SIZED CORRECTLY FOR YOUR PARTICULAR PLAN AND CONDITIONS.
- VERIFY ALL STRUCTURAL ELEMENTS WITH LOCAL ENGINEER AND/OR ARCHITECT.

Copyright 2023 by Allison Ramsey Architects, Inc. All rights reserved.

DATE: 10/27/2023
JOB NO. XXXXX
DWN. BY: XX
DWG. NAME: XXXXX.DWG

0

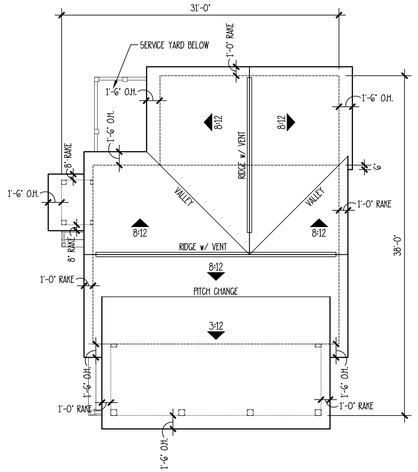

*NOTE:

1. ALL PENETRATIONS TO BE LOCATED AS INCONSPICUOUSLY AS POSSIBLE. * REAR OR SIDES OF HOUSE AS POSSIBLE.
2. ROOF PENETRATIONS NEED TO BE KEPT TO A MINIMUM. (COMBINED WHEN POSSIBLE).
3. ALL ROOF / WALL PENETRATIONS TO BE PAINTED TO MATCH ROOF COLOR.
4. TWO (2) LAYERS UNDERLAYMENT REQUIRED WHEN 4:12 ROOF PITCH OR LOWER.
5. METAL ROOF SEAMS NOT TO EXCEED 16' O.C.
6. METAL ROOF SEAMS TO BE 1 1/2" TO 1 3/4" IN HEIGHT

ROOF PLAN

SCALE: 1/8" = 1'-0"

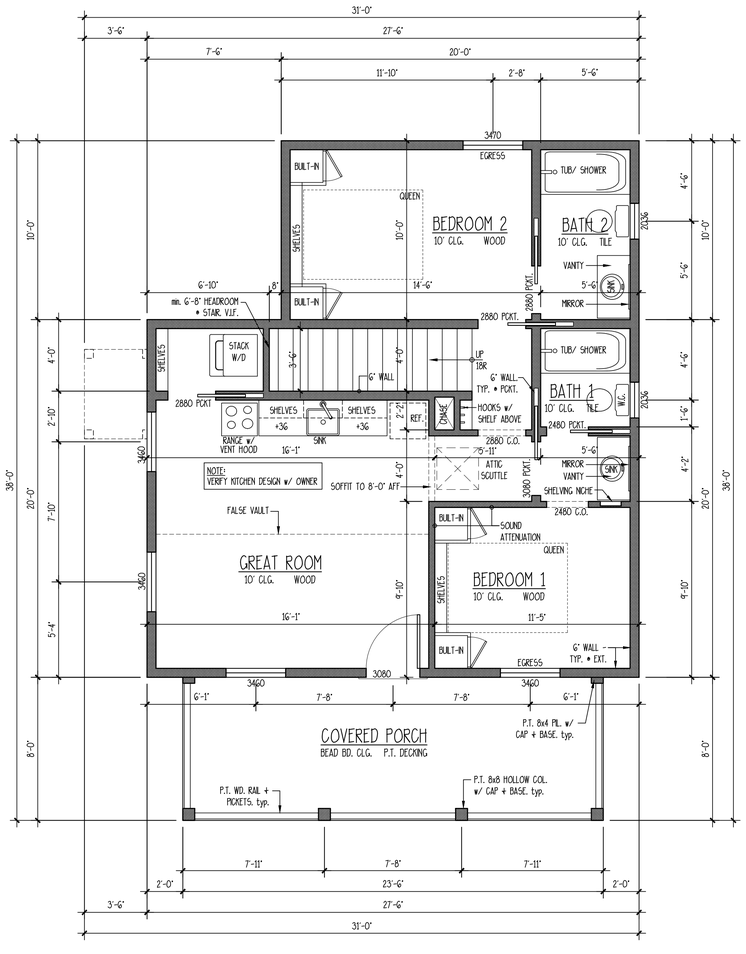

SECOND FLOOR PLAN - UNIT B

SCALE: 1/4" = 1'-0"

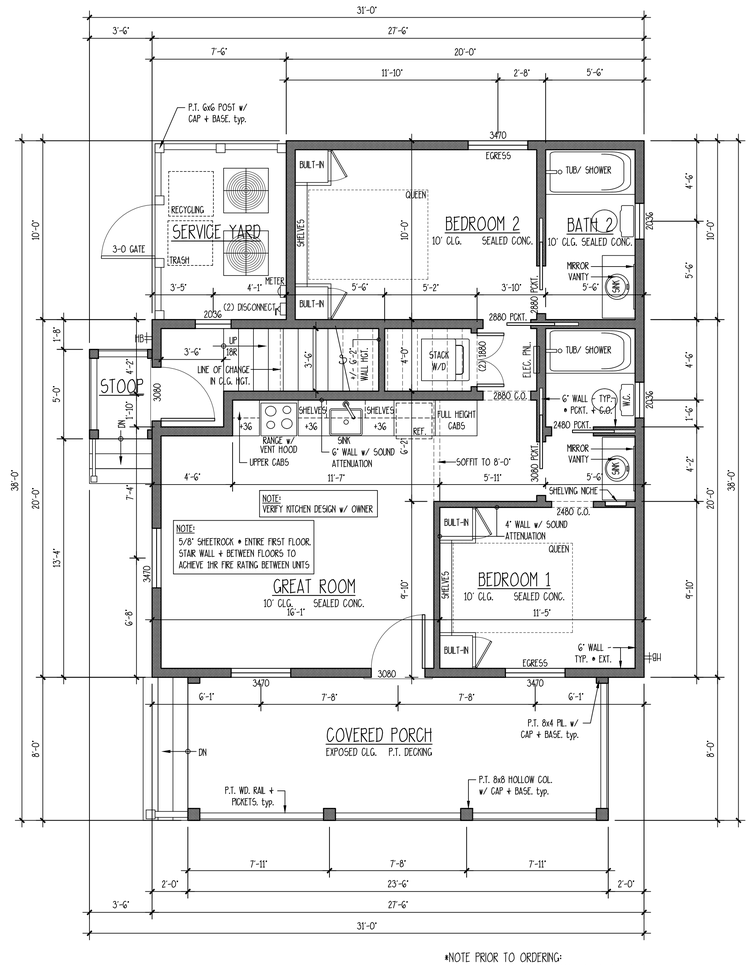

*NOTE PRIOR TO ORDERING:

1. WINDOW MANUFACTURER TO DETERMINE AND VERIFY THAT ALL EGRESS WINDOWS ARE IN COMPLIANCE WITH LOCAL CODES.
2. VERIFY LOCATIONS OF REQUIRED SAFETY GLAZING WITH LOCAL CODES.

FIRST FLOOR PLAN - UNIT A

SCALE: 1/4" = 1'-0"

HARRINGTON DUPLEX

ALLISON RAMSEY Architects, Inc. - creating sustainable timeless design
1003 Charles St.
Beaufort SC, 29902
(843) 986-0559
www.allisonramseyarchitect.com

THIS PLAN HAS BEEN PREPARED TO MEET 10F PROFESSIONAL STANDARDS AND PRACTICES. HOWEVER, BUILDING CODES AND ENVIRONMENTAL CONDITIONS VARY FOR DIFFERENT LOCATIONS. IT IS THE RESPONSIBILITY OF THE CONTRACTOR OF THIS PLAN TO ENFORCE THE FOLLOWING:
-VERIFY ALL DIMENSIONS PRIOR TO FABRICATION OR CONSTRUCTION. ALLISON RAMSEY ARCHITECTS, INC. ASSUMES NO RESPONSIBILITY FOR ANY NOTE CONSTRUCTED FROM THIS PLAN.
-VERIFY COMPLIANCE WITH ALL LOCAL CODES
-STAIRS, ROOFLET LOCATIONS, CRIL CHANGEMENTS, ASPECTS SHOULD INCORPORATE LOCAL BUILDING CODES.
-HVAC + PLUMBING LOCATIONS ARE NOT INCLUDED. THESE SHOULD BE OBTAINED FROM A LOCAL MECH. CONTRACTOR OR ENGINEER TO ENSURE COMPLIANCE WITH LOCAL CODE AND THEY EQUIPMENT SIZES CORRECTLY. TOUR CONTRACTOR REVIEW AND CONFIRM ADEQUATE SIZES FOR EQUIPMENT WITH LOCAL CODES AND MANUFACTURERS.

DATE:	06/22/2023
JOB NO.	XXXXX
DWN. BY:	XX
DWG. NAME:	XXXXX.DWG

Copyright 2023 by Allison Ramsey Architects, Inc. All rights reserved.

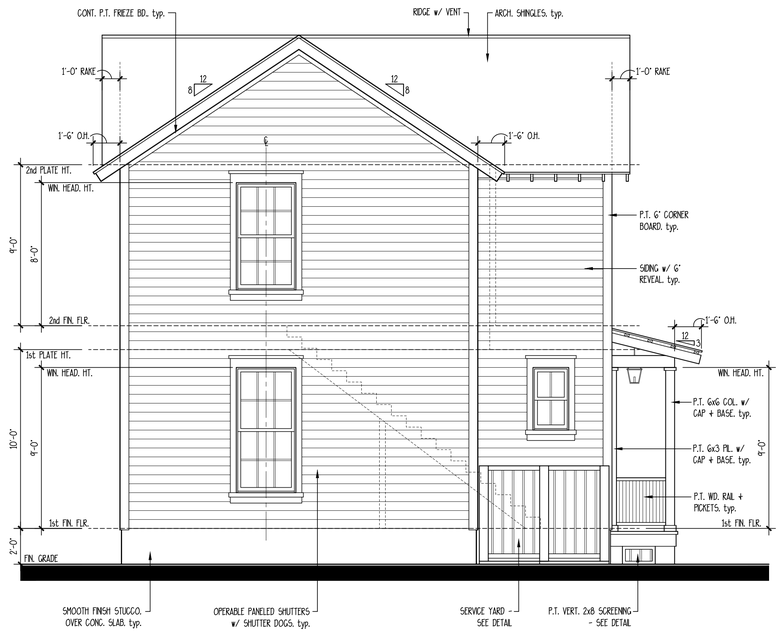

3 REAR ELEVATION

SCALE: 1/4" = 1'-0"

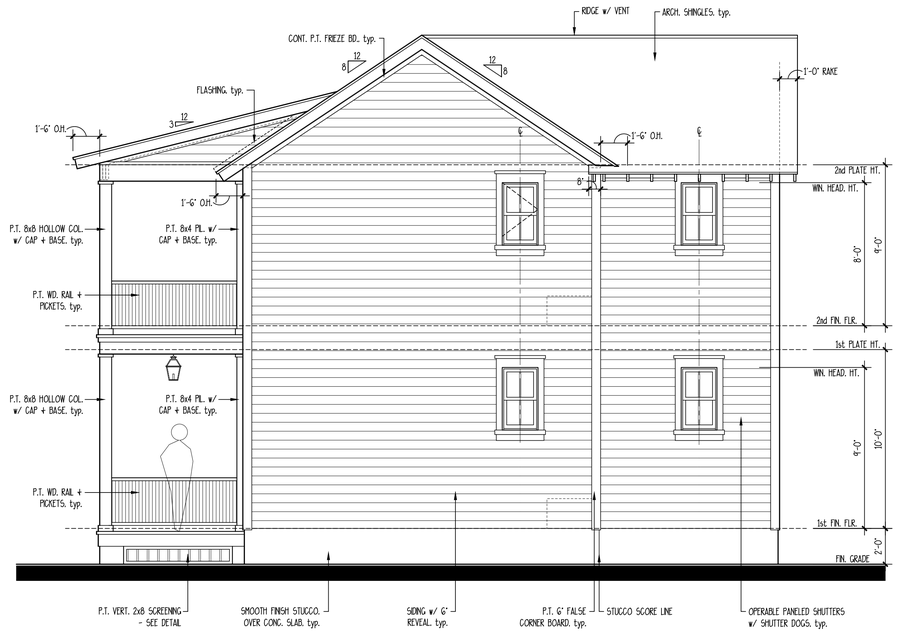

4 RIGHT ELEVATION

SCALE: 1/4" = 1'-0"

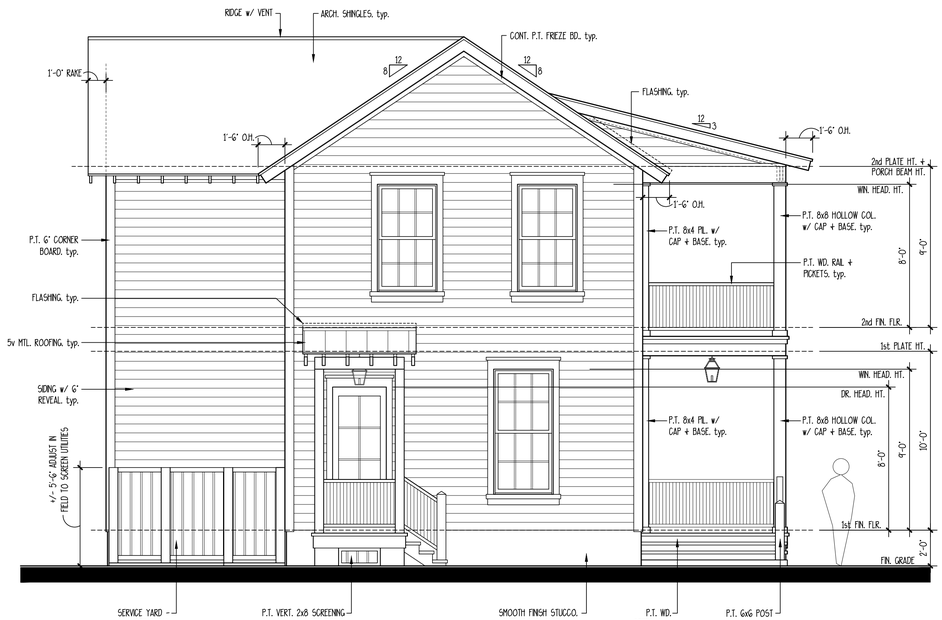

2 LEFT ELEVATION

SCALE: 1/4" = 1'-0"

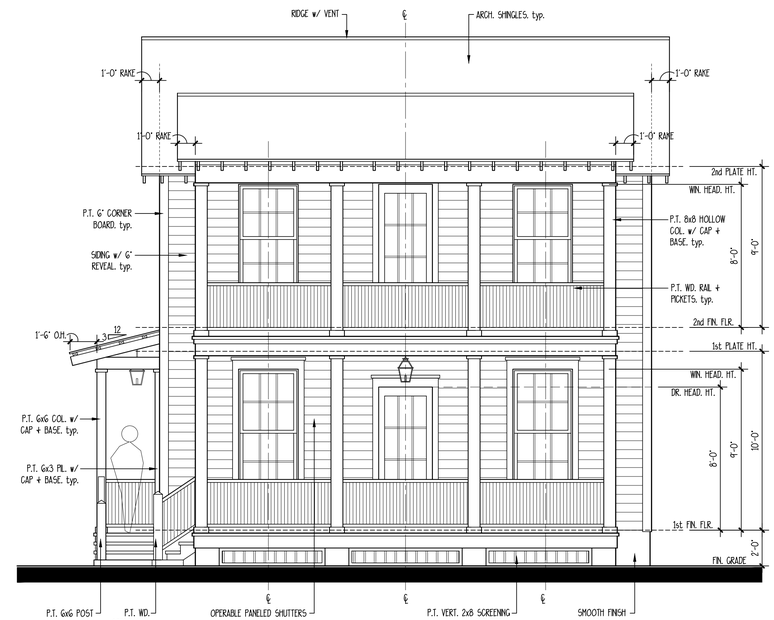

1 FRONT ELEVATION

SCALE: 1/4" = 1'-0"

HARRINGTON DUPLEX

ALLISON RAMSEY Architects, inc. creating sustainable timeless design
1003 Charles St.
Beaufort SC, 29902
(843) 986-0559
www.allisonramseyarchitect.com

THIS PLAN HAS BEEN PREPARED TO MEET TYPICAL PROFESSIONAL STANDARDS AND PRACTICES. HOWEVER, BUILDING CODES AND ENVIRONMENTAL CONDITIONS VARY FOR DIFFERENT LOCATIONS. IT IS THE RESPONSIBILITY OF THE ENGINEER OF THIS PLAN TO STRESSING THE FOLLOWING. BY REVIEWING AND CONSTRUCTING FROM THIS PLAN, CONTRACTOR AGREES ALL DESIGNERS TO CONSULT FOR ANY HOME CONSTRUCTED FROM THIS PLAN.

- VERIFY COMPLIANCE WITH ALL LOCAL CODES
- PLANS INDICATE LOCATIONS ONLY; ENGINEERING EXPERTS SHOULD INCORPORATE ALL ELECTRICAL COMPONENTS
- STAIRS & FLOORING LAYOUTS ARE NOT INCLUDED. THESE SHOULD BE DESIGNED PRIOR TO LOCAL PERMIT CONSTRUCTION OR ENGINEER TO ENSURE COMPLIANCE WITH LOCAL CODE
- ANY PRINTED COPIES TO BEAR ARCHITECT'S SEAL FOR PERMISSION REVIEW AND CONFORMS WITH ALL STRUCTURAL LOADING & DETAILS, CODES AND APPROVALS.

DATE:	06/22/2023
JOB NO.	XXXX
DWN. BY:	XX
DWG. NAME:	XXXXJPWG

Copyright 2023 by Allison Ramsey Architects, Inc. All rights reserved.

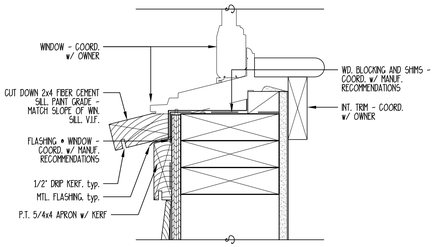

6 TYPICAL WINDOW SILL

SCALE: 3" = 1'-0"

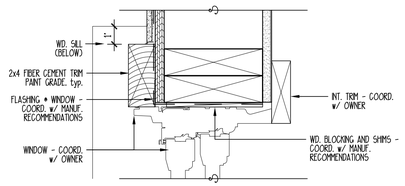

7 TYPICAL WINDOW & DOOR JAMB

SCALE: 3" = 1'-0"

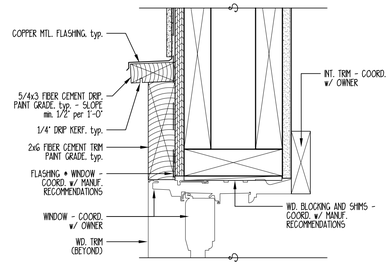

8 TYPICAL WINDOW & DOOR HEAD

SCALE: 3" = 1'-0"

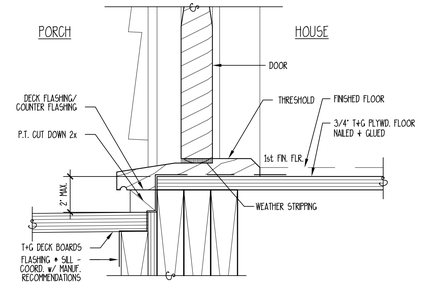

9 TYPICAL EXTERIOR DOOR SILL

SCALE: 3" = 1'-0"

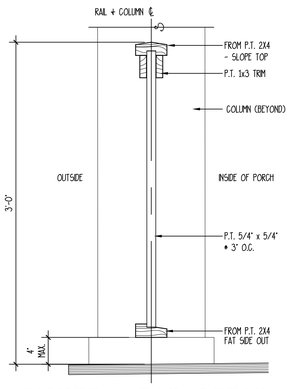

5 PICKET & RAIL DETAIL

SCALE: 1 1/2" = 1'-0"

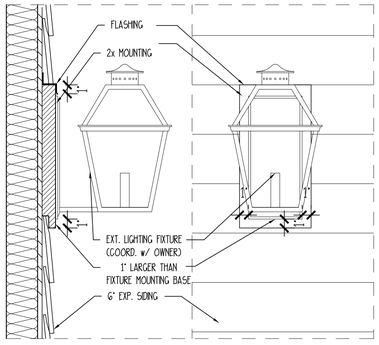

4 EXTERIOR LIGHTING MOUNT DETAIL

SCALE: 1 1/2" = 1'-0"

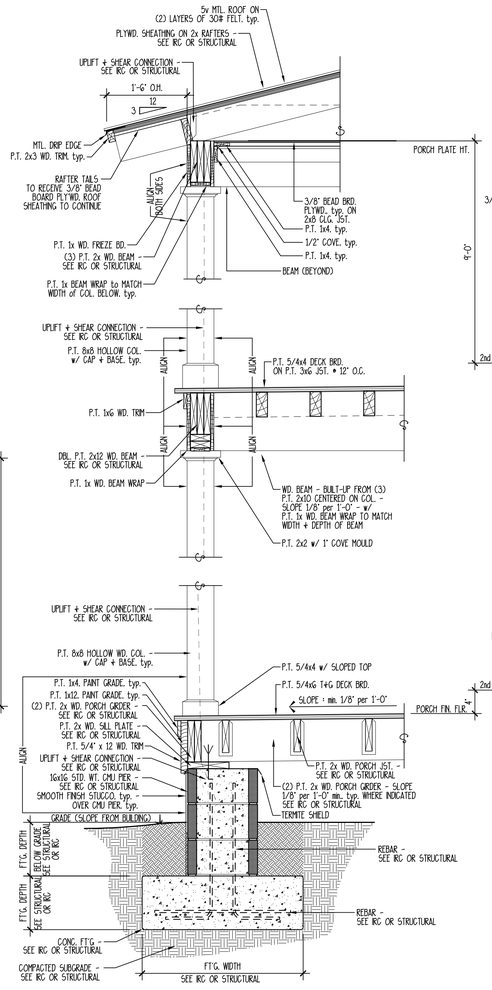

2 TYPICAL PORCH SECTION

SCALE: 3/4" = 1'-0"

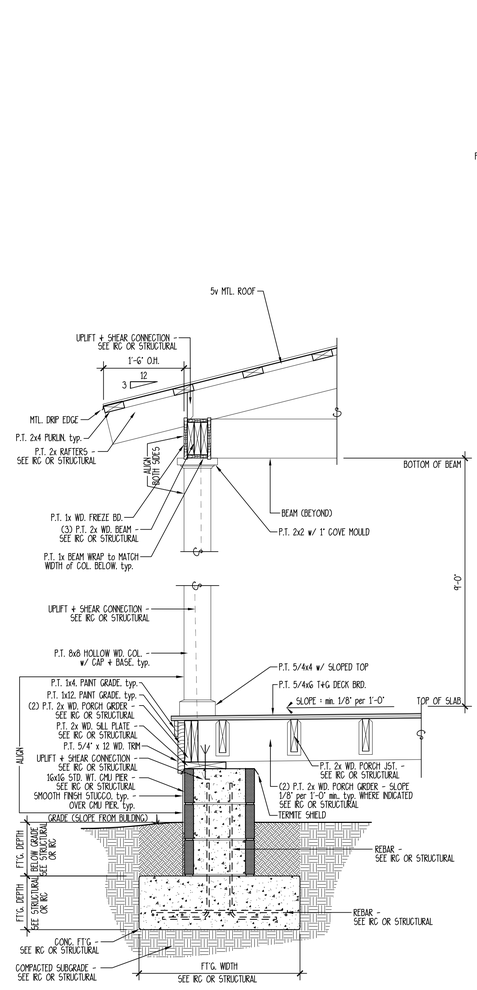

3 TYPICAL STOOP SECTION

SCALE: 3/4" = 1'-0"

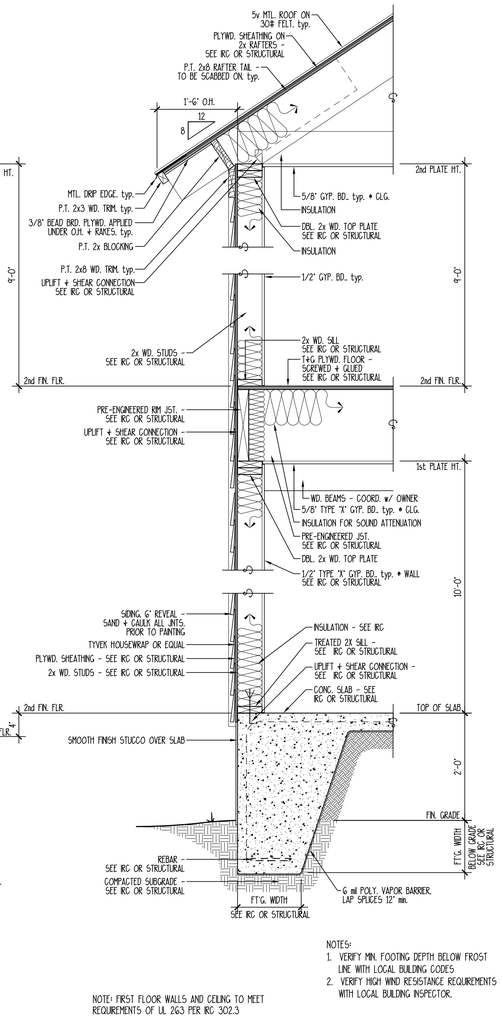

NOTE: FIRST FLOOR WALLS AND CEILING TO MEET REQUIREMENTS OF UL 263 PER IRC 302.3

NOTES:
1. VERIFY MIN. FOOTING DEPTH BELOW FROST LINE WITH LOCAL BUILDING CODES
2. VERIFY HIGH WIND RESISTANCE REQUIREMENTS WITH LOCAL BUILDING INSPECTOR.

1 TYPICAL WALL SECTION

SCALE: 3/4" = 1'-0"

THE HARRINGTON DUPLEX 19359

ALLISON RAMSEY Architects, Inc. creating sustainable timeless design
1003 Charles St.
Beaufort SC. 29902
(843) 986-0559
www.allisonramseyarchitect.com

THIS PLAN HAS BEEN PREPARED TO MEET TOP PROFESSIONAL STANDARDS AND PRACTICES. HOWEVER, BUILDING CODES AND ENVIRONMENTAL CONDITIONS VARY FOR DIFFERENT LOCATIONS. IT IS THE RESPONSIBILITY OF THE PURCHASER OF THIS PLAN TO PERFORM THE FOLLOWING:
•VERIFY COMPLIANCE WITH ALL LOCAL CODES
•VERIFY ALL DIMENSIONS PRIOR TO PROCEEDING WITH CONSTRUCTION
PLANS INDICATE LOCATIONS ONLY. ENGINEERING ASPECTS SHOULD BE CONDUCTED BY A LICENSED ENGINEER.
•FHA, & TVA PLUMBING LOCATIONS ARE NOT INCLUDED. THESE SHOULD BE OBTAINED FROM A LOCAL MECH. CONTRACTOR OR ENGINEER TO ENSURE COMPLIANCE WITH LOCAL CODE
•ANY SITE ELEMENTS SHOWN ARE SUGGESTIVE ONLY. FOR PARTICULAR DESIGN AND CONDITIONS.
•NOTIFY ALL UTILITIES BEFORE YOU DIG. (CALL "DIGSAFE" 811 OR 1-888-344-7233)

DATE:	8/19/2020
JOB NO.	19359
DWN. BY:	RKM
DWG. NAME:	19359DWG

Copyright 2020 by Allison Ramsey Architects, Inc. All rights reserved.

SYMBOLS + KEYS

DOOR AND WINDOW SIZE KEY
2860 = 2'-8" WIDE x 6'-0" HIGH

DRAWING NUMBER
SHEET NUMBER
= SECTION OR ELEVATION

ROOM TITLE
KITCHEN
10' CLG. WOOD
CEILING HEIGHT
FLOOR FINISH

1 **DRAWING TITLE**
DETAIL OR ELEVATION NUMBER

14.00' = ELEVATION ABOVE SEA LEVEL
= REVISION NUMBER
= REVISION CLOUD
= PLAN REFERENCE NORTH

REF. N

	SINGLE POLE SWITCH
	THREE WAY SWITCH
	FOUR WAY SWITCH
	DIMMER SWITCH
	SPEED CONTROL
	DUPLEX OUTLET
	1/2 HOT OUTLET
WP	WATER PROOF OUTLET
GF	GROUND FAULT OUTLET
	QUADRUPLEX OUTLET
	SPECIALTY OUTLET
	FLOOR OUTLET
	TELEPHONE JACK
T	THERMOSTAT
	TELEVISION JACK
V	VENT
V/L	VENT w/ LIGHT
	SURFACE MOUNTED FIXTURE
	RECESSED FIXTURE
	WALL MOUNTED FIXTURE
	FLOOD LIGHT
	LED FIXTURE
	CEILING FAN
	STRIP LIGHTING
J	CEILING BOX
B	DOOR CHIME
	ELECTRICAL PANEL
S	SMOKE DETECTOR
CO	CARBON MONOXIDE DETECTOR

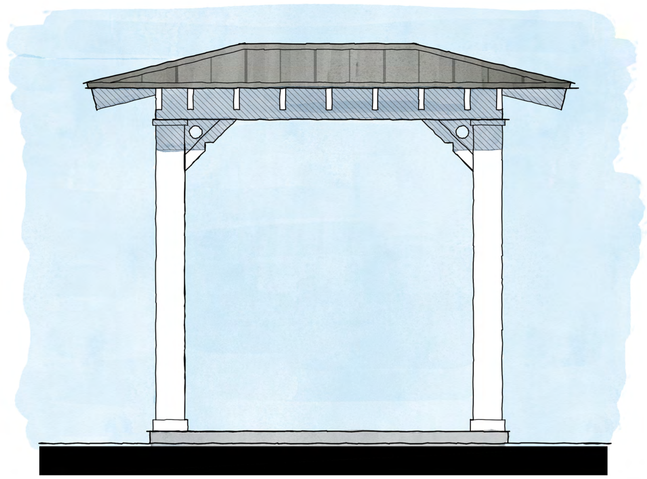

CONCEPTUAL RENDERING

DRAWING INDEX

0 COVER SHEET
1 MAIL PAVILION
2 BIKE PAVILION

GENERAL INFO.

AREA CALCULATIONS
PAVILION = 100 S.F.

23408 - MAIL & BIKE PAVILIONS

LOCATION OF PROJECT, COUNTY, STATE

MAIL & BIKE PAVILIONS

ALLISON RAMSEY Architects Inc. creating sustainable timeless design
1003 Charles St.
Beaufort SC, 29902
(843) 986-0559
www.allisonramseyarchitect.com

THIS PLAN HAS BEEN PREPARED TO MEET TOP PROFESSIONAL STANDARDS AND PRACTICES. HOWEVER, BUILDING CODES AND ENVIRONMENTAL CONDITIONS VARY FOR DIFFERENT LOCATIONS. IT IS THE RESPONSIBILITY OF THE PURCHASER OF THIS PLAN TO PERFORM THE FOLLOWING BEFORE BEGINNING CONSTRUCTION. ALLISON RAMSEY ARCHITECTS, INC. ASSUMES NO LIABILITY FOR ANY WORK CONSTRUCTED FROM THIS PLAN.

- VERIFY ALL DIMENSIONS PRIOR TO PROCEEDING WITH CONSTRUCTION
- VERIFY COMPLIANCE WITH ALL LOCAL CODES
- PLANS INDICATE LOCATIONS ONLY. ENGINEERING ASPECTS SHOULD INCORPORATE ACTUAL SITE CONDITIONS
- MAC & PLUMBING LAYOUTS ARE NOT INCLUDED. THESE SHOULD BE OBTAINED FROM A LOCAL MECH. CONTRACTOR OR ENGINEER TO ENSURE COMPLIANCE WITH LOCAL CODE AND THAT EQUIPMENT IS SIZED CORRECTLY FOR YOUR PARTICULAR MEANS AND CONDITIONS.
- VERIFY ALL SITE/LOCAL ELEMENTS WITH LOCAL ENGINEER AND/OR ARCHITECT.

DATE:	01/29/2020
JOB NO.	19407-MAL
DWN. BY:	JWAS
DWG. NAME:	19407-MAL.DWG

0

Copyright 2020 by Allison Ramsey Architects, Inc. All rights reserved.

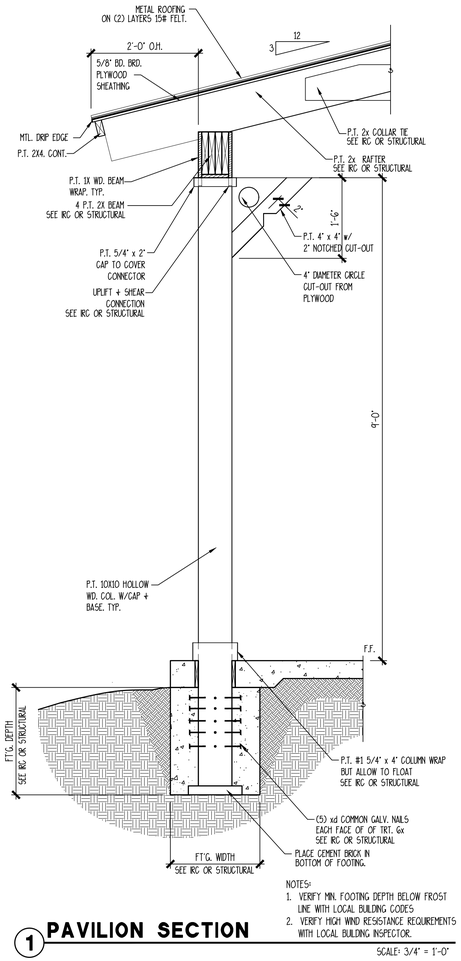

NOTES:
1. VERIFY MIN. FOOTING DEPTH BELOW FROST LINE WITH LOCAL BUILDING CODES
2. VERIFY HIGH WIND RESISTANCE REQUIREMENTS WITH LOCAL BUILDING INSPECTOR.

1 PAVILION SECTION

SCALE: 3/4" = 1'-0"

	SINGLE POLE SWITCH
	THREE WAY SWITCH
	FOUR WAY SWITCH
	DIMMER SWITCH
	SPEED CONTROL
	DUPLEX OUTLET
	1/2 HOT OUTLET
WP	WATER PROOF OUTLET
GF	GROUND FAULT OUTLET
	QUADRUPLEX OUTLET
	SPECIALTY OUTLET
	FLOOR OUTLET
	TELEPHONE JACK
T	THERMOSTAT
TV	TELEVISION JACK
V	VENT
V/L	VENT w/ LIGHT
	SURFACE MOUNTED FIXTURE
	RECESSED FIXTURE
	WALL MOUNTED FIXTURE
	FLOOD LIGHT
	LED FIXTURE
	CEILING FAN
	STRIP LIGHTING
J	CEILING BOX
B	DOOR CHIME
	ELECTRICAL PANEL
S	SMOKE DETECTOR
CO	CARBON MONOXIDE DETECTOR

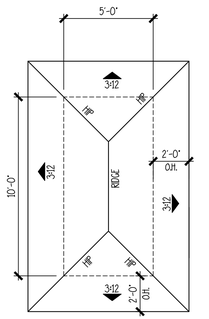

ROOF PLAN

SCALE: 1/4" = 1'-0"

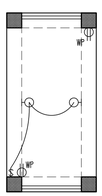

MAIL PAVILION ELECTRICAL PLAN

SCALE: 1/4" = 1'-0"

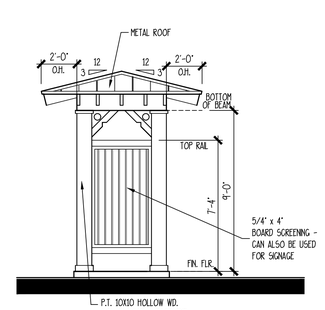

FRONT/ REAR ELEVATION

SCALE: 1/4" = 1'-0"

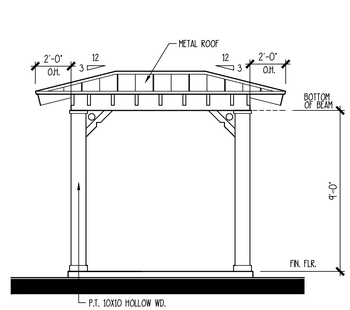

RIGHT/ LEFT ELEVATION

SCALE: 1/4" = 1'-0"

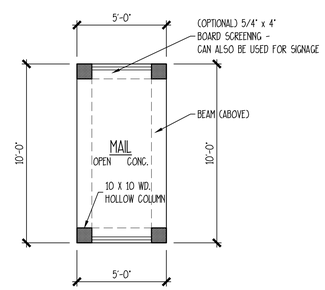

MAIL PAVILION PLAN

SCALE: 1/4" = 1'-0"

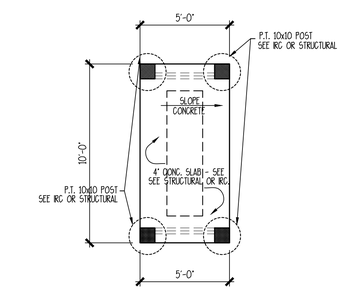

FOUNDATION PLAN

SCALE: 1/4" = 1'-0"

MAIL & BIKE PAVILIONS

ALLISON RAMSEY Architects, Inc. creating sustainable timeless design
1003 Charles St.
Beaufort SC, 29902
(843) 986-0559
www.allisonramseyarchitect.com

THIS PLAN HAS BEEN PREPARED TO MEET CITY PROFESSIONAL STANDARDS AND PRACTICES, CONCRETE, BUILDING CODES AND ENVIRONMENTAL CONDITIONS VARY FOR DIFFERENT LOCATIONS. IT IS THE RESPONSIBILITY OF THE PURCHASER OF THIS PLAN TO PERFORM THE FOLLOWING BEFORE BEGINNING CONSTRUCTION. ALLISON RAMSEY ARCHITECTS, INC. ASSUMES NO LIABILITY FOR ANY WORK CONSTRUCTED FROM THIS PLAN.

- VERIFY COMPLIANCE WITH ALL LOCAL CODES
- VERIFY ALL DIMENSIONS PRIOR TO PROCEEDING WITH CONSTRUCTION
- PLANS INDICATE LOCATIONS ONLY. ENGINEERING ASPECTS SHOULD BE PERFORMED BY A LICENSED ENGINEER.
- STAIRS, PLUMBING LAYOUTS ARE NOT INCLUDED. THESE SHOULD BE OBTAINED FROM A LOCAL MEP CONTRACTOR OR ENGINEER TO ENSURE COMPLIANCE WITH LOCAL CODE AND/OR THE CONDITIONS AT SITE. CONCRETE FOR FOOTINGS, SLABS, STAIRS AND CURBWORK SHOULD BE DESIGNED BY A LICENSED ENGINEER TO ENSURE COMPLIANCE WITH LOCAL CODES

MAIL & BIKE PAVILIONS

ALLISON RAMSEY Architects, PA... creating sustainable timeless design
1003 Charles St.
Beaufort SC, 29902
(843) 986-0559
www.allisonramseyarchitect.com

THIS PLAN HAS BEEN PREPARED TO MEET TYP PROFESSIONAL STANDARDS AND PRACTICES. HOWEVER, BUILDING CODES AND ENVIRONMENTAL CONDITIONS VARY FOR DIFFERENT LOCATIONS. IT IS THE RESPONSIBILITY OF THE ENGAGER OF THIS PLAN TO VERIFY THE FOLLOWING BEFORE BEGINNING CONSTRUCTION AND TO MAKE CHANGES AS NECESSARY TO CONFORM TO ANY SITE CONSTRAINTS FROM THIS PLAN.

-VERIFY ALL DIMENSIONS PRIOR TO FABRICATING AND CONSTRUCTION
-VERIFY COMPLIANCE WITH ALL LOCAL CODES
-PLANS INDICATE LOCATIONS ONLY; ENGINEERING EXPERTISE SHOULD INCORPORATE ALL SPECIFICATIONS
-STRUC. & PLUMBING LAYOUTS ARE NOT INCLUDED. THESE SHOULD BE OBTAINED FROM A LOCAL PROS. CONTRACTOR OR ENGINEER TO ENSURE COMPLIANCE WITH LOCAL CODE
-ANY DETAILS/PLANS SHOWN ARE FOR GENERAL CONCEPT ONLY. CONTRACTOR SHOULD VERIFY ALL STRUCTURAL LOADINGS/SPECIFICATIONS FOR CONSTRUCTION LOCATION AND CONDITIONS.

DATE:	01/29/2020
JOB NO.	19407-MAIL
DWN. BY:	JWAS
DWG. NAME:	19407-MAILBIKE

Copyright 2020 by Allison Ramsey Architects, Inc. All rights reserved.

⇔	SINGLE POLE SWITCH
⇔3	THREE WAY SWITCH
⇔4	FOUR WAY SWITCH
⇔D	DIMMER SWITCH
⇔SC	SPEED CONTROL
⇔	DUPLEX OUTLET
⇔	1/2 HOT OUTLET
⇔ WP	WATER PROOF OUTLET
⇔ GF	GROUND FAULT OUTLET
⇔	QUADRUPLEX OUTLET
◀	SPECIALTY OUTLET
◎	FLOOR OUTLET
◁	TELEPHONE JACK
(T)	THERMOSTAT
TV	TELEVISION JACK
V	VENT
V/L	VENT w/ LIGHT
	SURFACE MOUNTED FIXTURE
○	RECESSED FIXTURE
	WALL MOUNTED FIXTURE
	FLOOD LIGHT
	LED FIXTURE
	CEILING FAN
	STRIP LIGHTING
(J)	CEILING BOX
(B)	DOOR CHIME
	ELECTRICAL PANEL
(S)	SMOKE DETECTOR
CO	CARBON MONOXIDE DETECTOR

ROOF PLAN
SCALE: 1/4" = 1'-0"

FRONT/ REAR ELEVATION
SCALE: 1/4" = 1'-0"



RIGHT/ LEFT ELEVATION
SCALE: 1/4" = 1'-0"

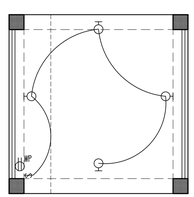

BIKE PAVILION ELECTRICAL PLAN
SCALE: 1/4" = 1'-0"

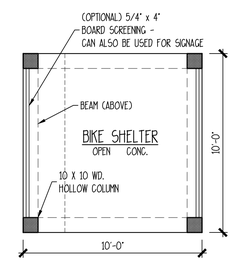

BIKE PAVILION PLAN
SCALE: 1/4" = 1'-0"

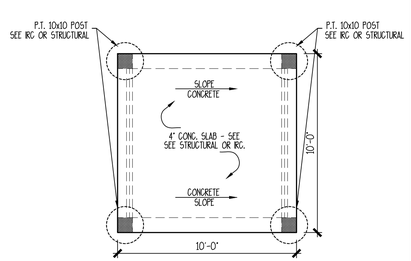

FOUNDATION PLAN
SCALE: 1/4" = 1'-0"

SYMBOLS + KEYS

DOOR AND WINDOW SIZE KEY
2860 = 2'-8" WIDE x 6'-0" HIGH

DRAWING NUMBER — 1/3 — SHEET NUMBER = SECTION OR ELEVATION

KITCHEN — ROOM TITLE
10" CLG. — CEILING HEIGHT
WOOD — FLOOR FINISH

1 **DRAWING TITLE**
DETAIL OR ELEVATION NUMBER

14.00' = ELEVATION ABOVE SEA LEVEL
1 = REVISION NUMBER
= REVISION CLOUD
REF. 88 = PLAN REFERENCE NORTH

S	SINGLE POLE SWITCH
S3	THREE WAY SWITCH
S4	FOUR WAY SWITCH
SD	DIMMER SWITCH
SDC	SPEED CONTROL
	DUPLEX OUTLET
	1/2 HOT OUTLET
WP	WATER PROOF OUTLET
GF	GROUND FAULT OUTLET
	QUADRUPLEX OUTLET
	SPECIALTY OUTLET
	FLOOR OUTLET
	TELEPHONE JACK
T	THERMOSTAT
TV	TELEVISION JACK
V	VENT
V/L	VENT w/ LIGHT
	SURFACE MOUNTED FIXTURE
	RECESSED FIXTURE
	WALL MOUNTED FIXTURE
	FLOOD LIGHT
	LED FIXTURE
	CEILING FAN
	STRIP LIGHTING
	CEILING BOX
	DOOR CHIME
	ELECTRICAL PANEL
S	SMOKE DETECTOR
CO	CARBON MONOXIDE DETECTOR



CONCEPTUAL RENDERING

DRAWING INDEX

0	COVER SHEET
1	FOUNDATION PLAN FIRST FLOOR PLAN LOFT PLAN
2	ELECTRICAL LAYOUT ROOF PLAN
3	ELEVATIONS
4	WALL SECTIONS + DETAILS
SP1	SPECIFICATIONS
SP2	SPECIFICATIONS
SP3	SPECIFICATIONS

GENERAL INFO.

AREA CALCULATIONS

FIRST FLOOR HEATED = 408 S.F. COVERED PORCH = 84 S.F.

LOFT FLOOR HEATED = 205 S.F.

TOTAL HEATED = 613 S.F.

WHARF STREET COTTAGE - 20207

WHARF STREET COTTAGE 20207

ALLISON RAMSEY Architects, inc. - creating sustainable timeless design
1003 Charles St.
Beaufort SC, 29902
(843) 986-0559
www.allisonramseyarchitect.com

THIS PLAN HAS BEEN PREPARED TO MEET TYP PROFESSIONAL STANDARDS AND PRACTICES. HOWEVER, BUILDING CODES AND ENVIRONMENTAL CONDITIONS VARY FOR DIFFERENT LOCATIONS. IT IS THE RESPONSIBILITY OF THE CONTRACTOR OF THIS PLAN TO ENFORCE THE FOLLOWING BEFORE CONSTRUCTION BEGINS. ALLISON RAMSEY ARCHITECTS, INC ASSUMES NO LIABILITY FOR ANY HOME CONSTRUCTED FROM THIS PLAN.

- VERIFY ALL DIMENSIONS PRIOR TO PROCEEDING WITH CONSTRUCTION
- VERIFY COMPLIANCE WITH ALL LOCAL CODES
- ELEVATIONS ARE APPROXIMATE
- FLOOR JOIST LOCATIONS ONLY, ENGINEERING ASPECTS SHOULD BE CONSIDERED
- ALL SET BACKS
- HVAC & PLUMBING LOCATIONS ARE NOT INCLUDED. THESE SHOULD BE OBTAINED FROM A LOCAL MECH. CONTRACTOR OR ENGINEER TO ENSURE COMPLIANCE WITH LOCAL CODE
- ANY SITE ELEMENTS, SUCH AS DRIVEWAYS, LOCATION OF UTILITIES, ETC. ARE NOT INCLUDED
- VERIFY ALL SPECIFICATIONS WITH LOCAL CONTRACTORS AND/OR ARCHITECT

DATE:	10/26/2023
JOB NO.	20207
DWN. BY:	JTS
DWG. NAME:	20207.DWG

0

Copyright 2023 by Allison Ramsey Architects, Inc. All rights reserved.

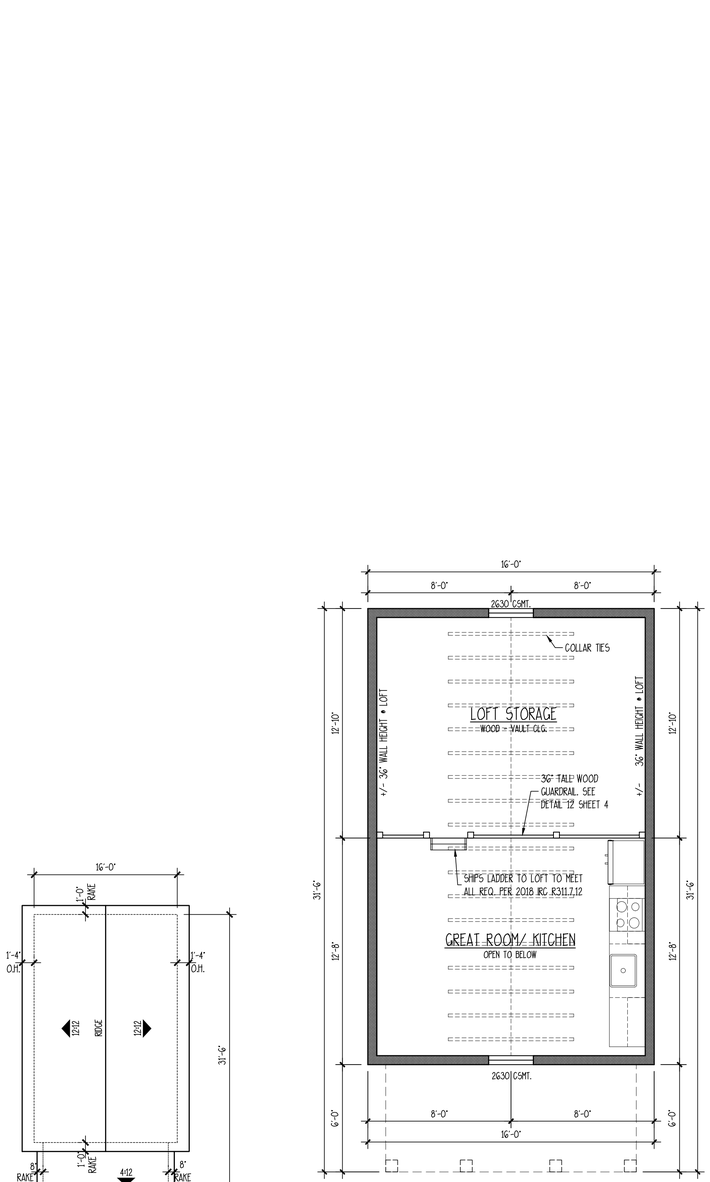

ROOF PLAN

SCALE: 1/8" = 1'-0"

*NOTE:

1. ALL PENETRATIONS TO BE LOCATED AS INCONSPICUOUSLY AS POSSIBLE. ▲ REAR OR SIDES OF HOUSE AS POSSIBLE.
2. ROOF PENETRATIONS NEED TO BE KEPT TO A MINIMUM. (COMBINED WHEN POSSIBLE).
3. ALL ROOF / WALL PENETRATIONS TO BE PAINTED TO MATCH ROOF COLOR.
4. TWO (2) LAYERS UNDERLAYMENT REQUIRED WHEN 4:12 ROOF PITCH OR LOWER.
5. METAL ROOF SEAMS NOT TO EXCEED 16' O.C.
6. METAL ROOF SEAMS TO BE 1 1/2" TO 1 3/4" IN HEIGHT

3 LOFT PLAN

SCALE: 1/4" = 1'-0"

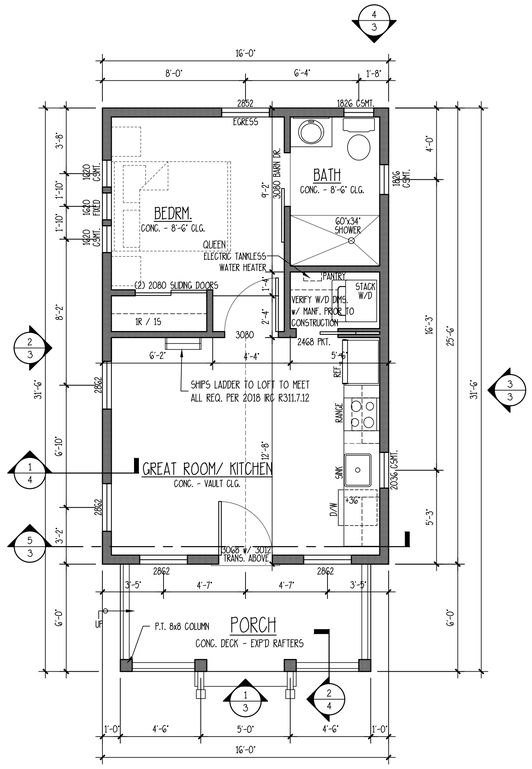

2 FIRST FLOOR PLAN

SCALE: 1/4" = 1'-0"

Copyright 2023 by Allison Ramsey Architects, Inc. All rights reserved.

WHARF STREET COTTAGE

ALLISON | RAMSEY Architects, Inc. creating sustainable timeless design
1003 Charles St.
Beaufort SC, 29902
(843) 986-0559
www.allisonramseyarchitect.com

THIS PLAN HAS BEEN PREPARED TO MEET FOR PROTOTYPICAL SUBMISSIONS AND PERMITS. HOWEVER, BUILDING CODES AND ENVIRONMENTAL CONDITIONS VARY FOR DIFFERENT LOCATIONS. IT IS THE RESPONSIBILITY OF THE PURCHASER OF THIS PLAN TO STRETCH OR COLUMN, IF NECESSARY, AND MODIFY THIS PLAN AS REQUIRED TO MEET THE REQUIREMENTS OF ANY HOME CONSTRUCTED FROM THIS PLAN.

- VERIFY ALL DIMENSIONS PRIOR TO PROCEEDING WITH CONSTRUCTION
- VERIFY COMPLIANCE WITH ALL LOCAL CODES
- PLANS INDICATE LOCATIONS ONLY; ENGINEERING EXPERTS SHOULD INCORPORATE ALL ACTUAL CONDITIONS
- STRUCT. & PLUMBING LAYOUTS ARE NOT INCLUDED. THESE SHOULD BE OBTAINED FROM A LOCAL PROFESSIONAL ENGINEER OR ENGINEER TO ENSURE COMPLIANCE WITH LOCAL CODE
- ANY WITH ELEVATIONS IN QUESTIONABLE CONDITIONS FOR TOPOGRAPHICAL REASONS AND CONDITIONS. VERIFY ALL STRUCTURAL COMPONENTS WITH LOCAL ENGINEER AND ARCHITECT

DATE:	06/22/2023
JOB NO.	20207
DWN. BY:	JTS
DWG. NAME:	20207.DWG

1

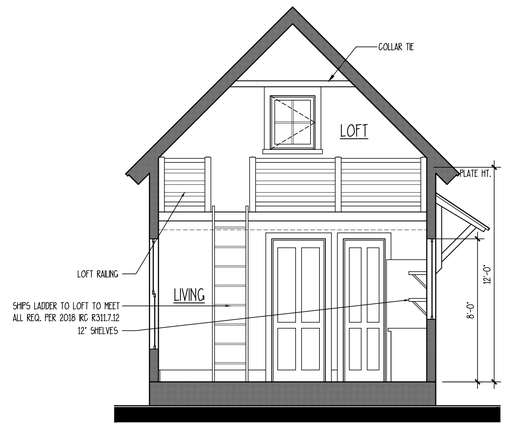

3 SECTION

SCALE: 1/4" = 1'-0"

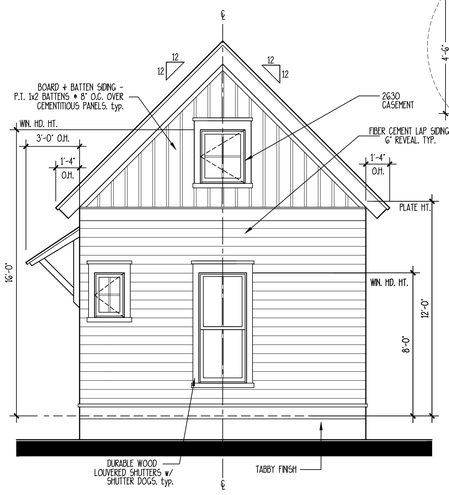

4 REAR ELEVATION

SCALE: 1/4" = 1'-0"

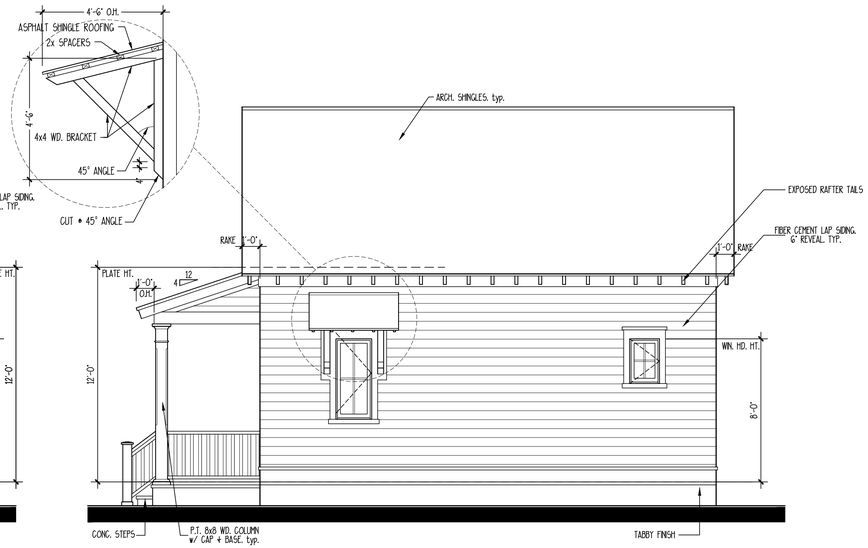

3 RIGHT ELEVATION

SCALE: 1/4" = 1'-0"

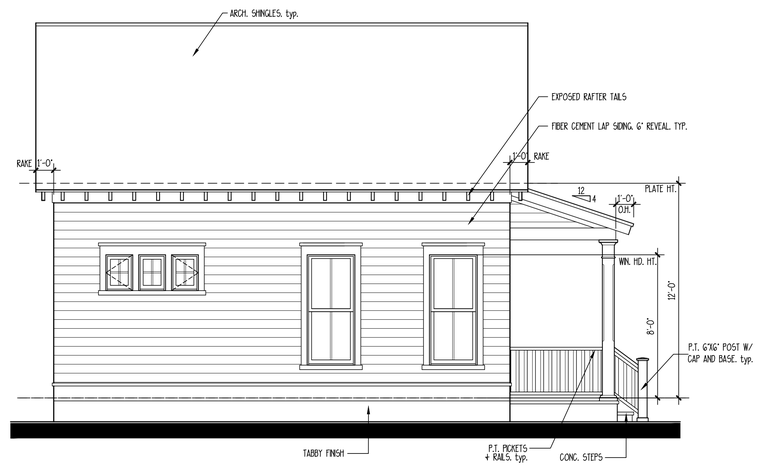

2 LEFT ELEVATION

SCALE: 1/4" = 1'-0"

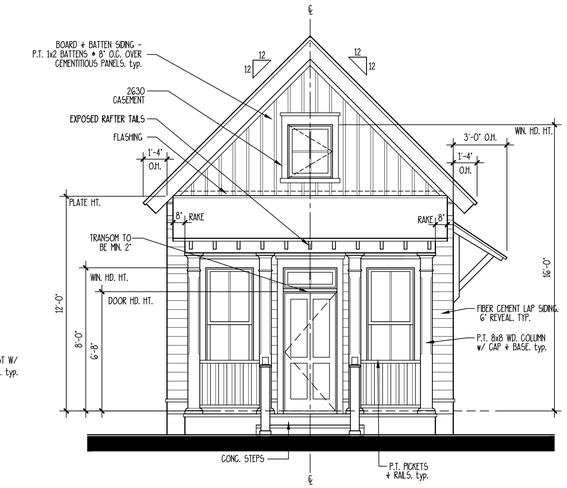

1 FRONT ELEVATION

SCALE: 1/4" = 1'-0"

WHARF STREET COTTAGE

ALLISON RAMSEY Architects Inc. creating sustainable timeless design
1003 Charles St.
Beaufort SC, 29902
(843) 986-0559
www.allisonramseyarchitect.com

THIS PLAN HAS BEEN PREPARED TO MEET TOP PROFESSIONAL STANDARDS AND PRACTICES. HOWEVER, BUILDING CODES AND ENVIRONMENTAL CONDITIONS VARY FOR DIFFERENT LOCATIONS. IT IS THE RESPONSIBILITY OF THE PURCHASER OF THIS PLAN TO PERFORM THE FOLLOWING BEFORE BEGINNING CONSTRUCTION. ALLISON RAMSEY ARCHITECTS, INC. ASSUMES NO LIABILITY FOR ANY HOME CONSTRUCTED FROM THIS PLAN.

- VERIFY ALL DIMENSIONS PRIOR TO PROCEEDING WITH CONSTRUCTION
- VERIFY COMPLIANCE WITH ALL LOCAL CODES
- PLANS PICKETS LOCATIONS ONLY, ENGINEERING ASPECTS SHOULD INCORPORATE ACTUAL SITE CONDITIONS.
- MAG + PLUMBING LOCATIONS ARE NOT INCLUDED. THESE SHOULD BE OBTAINED FROM A LOCAL MECH. CONTRACTOR OR ENGINEER TO ENSURE COMPLIANCE WITH LOCAL CODE AND THAT EQUIPMENT IS SIZED CORRECTLY FOR YOUR PARTICULAR REGION AND CONDITIONS.
- VERIFY ALL STRUCTURAL ELEMENTS WITH LOCAL ENGINEER AND/OR ARCHITECT.

DATE:	10/26/2023
JOB NO.	20207
DWN. BY:	JT5
DWG. NAME:	20207.DWG

Copyright 2023 by Allison Ramsey Architects, Inc. All rights reserved.

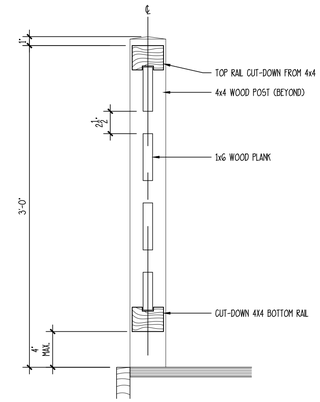

10 LOFT GUARDRAIL DETAIL

SCALE: 1 1/2" = 1'-0"

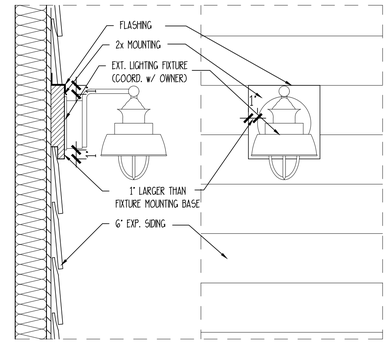

9 EXTERIOR LIGHTING MOUNT DETAIL

SCALE: 1 1/2" = 1'-0"

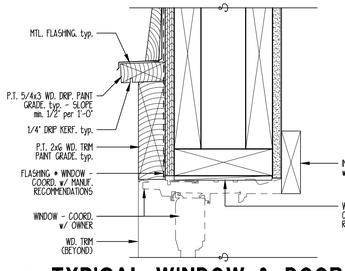

8 TYPICAL WINDOW & DOOR HEAD

SCALE: 3" = 1'-0"

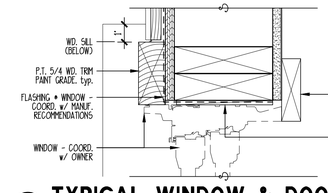

7 TYPICAL WINDOW & DOOR JAMB

SCALE: 3" = 1'-0"

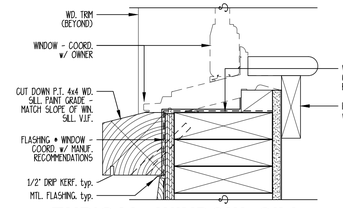

6 TYPICAL WINDOW SILL

SCALE: 3" = 1'-0"

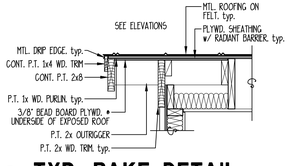

3 TYP. RAKE DETAIL

SCALE: 3/4" = 1'-0"

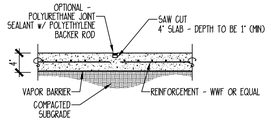

5 CONTROL JOINT DETAIL

SCALE: 3/4" = 1'-0"

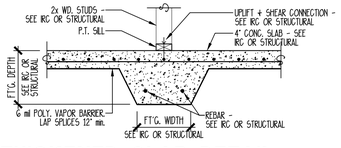

4 THICKENED SLAB DETAIL

NOT TO SCALE

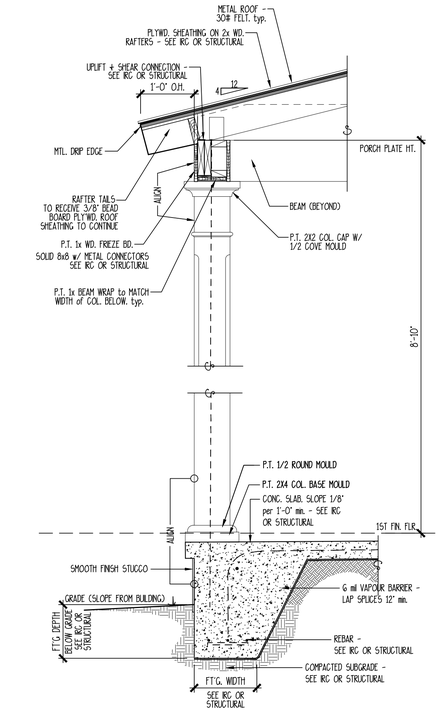

2 TYPICAL PORCH SECTION

SCALE: 3/4" = 1'-0"

1 TYPICAL WALL SECTION

SCALE: 3/4" = 1'-0"

WHARF STREET COTTAGE

ALLISON RAMSEY Architects, Inc. - creating sustainable timeless design
1003 Charles St.
Beaufort SC, 29902
(843) 986-0559
www.allisonramseyarchitect.com

THIS PLAN HAS BEEN PREPARED TO MEET CUP PROFESSIONAL STANDARDS AND PRACTICES. HOWEVER, BUILDING CODES AND ENVIRONMENTAL CONDITIONS VARY FOR DIFFERENT LOCATIONS. IT IS THE RESPONSIBILITY OF THE PURCHASER OF THIS PLAN TO PERFORM THE FOLLOWING BEFORE CONSTRUCTION BEGINS. ALLISON RAMSEY ARCHITECTS, INC. ASSUMES NO RESPONSIBILITY FOR ANY HOME CONSTRUCTED FROM THIS PLAN.

•VERIFY COMPLIANCE WITH ALL LOCAL CODES
•VERIFY ALL DIMENSIONS PRIOR TO PROCEEDING WITH CONSTRUCTION
•PLANS INDICATE LOCATIONS ONLY; ENGINEERING ASPECTS SHOULD BE CONSIDERED
•HVAC, PLUMBING LAYOUTS ARE NOT INCLUDED. THESE SHOULD BE OBTAINED FROM A LOCAL MECH. CONTRACTOR OR ENGINEER TO ENSURE COMPLIANCE WITH LOCAL CODE
•ANY SIMILARITIES TO SITE CONDITIONS FOR YOUR LOCALE ARE COINCIDENTAL
•ANY SIMILARITIES TO OTHER DESIGNS ARE COINCIDENTAL UNLESS OTHERWISE NOTED.

DATE:	10/26/2023
JOB NO.	20207
DWN. BY:	JTS
DWG. NAME:	20207.DWG

Copyright 2023 by Allison Ramsey Architects, Inc. All rights reserved.

SYMBOLS + KEYS

DOOR AND WINDOW SIZE KEY

2860 = 2'-8" WIDE x 6'-0" HIGH

DRAWING NUMBER — 1 / 3 = SECTION OR ELEVATION — SHEET NUMBER

ROOM TITLE

KITCHEN

10' CLG. WOOD

CEILING HEIGHT — FLOOR FINISH

1 **DRAWING TITLE**

DETAIL OR ELEVATION NUMBER

14.00' = ELEVATION ABOVE SEA LEVEL

1 = REVISION NUMBER

= REVISION CLOUD

REF. N = PLAN REFERENCE NORTH

	SINGLE POLE SWITCH
	THREE WAY SWITCH
	FOUR WAY SWITCH
	DIMMER SWITCH
	SPEED CONTROL
	DUPLEX OUTLET
	1/2 HOT OUTLET
WP	WATER PROOF OUTLET
GF	GROUND FAULT OUTLET
	QUADRUPLEX OUTLET
	SPECIALTY OUTLET
	FLOOR OUTLET
	TELEPHONE JACK
T	THERMOSTAT
	TELEVISION JACK
V	VENT
V/L	VENT w/ LIGHT
	SURFACE MOUNTED FIXTURE
	RECESSED FIXTURE
	WALL MOUNTED FIXTURE
	FLOOD LIGHT
	LED FIXTURE
	CEILING FAN
	STRIP LIGHTING
	CEILING BOX
	DOOR CHIME
	ELECTRICAL PANEL
S	SMOKE DETECTOR
CO	CARBON MONOXIDE DETECTOR



CONCEPTUAL RENDERING

GENERAL INFO.

AREA CALCULATIONS

UNIT A:

FIRST FLOOR HEATED = 265 S.F.

SECOND FLOOR HEATED = 305 S.F.

TOTAL HEATED = 570 S.F.

COVERED PORCH = 194 S.F.

UNIT FOOTPRINT = 368 S.F.

UNIT B:

FIRST FLOOR HEATED = 265 S.F.

SECOND FLOOR HEATED = 305 S.F.

TOTAL HEATED = 570 S.F.

UNIT FOOTPRINT = 265 S.F.

OVERALL STRUCTURE HEATED = 1140 S.F.

OVERALL FOOTPRINT = 736 S.F.

KING'S COURT

KING'S COURT

ALLISON RAMSEY Architects Inc. creating sustainable timeless design
1003 Charles St.
Beaufort SC, 29902
(843) 986-0559
www.allisonramseyarchitect.com

THIS PLAN HAS BEEN PREPARED TO MEET TOP PROFESSIONAL STANDARDS AND PRACTICES. HOWEVER, BUILDING CODES AND ENVIRONMENTAL CONDITIONS VARY FOR DIFFERENT LOCATIONS. IT IS THE RESPONSIBILITY OF THE PURCHASER OF THIS PLAN TO PERFORM THE FOLLOWING BEFORE BEGINNING CONSTRUCTION. ALLISON RAMSEY ARCHITECTS, INC. ASSUMES NO LIABILITY FOR ANY WORK CONSTRUCTED FROM THIS PLAN.

•VERIFY ALL DIMENSIONS PRIOR TO PROCEEDING WITH CONSTRUCTION
•VERIFY COMPLIANCE WITH ALL LOCAL CODES
•PLANS INDICATE LOCATIONS ONLY. ENGINEERING ASPECTS SHOULD INCORPORATE ACTUAL SITE CONDITIONS.
•TRUE & PLUMBING LAYOUTS ARE NOT INCLUDED. THESE SHOULD BE OBTAINED FROM A LOCAL MECH. CONTRACTOR OR ENGINEER TO ENSURE COMPLIANCE WITH LOCAL CODE AND THAT EQUIPMENT IS SIZED CORRECTLY FOR YOUR PARTICULAR REGION AND CONDITIONS.
•VERIFY ALL STRUCTURAL ELEMENTS WITH LOCAL ENGINEER AND/OR ARCHITECT.

DATE:	08/27/2021
JOB NO.	20412-1
DWN. BY:	MCC
DWG. NAME:	20412-1.DWG

0

Copyright 2021 by Allison Ramsey Architects, Inc. All rights reserved.

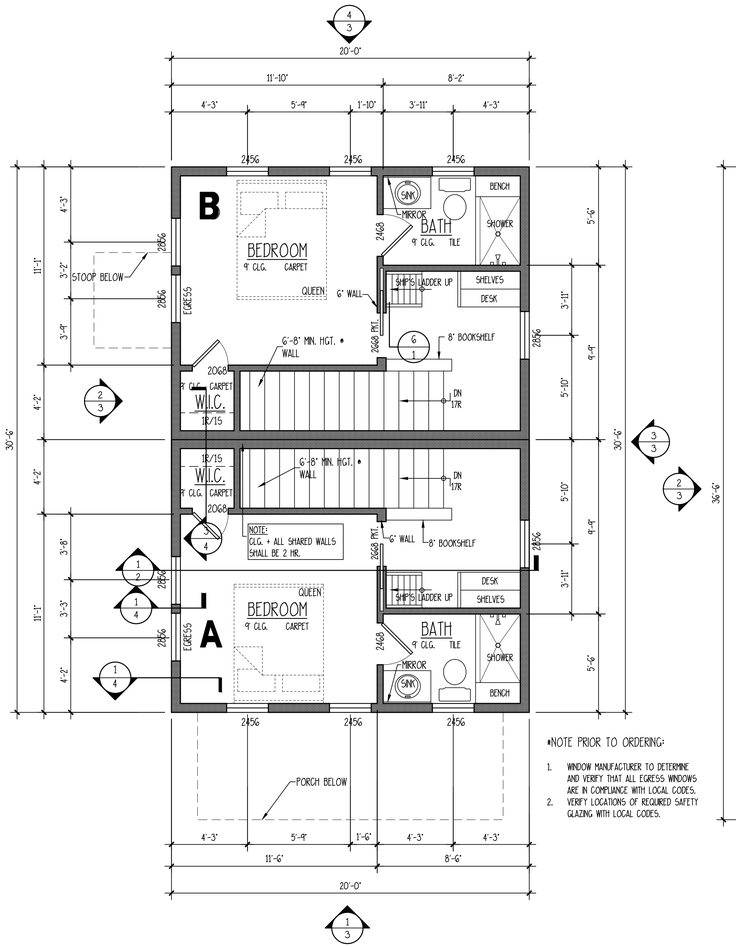

A&B SECOND FLOOR PLAN

SCALE: 1/4" = 1'-0"

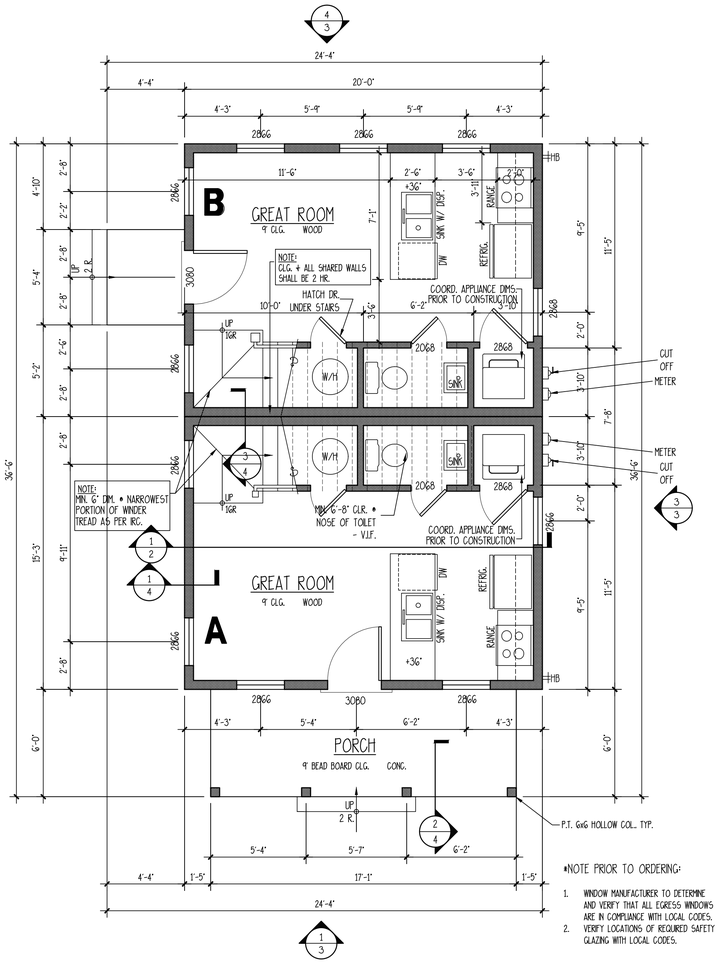

A&B FIRST FLOOR PLAN

SCALE: 1/4" = 1'-0"

KING'S COURT

ALLISON RAMSEY Architects, inc. creating sustainable timeless design
1003 Charles St.
Beaufort SC, 29902
(843) 986-0559
www.allisonramseyarchitect.com

THIS PLAN HAS BEEN PREPARED TO MEET STAP PROFESSIONAL STANDARDS AND PRACTICES. HOWEVER, BUILDING CODES AND ENVIRONMENTAL CONDITIONS VARY FOR DIFFERENT LOCATIONS. IT IS THE RESPONSIBILITY OF THE PURCHASER OF THIS PLAN TO OVERSEE THE FOLLOWING: ANY NECESSARY CHANGES TO MEET LOCAL CODES SHOULD BE DISCUSSED WITH THE ARCHITECT. ALLISON RAMSEY ARCHITECTS, INC. ASSUMES NO LIABILITY FOR ANY WORK CONSTRUCTED FROM THIS PLAN.

- VERIFY ALL DIMENSIONS PRIOR TO PROCEEDING WITH CONSTRUCTION
- VERIFY COMPLIANCE WITH ALL LOCAL CODES
- ATTEND PRECAST LOCATIONS ONLY (ENGINEERING ASPECTS SHOULD BE COORDINATED BY A LOCAL STRUCTURAL ENGINEER)
- ALL MEP & PLUMBING LAYOUTS ARE NOT INCLUDED. THESE SHOULD BE OBTAINED FROM A LOCAL MEP& CONTRACTOR OR ENGINEER TO ENSURE COMPLIANCE WITH LOCAL CODE
- NOTE THAT ELEVATION IS SELECT SYMMETRICAL FROM PERSPECTIVE VIEWS AND CONFORMS. VERIFY ALL TOPOGRAPHICAL CONDITIONS & LOCAL ZONING AND SETBACKS

Copyright 2021 by Allison Ramsey Architects, Inc. All rights reserved.

DATE:	08/27/2021
JOB NO.	20412-1
DWN. BY:	MCC
DWG. NAME:	20412-1.DWG

1

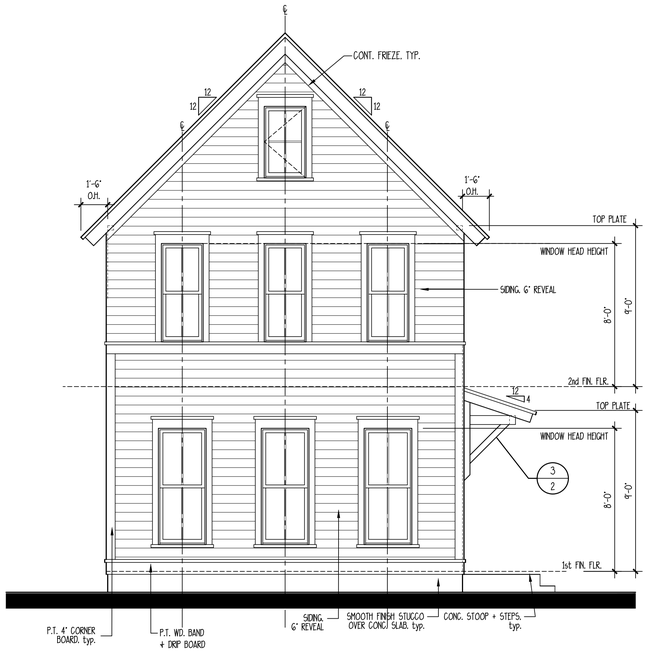

4 A&B REAR ELEVATION

SCALE: 1/4" = 1'-0"

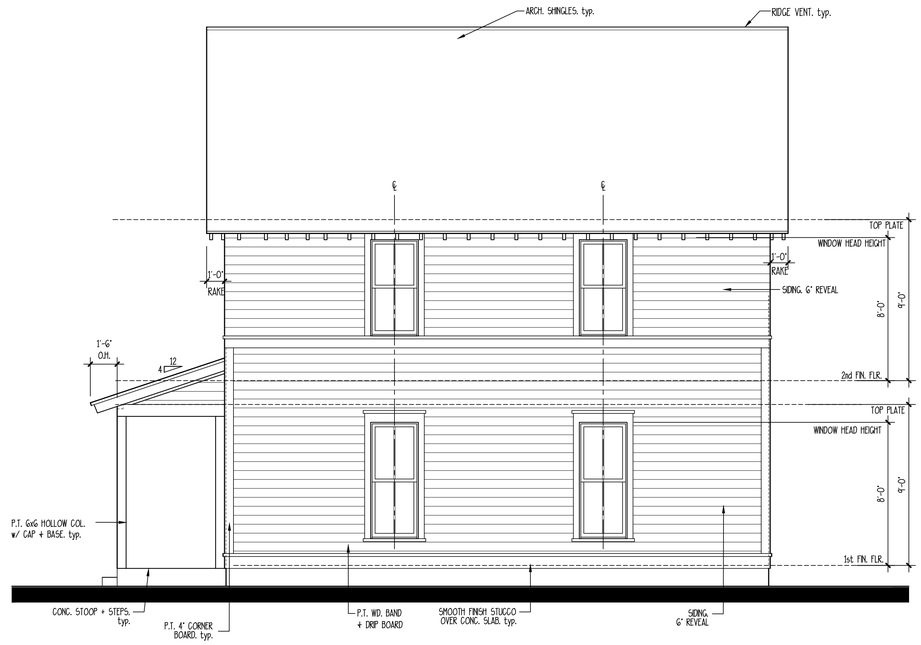

3 A&B RIGHT ELEVATION

SCALE: 1/4" = 1'-0"



2 A&B LEFT ELEVATION

SCALE: 1/4" = 1'-0"

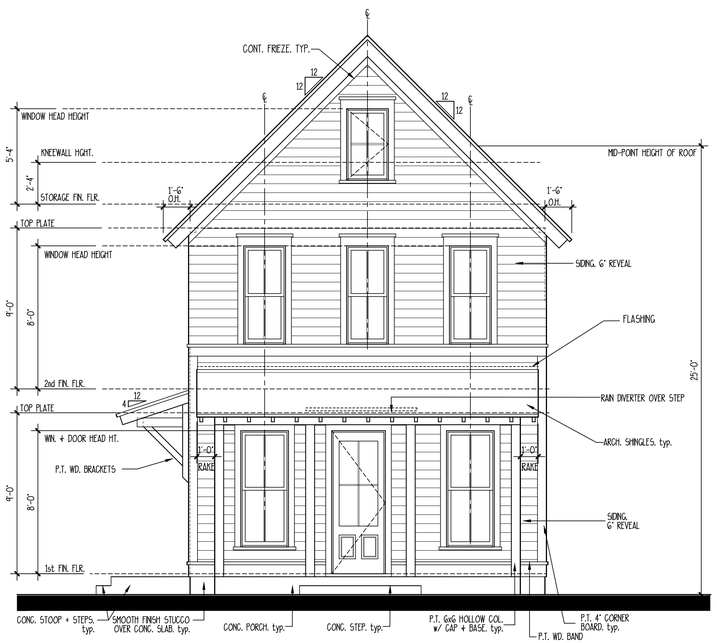

1 A&B FRONT ELEVATION

SCALE: 1/4" = 1'-0"

KING'S COURT

ALLISON RAMSEY Architects, Inc. creating sustainable timeless design
1033 Charles St.
Beaufort S.C. 29902
(843) 986-0559
www.allisonramseyarchitect.com

THIS PLAN HAS BEEN PREPARED TO MEET CERTAIN PROFESSIONAL STANDARDS AND PRACTICES. HOWEVER, BUILDING CODES AND ENVIRONMENTAL CONDITIONS VARY FOR DIFFERENT LOCATIONS. IT IS THE RESPONSIBILITY OF THE PURCHASER OF THIS PLAN TO PERFORM THE FOLLOWING: A) ENSURE THAT THE PLAN CONFORMS TO ALL LOCAL CODES AND ORDINANCES. B) ENGAGE LOCAL PROFESSIONALS AS REQUIRED TO ADAPT AND MODIFY THE PLAN AS NECESSARY TO COMPLY WITH ANY MORE CONSTRICTED ITEMS THIS PLAN.

- VERIFY ALL DIMENSIONS PRIOR TO PROCEEDING WITH CONSTRUCTION
- VERIFY COMPLIANCE WITH ALL LOCAL CODES
- PLANS INDICATE LOCATIONS ONLY; ENGINEERING ASPECTS SHOULD ACCOMPANY ALL SITE SPECIFIC DRAWINGS
- STRUCT. & PLUMBING LAYOUTS ARE NOT INCLUDED. THESE SHOULD BE OBTAINED FROM A LOCAL MECH. CONTRACTOR OR ENGINEER TO ENSURE COMPLIANCE WITH LOCAL CODE AND THAT EQUIPMENT IS SIZED CORRECTLY FOR YOUR PARTICULAR HOUSE AND LOCATION.
- VERIFY ALL STRUCTURAL LOADINGS WITH LOCAL ENGINEER AND/OR ARCHITECT

DATE:	08/27/2021
JOB NO.	20412-1
DWN. BY:	MCC
DWG. NAME:	20412-1DWG

Copyright 2021 by Allison Ramsey Architects, Inc. All rights reserved.

3

SYMBOLS + KEYS

DOOR AND WINDOW SIZE KEY

2868O = 2'-8" WIDE x 6'-0" HIGH

DRAWING NUMBER — 1/3 — SHEET NUMBER = SECTION OR ELEVATION

KITCHEN — ROOM TITLE

10" CLG. — CEILING HEIGHT

WOOD — FLOOR FINISH

1 DRAWING TITLE

1 — DETAIL OR ELEVATION NUMBER

14.00' = ELEVATION ABOVE SEA LEVEL

1 = REVISION NUMBER

= REVISION CLOUD

REF. BSL = PLAN REFERENCE NORTH

	SINGLE POLE SWITCH
3	THREE WAY SWITCH
4	FOUR WAY SWITCH
DM	DIMMER SWITCH
SC	SPEED CONTROL
	DUPLEX OUTLET
	1/2 HOT OUTLET
WP	WATER PROOF OUTLET
GF	GROUND FAULT OUTLET
	QUADRUPLEX OUTLET
	SPECIALTY OUTLET
	FLOOR OUTLET
	TELEPHONE JACK
T	THERMOSTAT
TV	TELEVISION JACK
V	VENT
V/L	VENT w/ LIGHT
	SURFACE MOUNTED FIXTURE
	RECESSED FIXTURE
	WALL MOUNTED FIXTURE
	FLOOD LIGHT
	LED FIXTURE
	CEILING FAN
	STRIP LIGHTING
	CEILING BOX
	DOOR CHIME
	ELECTRICAL PANEL
S	SMOKE DETECTOR
CO	CARBON MONOXIDE DETECTOR



CONCEPTUAL RENDERING

GENERAL INFO.

AREA CALCULATIONS

UNIT A:
FIRST FLOOR HEATED = 265 S.F.
SECOND FLOOR HEATED = 305 S.F.
TOTAL HEATED = 570 S.F.
COVERED PORCH = 194 S.F.
UNIT FOOTPRINT = 368 S.F.

UNIT B:
FIRST FLOOR HEATED = 265 S.F.
SECOND FLOOR HEATED = 305 S.F.
TOTAL HEATED = 570 S.F.
UNIT FOOTPRINT = 265 S.F.

OVERALL STRUCTURE HEATED = 1140 S.F.

OVERALL FOOTPRINT = 736 S.F.

KING'S COURT II

KING'S COURT II

ALLISON RAMSEY Architects, inc. creating sustainable timeless design
1003 Charles St.
Beaufort SC, 29902
(843) 986-0559
www.allisonramseyarchitect.com

THIS PLAN HAS BEEN PREPARED TO MEET TOP PROFESSIONAL STANDARDS AND PRACTICES. HOWEVER, BUILDING CODES AND ENVIRONMENTAL CONDITIONS VARY FOR DIFFERENT LOCATIONS. IT IS THE RESPONSIBILITY OF THE CONTRACTOR OF THIS PLAN TO ENFORCE THE FOLLOWING. BEFORE CONSTRUCTION BEGINS, ALLISON RAMSEY ARCHITECTS, INC ASSUMES NO LIABILITY FOR ANY HOME CONSTRUCTED FROM THIS PLAN.

- VERIFY ALL DIMENSIONS PRIOR TO PROCEEDING WITH CONSTRUCTION
- VERIFY COMPLIANCE WITH ALL LOCAL CODES
- PLANS INDICATE LOCATIONS ONLY, ENGINEERING ASPECTS SHOULD BE ACCURATELY DETERMINED
- ALL SEPTIC LOCATIONS AND DESIGNS MUST BE APPROVED BY A LICENSED SEPTIC ENGINEER
- HVAC & PLUMBING LAYOUTS ARE NOT RULERED. THESE SHOULD BE OBTAINED FROM A LOCAL MECH. CONTRACTOR OR ENGINEER TO ENSURE COMPLIANCE WITH LOCAL CODE AND PROPER EQUIPMENT & SIZE CONNECTS FOR YOUR PARTICULAR REGION AND CONDITIONS.
- ADJUST ALL ELEVATIONS & GRADES AS NEEDED TO ENSURE PROPER DRAINAGE AWAY FROM STRUCTURE

DATE:	08/27/2021
JOB NO.	2042-1
DWN. BY:	MCG
DWG. NAME:	2042-1.DWG

Copyright 2021 by Allison Ramsey Architects, Inc. All rights reserved.

0

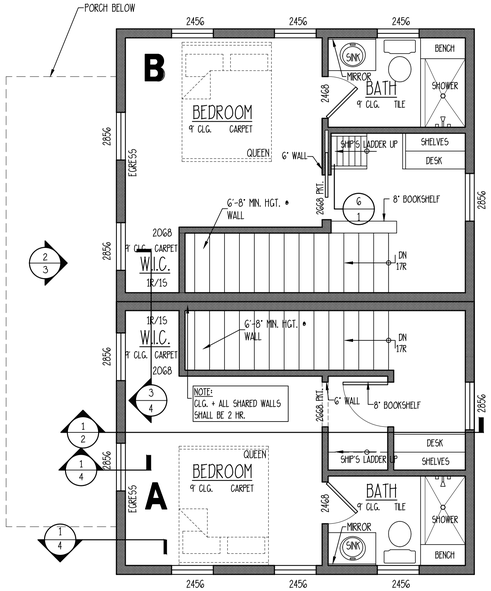

*NOTE PRIOR TO ORDERING:

1. WINDOW MANUFACTURER TO DETERMINE AND VERIFY THAT ALL EGRESS WINDOWS ARE IN COMPLIANCE WITH LOCAL CODES.
2. VERIFY LOCATIONS OF REQUIRED SAFETY GLAZING WITH LOCAL CODES.

SECOND FLOOR PLAN

SCALE: 1/4" = 1'-0"

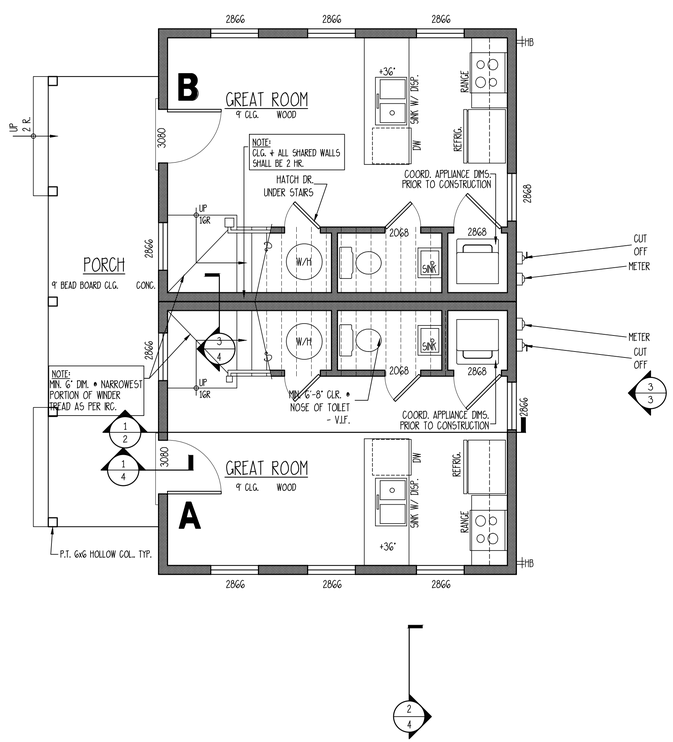

*NOTE PRIOR TO ORDERING:

1. WINDOW MANUFACTURER TO DETERMINE AND VERIFY THAT ALL EGRESS WINDOWS ARE IN COMPLIANCE WITH LOCAL CODES.
2. VERIFY LOCATIONS OF REQUIRED SAFETY GLAZING WITH LOCAL CODES.

FIRST FLOOR PLAN

SCALE: 1/4" = 1'-0"

KING'S COURT II

ALLISON RAMSEY Architects, inc. creating sustainable timeless design
1003 Charles St.
Beaufort SC, 29902
(843) 986-0559
www.allisonramseyarchitect.com

THIS PLAN HAS BEEN PREPARED TO MEET TYP PROFESSIONAL STANDARDS AND PRACTICES. HOWEVER, BUILDING CODES AND ENVIRONMENTAL CONDITIONS VARY FOR DIFFERENT LOCATIONS. IT IS THE RESPONSIBILITY OF THE PURCHASER OF THIS PLAN TO VERIFY THE FOLLOWING. BY PURCHASING THIS PLAN, PURCHASER AGREES THAT ALLISON RAMSEY ARCHITECTS, INC. ASSUMES NO LIABILITY FOR ANY WORK CONSTRUCTED FROM THIS PLAN.

- VERIFY ALL DIMENSIONS PRIOR TO PROCEEDING WITH CONSTRUCTION
- VERIFY COMPLIANCE WITH ALL LOCAL CODES
- ATLAS ROCKET LOCATIONS ONLY, ENGINEERING ASPECTS SHOULD ACCOMPANY
- ALL R-VALUES SHOWN ARE MINIMUM
- STRUCT. & PLUMBING LAYOUTS ARE NOT INCLUDED. THESE SHOULD BE OBTAINED FROM A LOCAL PE/SE CONSTRUCTOR OR ENGINEER TO ENSURE COMPLIANCE WITH LOCAL CODE
- ANY PART EXCERPTED IN ELECTRONIC FILE FORM FROM PLAN SHOULD BE REVIEWED AND VERIFIED BY A PE/SE. ALLISON RAMSEY ARCHITECTS, INC. DISCLAIMS ANY LIABILITY

Copyright 2021 by Allison Ramsey Architects, Inc. All rights reserved.

DATE:	08/27/2021
JOB NO.	20412-1
DWN. BY:	MCC
DWG. NAME:	20412-1.DWG

1

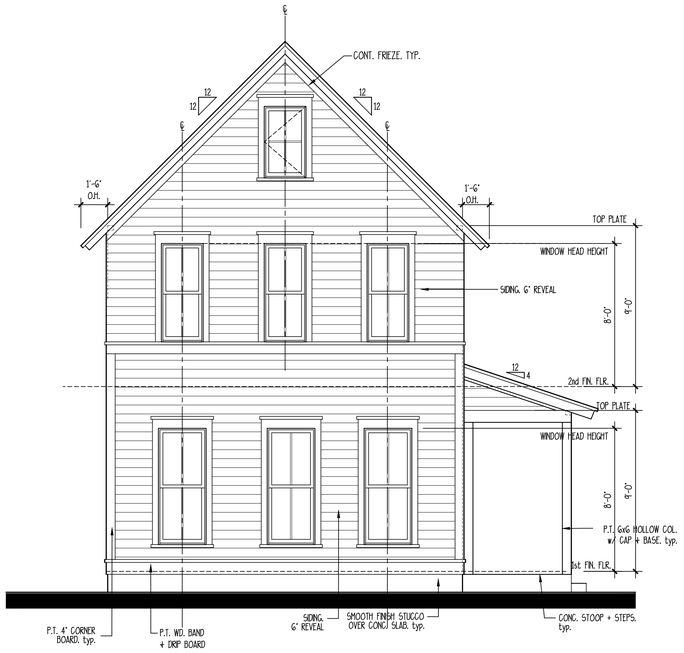

4 **LEFT ELEVATION**

SCALE: 1/4" = 1'-0"

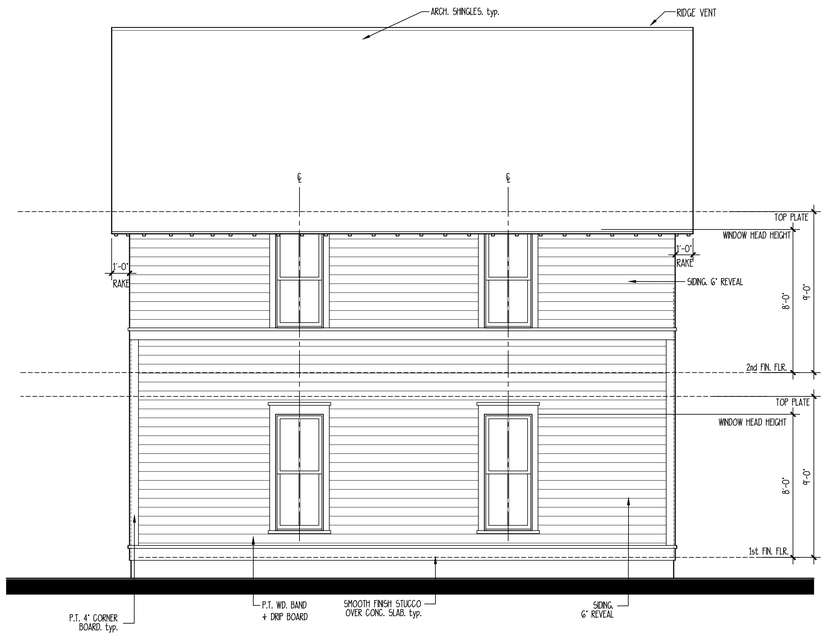

3 **REAR ELEVATION**

SCALE: 1/4" = 1'-0"



2 **FRONT ELEVATION**

SCALE: 1/4" = 1'-0"

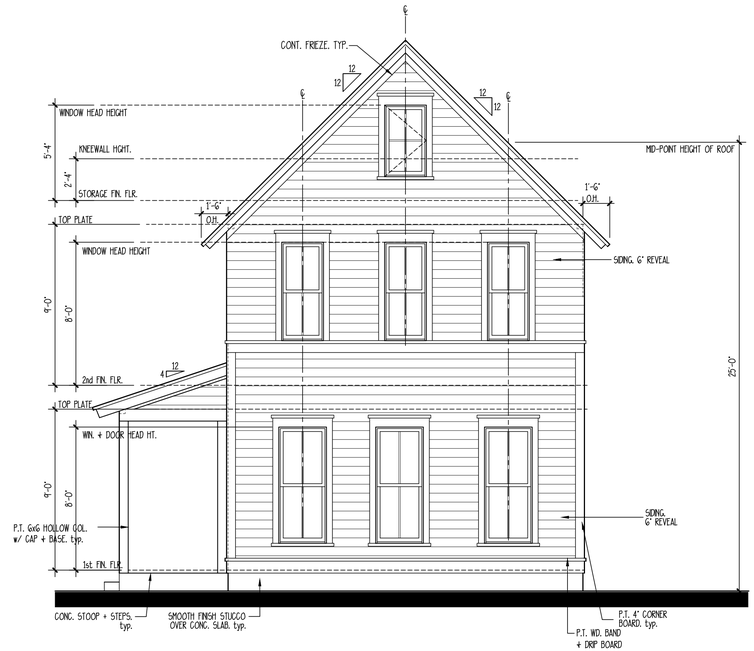

1 **RIGHT ELEVATION**

SCALE: 1/4" = 1'-0"

KING'S COURT II

ALLISON RAMSEY
Architects Inc. creating sustainable timeless design
1003 Charles St.
Beaufort SC. 29902
(843) 986-0559
www.allisonramseyarchitect.com

THIS PLAN HAS BEEN PREPARED TO MEET TOP PROFESSIONAL STANDARDS AND PRACTICES. HOWEVER, BUILDING CODES AND ENVIRONMENTAL CONDITIONS VARY FOR DIFFERENT LOCATIONS. IT IS THE RESPONSIBILITY OF THE PURCHASER OF THIS PLAN TO PREPARE THE FOLLOWING BEFORE BEGINNING CONSTRUCTION. ALLISON RAMSEY ARCHITECTS, INC. ASSUMES NO LIABILITY FOR ANY WORK CONSTRUCTED FROM THIS PLAN.
•VERIFY ALL DIMENSIONS PRIOR TO PROCEEDING WITH CONSTRUCTION
•VERIFY COMPLIANCE WITH ALL LOCAL CODES
•PLANS INDICATE LOCATIONS ONLY, ENGINEERING ASPECTS SHOULD INCORPORATE ACTUAL SITE CONDITIONS.
•MAG + PLUMBING LAYOUTS ARE NOT INCLUDED. THESE SHOULD BE OBTAINED FROM A LOCAL MECH. CONTRACTOR OR ENGINEER TO ENSURE COMPLIANCE WITH LOCAL CODE AND THAT EQUIPMENT IS SIZED CORRECTLY FOR YOUR PARTICULAR REGION AND CONDITIONS.
•VERIFY ALL STRUCTURAL ELEMENTS WITH LOCAL ENGINEER AND/OR ARCHITECT.

DATE:	08/27/2021
JOB NO.	20412-1
DWN. BY:	MCC
DWG. NAME:	20412-1DWG

Copyright 2021 by Allison Ramsey Architects, Inc. All rights reserved.

3

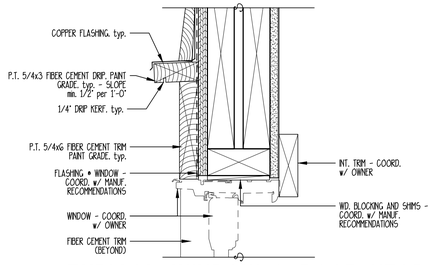

7 TYPICAL WINDOW & DOOR HEAD

SCALE: 3" = 1'-0"

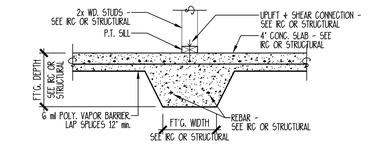

8 THICKENED SLAB DETAIL

NOT TO SCALE

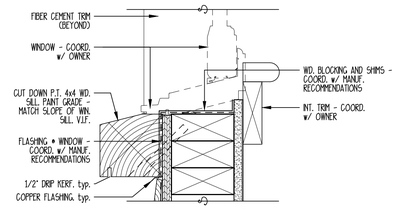

9 TYPICAL WINDOW SILL

SCALE: 3" = 1'-0"

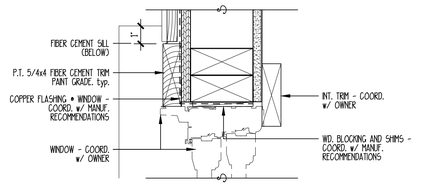

10 TYPICAL WINDOW & DOOR JAMB

SCALE: 3" = 1'-0"

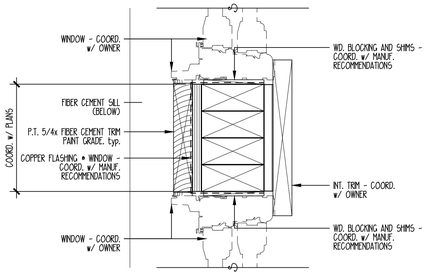

6 TYPICAL WINDOW JAMB @ MULL

SCALE: 3" = 1'-0"

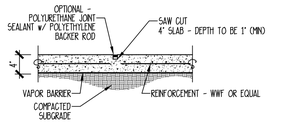

11 CONTROL JOINT DETAIL

SCALE: 3/4" = 1'-0"

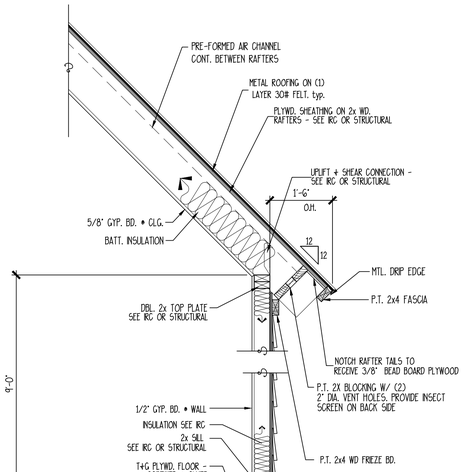

NOTES:
1. VERIFY MIN. FOOTING DEPTH BELOW FROST LINE WITH LOCAL CODES OR RG.
2. VERIFY HIGH WIND RESISTANCE REQUIREMENTS WITH LOCAL CODES OR RG.

1 TYPICAL WALL SECTION

SCALE: 3/4" = 1'-0"

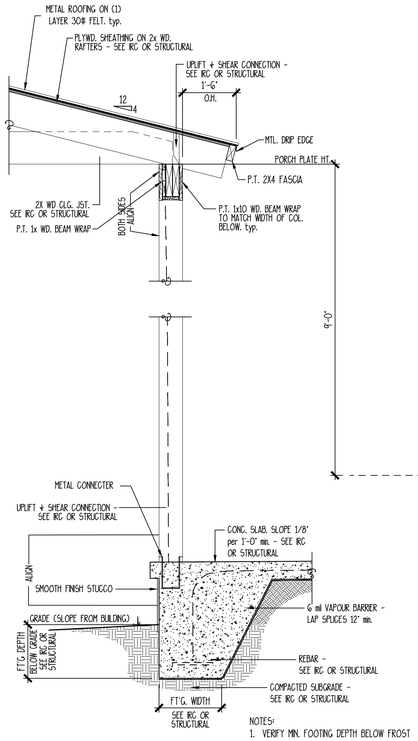

NOTES:
1. VERIFY MIN. FOOTING DEPTH BELOW FROST LINE WITH LOCAL BUILDING CODES
WITH LOCAL BUILDING INSPECTOR.

2 TYPICAL PORCH SECTION

SCALE: 3/4" = 1'-0"

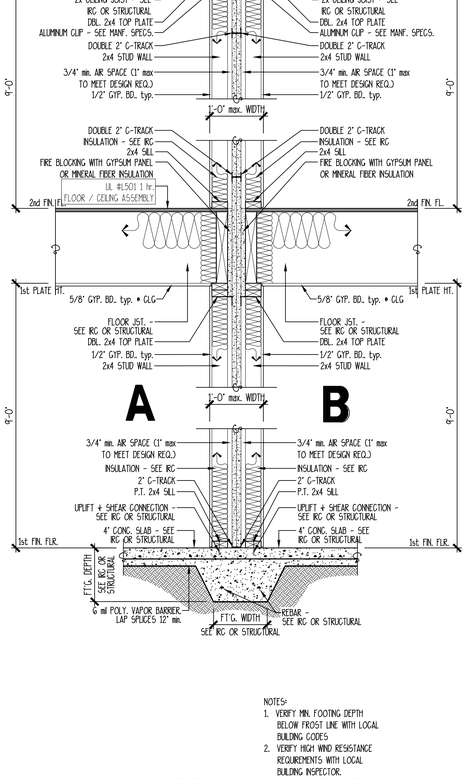

NOTES:
1. VERIFY MIN. FOOTING DEPTH BELOW FROST LINE WITH LOCAL BUILDING CODES
2. VERIFY HIGH WIND RESISTANCE REQUIREMENTS WITH LOCAL BUILDING INSPECTOR.

3 2 HR FIRE-WALL SECTION UL# U373

SCALE: 3/4" = 1'-0"

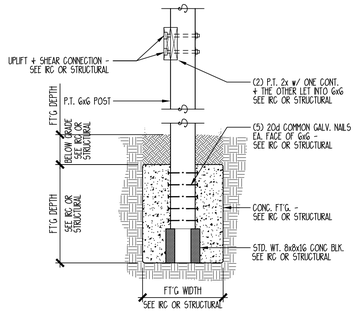

5 PICKET & RAIL DETAIL

SCALE: 1 1/2" = 1'-0"

4 6x6 POST DETAIL

SCALE: 3/4" = 1'-0"

Copyright 2021 by Allison Ramsey Architects, Inc. All rights reserved.

KING'S COURT II

ALLISON RAMSEY Architects, inc. creating sustainable timeless designs
1003 Charles St.
Beaufort SC, 29902
(843) 986-0559
www.allisonramseyarchitect.com

THIS PLAN HAS BEEN PREPARED TO MEET CBP PROFESSIONAL STANDARDS AND PRACTICES. HOWEVER, BUILDING CODES AND ENVIRONMENTAL CONDITIONS VARY FOR DIFFERENT LOCATIONS. IT IS THE RESPONSIBILITY OF THE PURCHASER OF THIS PLAN TO VERIFY THE FOLLOWING ANY HOME CONSTRUCTED FROM THIS PLAN.

- VERIFY ALL DIMENSIONS PRIOR TO PROCEEDING WITH CONSTRUCTION
- VERIFY COMPLIANCE WITH ALL LOCAL CODES
- PLANS INDICATE LOCATIONS ONLY; ENGINEERING ASPECTS SHOULD INCORPORATE
- STRUCT. PLUMBING LAYOUTS ARE NOT INCLUDED. THESE SHOULD BE OBTAINED FROM A LOCAL PROF. CONTRACTOR OR ENGINEER TO ENSURE COMPLIANCE WITH LOCAL CODE
- ANY MATERIALS OR DESIGN CHANGES MAY REQUIRE ADDITIONAL ENGINEERING
- VERIFY ALL STRUCTURAL COMPONENTS, SYSTEMS AND MATERIALS

DATE:	08/27/2021
JOB NO.	2041Z-1
DWN. BY:	MGC
DWG. NAME:	2041Z-1.DWG

4

SYMBOLS + KEYS

DOOR AND WINDOW SIZE KEY
2860 = 2'-8" WIDE x 6'-0" HIGH

DRAWING NUMBER — 1/3 — SHEET NUMBER = SECTION OR ELEVATION

KITCHEN — ROOM TITLE
10' CLG. — CEILING HEIGHT
WOOD — FLOOR FINISH

1 DRAWING TITLE
1 — DETAIL OR ELEVATION NUMBER

14.00' = ELEVATION ABOVE SEA LEVEL
1 = REVISION NUMBER
= REVISION CLOUD
REF. = PLAN REFERENCE NORTH

S	SINGLE POLE SWITCH
S3	THREE WAY SWITCH
S4	FOUR WAY SWITCH
SDM	DIMMER SWITCH
SFC	SPEED CONTROL
	DUPLEX OUTLET
	1/2 HOT OUTLET
WP	WATER PROOF OUTLET
GF	GROUND FAULT OUTLET
	QUADRUPLEX OUTLET
	SPECIALTY OUTLET
	FLOOR OUTLET
	TELEPHONE JACK
T	THERMOSTAT
TV	TELEVISION JACK
V	VENT
V/L	VENT w/ LIGHT
	SURFACE MOUNTED FIXTURE
	RECESSED FIXTURE
	WALL MOUNTED FIXTURE
	FLOOD LIGHT
	LED FIXTURE
	CEILING FAN
	STRIP LIGHTING
	CEILING BOX
	DOOR CHIME
	ELECTRICAL PANEL
S	SMOKE DETECTOR
CO	CARBON MONOXIDE DETECTOR



CONCEPTUAL RENDERING

DRAWING INDEX

0	COVER SHEET
S	SITE DIAGRAM
1	FOUNDATION/ FLOOR PLANS
2	ELEVATIONS
3	SECTIONS/ DETAILS
4	ELECTRICAL LAYOUTS/ ROOF PLAN
SP1	SPECIFICATIONS
SP2	SPECIFICATIONS
SP3	SPECIFICATIONS

GENERAL INFO.

AREA CALCULATIONS

FIRST FLOOR HEATED = 922 S.F.
SECOND FLOOR HEATED = 494 S.F.
TOTAL HEATED = 1416 S.F.

STOOP = 14 S.F.
COVERED PORCH = 120 S.F.

23408 - THE TAYLOR

THE TAYLOR

ALLISON RAMSEY Architects, Inc. creating sustainable timeless design
1003 Charles St.
Beaufort SC, 29902
(843) 986-0559
www.allisonramseyarchitect.com

THIS PLAN HAS BEEN PREPARED TO MEET TYP PROFESSIONAL STANDARDS AND PRACTICES. THE CONTRACTOR SHALL VERIFY ALL DIMENSIONS AND CONDITIONS AND REPORT DISCREPANCIES. IT IS THE RESPONSIBILITY OF THE CONTRACTOR OF THIS PLAN TO ENSURE THAT CLOSING BEFORE BEGINNING CONSTRUCTION, ALLISON RAMSEY ARCHITECTS, INC. ASSUMES NO LIABILITY FOR ANY WORK CONSTRUCTED FROM THIS PLAN.

-VERIFY ALL DIMENSIONS PRIOR TO POSITIONING WITH CONSTRUCTION
-VERIFY STRUCTURAL REQUIREMENTS WITH ENGINEER
-PLANS INDICATE LOCATIONS ONLY, ENGINEERING ASPECTS SHOULD INCORPORATE ACTUAL SITE CONDITIONS.
-FINAL PLUMBING LAYOUTS ARE NOT INCLUDED. THESE SHOULD BE DESIGNED FROM A PLUMBING ENGINEER AND ALL CODES AND REGULATIONS MUST BE FOLLOWED.
AND THAT EQUIPMENT IS SIZED CORRECTLY FOR YOUR PARTICULAR REGION AND CONDITIONS.
-VERIFY ALL STRUCTURAL ELEMENTS WITH LOCAL ENGINEER AND/OR ARCHITECT.

Copyright 2023 by Allison Ramsey Architects, Inc. All rights reserved

DATE: 02/21/2023
JOB NO. 23358
DWN. BY: JM
DWG. NAME: 23358.DWG

0

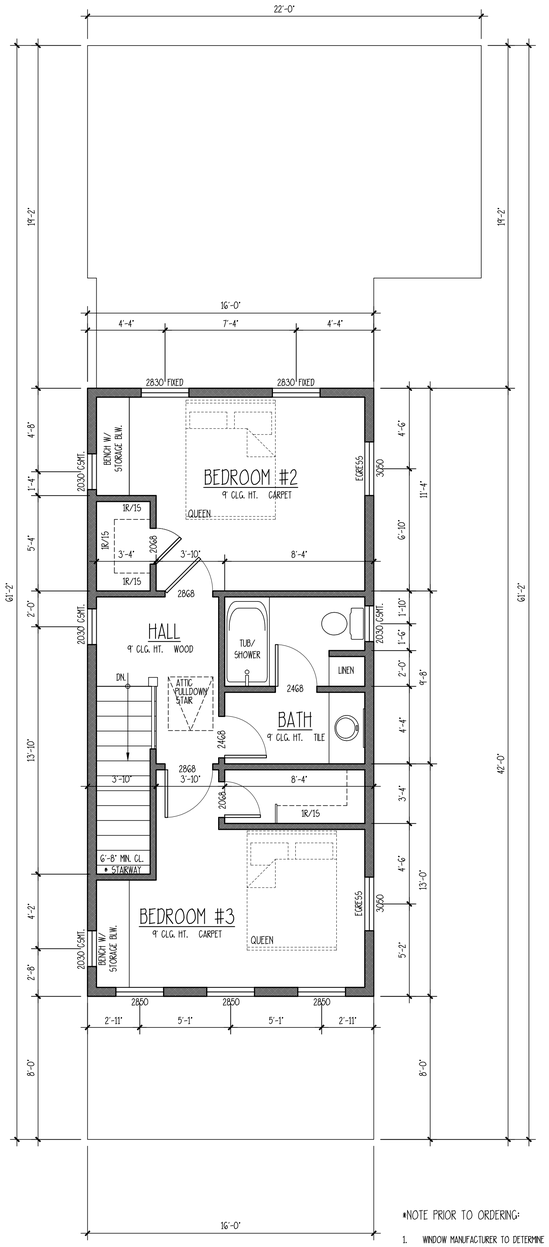

SECOND FLOOR PLAN

*NOTE PRIOR TO ORDERING:

1. WINDOW MANUFACTURER TO DETERMINE AND VERIFY THAT ALL EGRESS WINDOWS ARE IN COMPLIANCE WITH LOCAL CODES.
2. VERIFY LOCATIONS OF REQUIRED SAFETY GLAZING WITH LOCAL CODES.

SCALE: 1/4" = 1'-0"

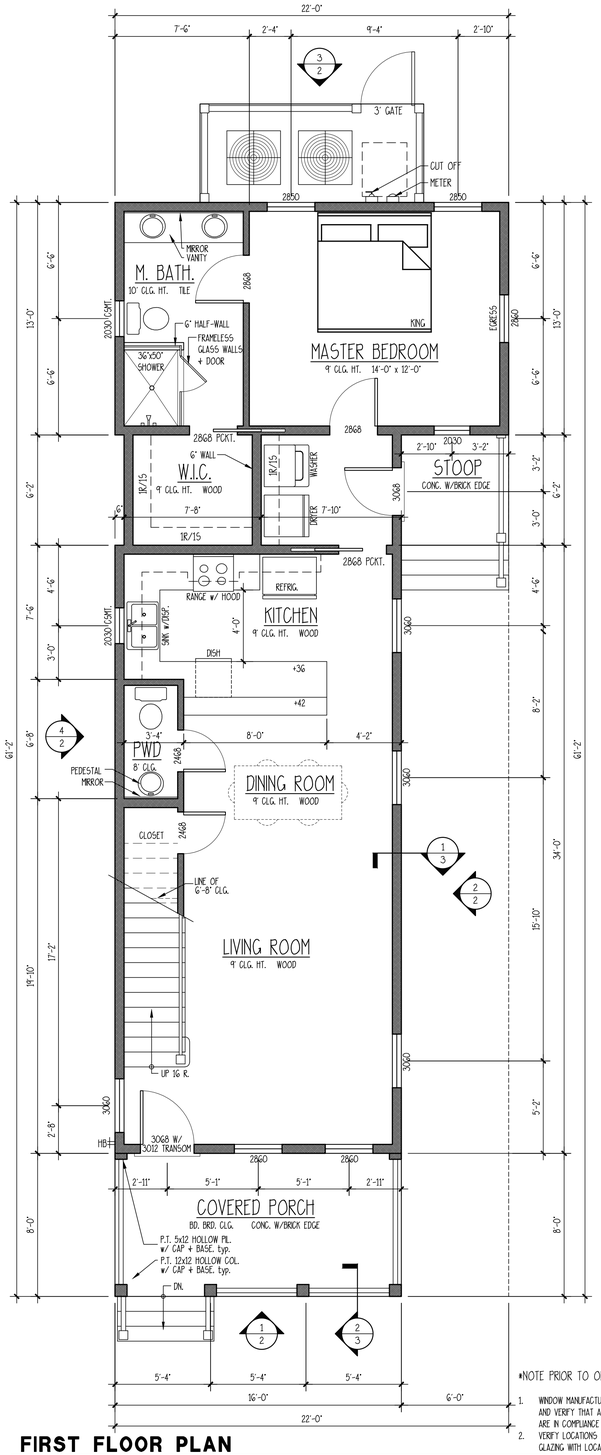

FIRST FLOOR PLAN

*NOTE PRIOR TO ORDERING:

1. WINDOW MANUFACTURER TO DETERMINE AND VERIFY THAT ALL EGRESS WINDOWS ARE IN COMPLIANCE WITH LOCAL CODES.
2. VERIFY LOCATIONS OF REQUIRED SAFETY GLAZING WITH LOCAL CODES.

SCALE: 1/4" = 1'-0"

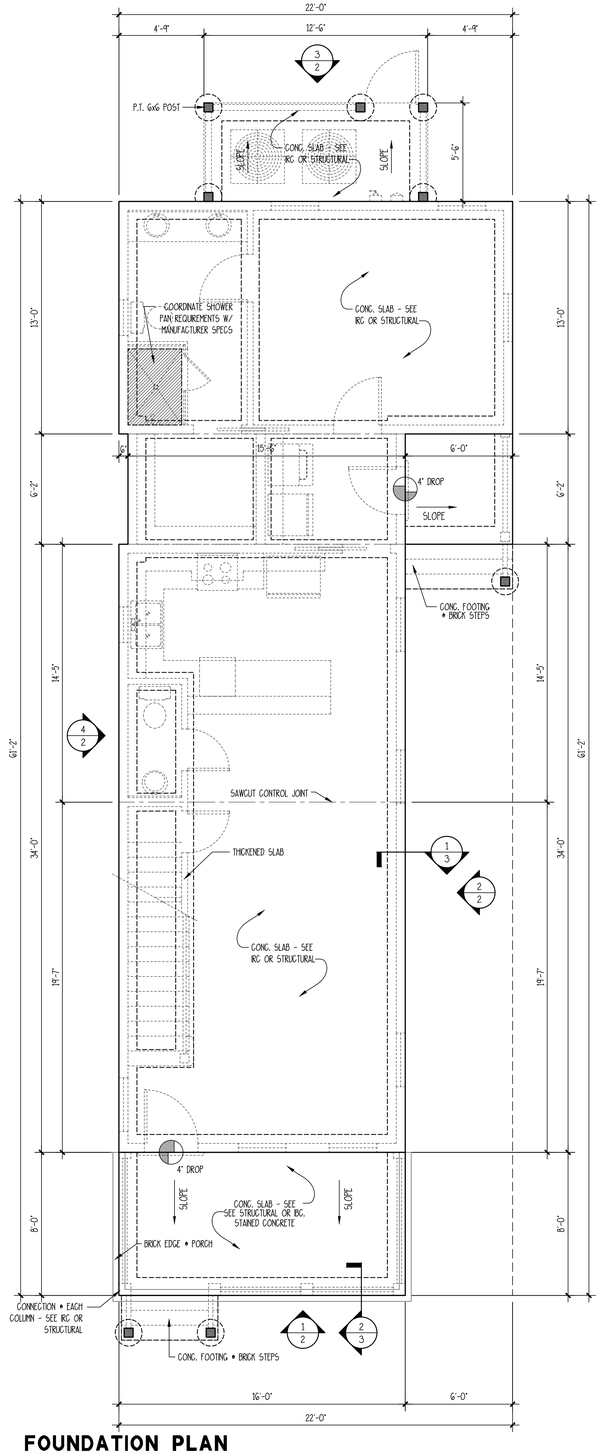

FOUNDATION PLAN

*NOTE: CONTROL JOINTS + THICKENED SLAB TO BE PLACED PER RG OR STRUCTURAL

SCALE: 1/4" = 1'-0"

THE TAYLOR

ALLISON RAMSEY Architects, Inc. creating sustainable timeless design
1003 Charles St.
Beaufort SC, 29902
(843) 986-0559
www.allisonramseyarchitect.com

THIS PLAN WAS PREPARED TO MEET TOP PROFESSIONAL STANDARDS AND PRACTICES. IT IS THE RESPONSIBILITY OF THE PURCHASER OF THIS PLAN TO PERFORM THE FOLLOWING BEFORE BEGINNING CONSTRUCTION. ALLISON RAMSEY ARCHITECTS, INC. ASSUMES NO LIABILITY FOR ANY WORK CONSTRUCTED FROM THIS PLAN.
-VERIFY ALL DIMENSIONS PRIOR TO PROCEEDING WITH CONSTRUCTION
-VERIFY COMPLIANCE WITH ALL LOCAL CODES
-PLANS INDICATE ELEVATIONS ONLY. ENGINEERING ASPECTS SHOULD INCORPORATE ACTUAL SITE CONDITIONS.
-HVAC + PLUMBING LAYOUTS ARE NOT INCLUDED. THESE SHOULD BE OBTAINED FROM A QUALIFIED LOCAL CONTRACTOR OR ENGINEER. ALLISON RAMSEY ARCHITECTS, INC. DOES NOT WARRANT ANY THIS EQUIPMENT IS SIZED CORRECTLY FOR YOUR PARTICULAR REGION AND CONDITIONS.
-VERIFY ALL STRUCTURAL ELEMENTS WITH LOCAL ENGINEER AND/OR ARCHITECT

Copyright 2023 by Allison Ramsey Architects, Inc. All rights reserved.

DATE:	02/21/2023
JOB NO.	223156
DWN. BY:	JW
DWG. NAME:	223156.DWG

1

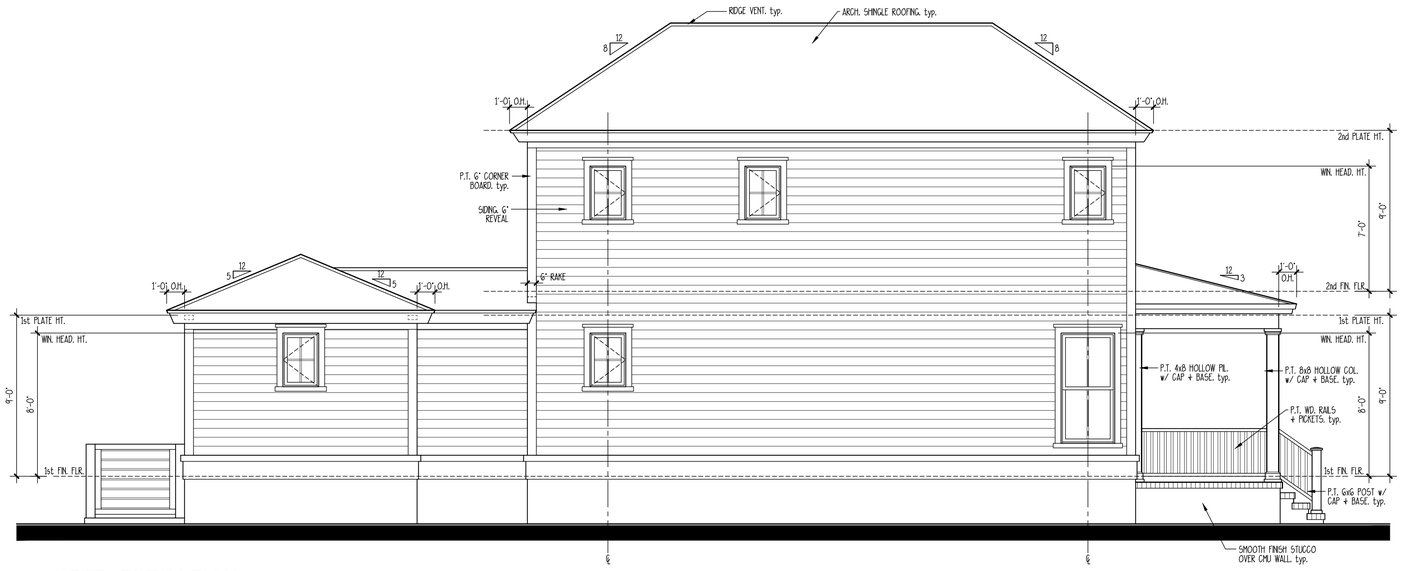

4 LEFT ELEVATION

SCALE: 1/4" = 1'-0"

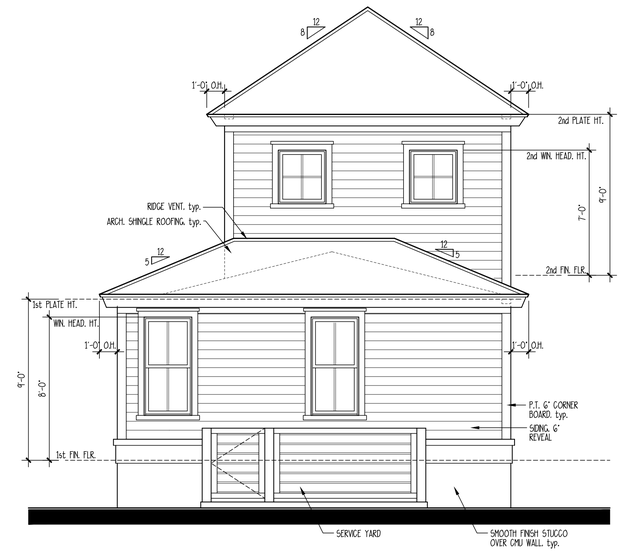

3 REAR ELEVATION

SCALE: 1/4" = 1'-0"

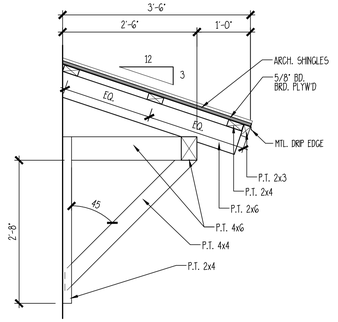

5 TYP. BRACKET DETAIL

SCALE: 3/4" = 1'-0"

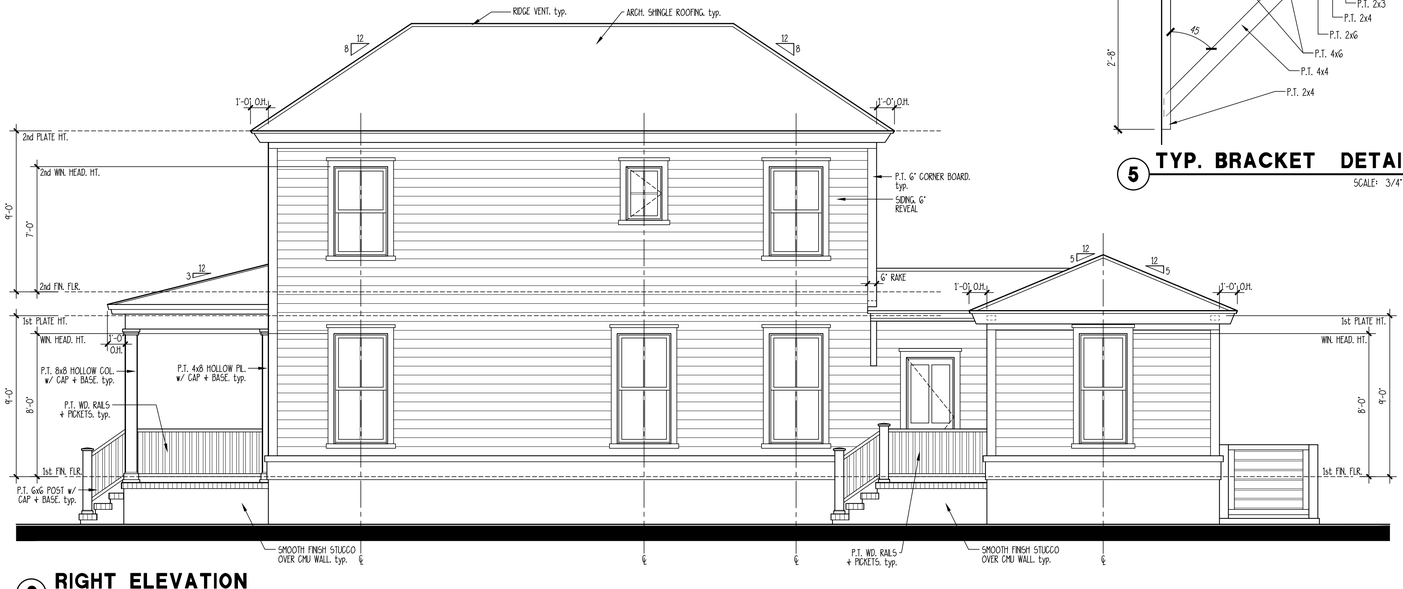

2 RIGHT ELEVATION

SCALE: 1/4" = 1'-0"

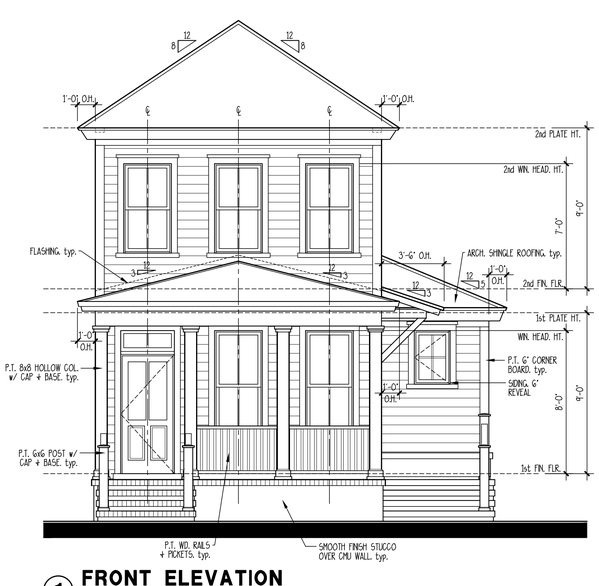

1 FRONT ELEVATION

SCALE: 1/4" = 1'-0"

THE TAYLOR

ALLISON RAMSEY Architects, Inc. creating sustainable timeless design
1003 Charles St.
Beaufort SC, 29902
(843) 986-0559
www.allisonramseyarchitect.com

THIS PLAN HAS BEEN PREPARED TO MEET TOP PROFESSIONAL STANDARDS AND PRACTICES. THE PLANS ARE DRAWN TO SCALE AND ARE ACCURATE TO THE BEST OF OUR KNOWLEDGE. IT IS THE RESPONSIBILITY OF THE PURCHASER OF THIS PLAN TO STUDY AND THE CLOSING BEFORE BEGINNING CONSTRUCTION. ALLISON RAMSEY ARCHITECTS, INC. ASSUMES NO LIABILITY FOR ANY HOME CONSTRUCTED FROM THIS PLAN.

-VERIFY ALL DIMENSIONS PRIOR TO PROCEEDING WITH CONSTRUCTION
-VERIFY ALL EXISTING CONDITIONS AND DIMENSIONS
-PLANS INDICATE LOCATIONS ONLY; ENGINEERING ASPECTS SHOULD BE WORKED OUT AT ACTUAL SITE CONDITIONS.
-FINAL # PLUMBING LOCATIONS ARE NOT INCLUDED. THESE SHOULD BE OBTAINED FROM A PLUMBING CONTRACTOR OR SUPPLIER. THE CONTRACTOR SHALL VERIFY ALL FIXTURES AND THEIR EQUIPMENT'S SIZES CORRECTLY FOR THEIR PARTICULAR DESIGN AND CONDITIONS.
-VERIFY ALL STRUCTURAL ELEMENTS WITH LOCAL ENGINEER AND/OR ARCHITECT.

DATE:	02/21/2023
JOB NO.	223156
DWN. BY:	JW
DWG. NAME:	223156.DWG

Copyright 2023 by Allison Ramsey Architects, Inc. All rights reserved.

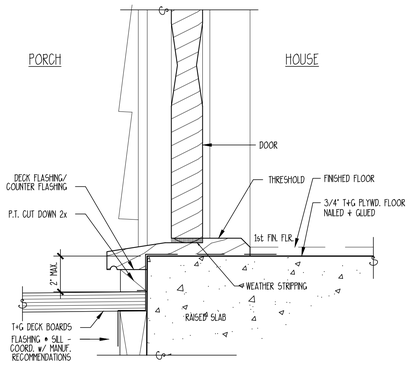

12 TYPICAL EXTERIOR DOOR SILL

SCALE: 3" = 1'-0"

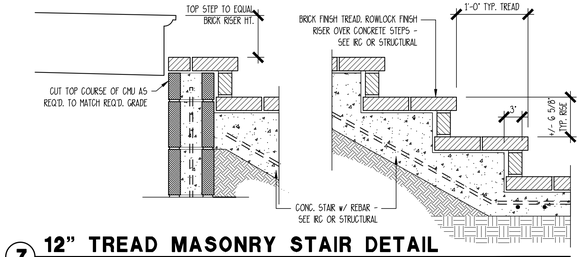

7 12" TREAD MASONRY STAIR DETAIL

SCALE: 1" = 1'-0"

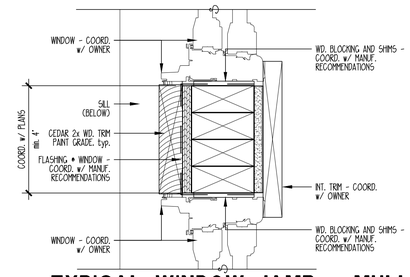

11 TYPICAL WINDOW JAMB @ MULL

SCALE: 3" = 1'-0"

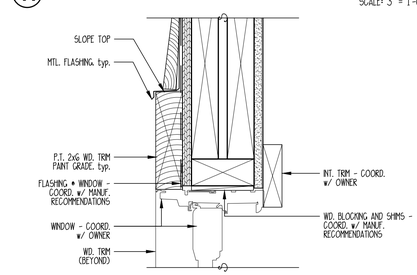

10 TYPICAL WINDOW & DOOR HEAD

SCALE: 3" = 1'-0"

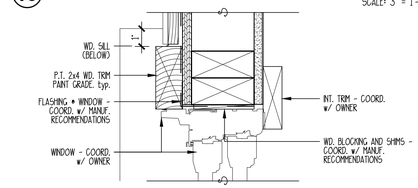

9 TYPICAL WINDOW & DOOR JAMB

SCALE: 3" = 1'-0"

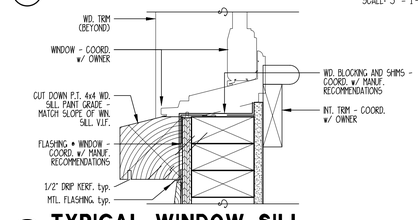

8 TYPICAL WINDOW SILL

SCALE: 3" = 1'-0"

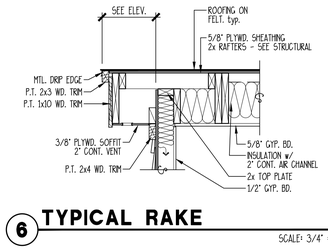

6 TYPICAL RAKE

SCALE: 3/4" = 1'-0"

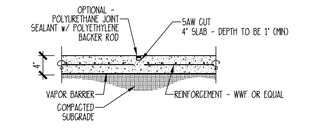

5 CONTROL JOINT DETAIL

SCALE: 3/4" = 1'-0"

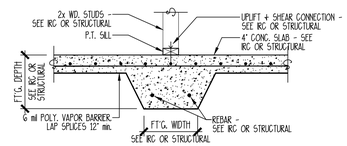

4 THICKENED SLAB DETAIL

NOT TO SCALE

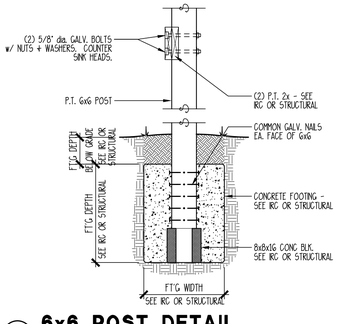

3 6x6 POST DETAIL

SCALE: 3/4" = 1'-0"

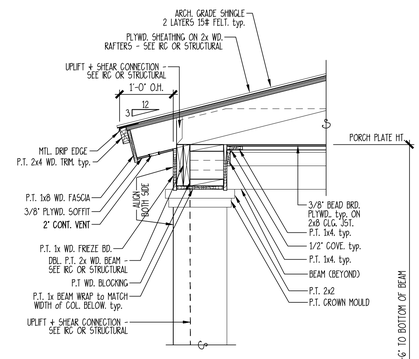

2 TYPICAL WALL SECTION

SCALE: 3/4" = 1'-0"

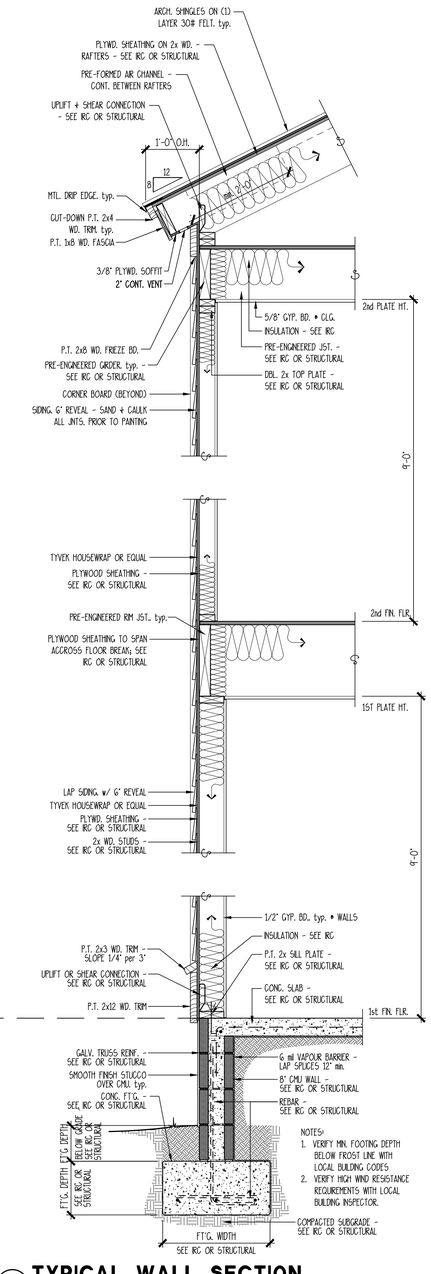

1 TYPICAL WALL SECTION

SCALE: 3/4" = 1'-0"

THE TAYLOR

ALLISON RAMSEY Architects, Inc. creating sustainable timeless design
1003 Charles St.
Beaufort SC, 29902
(843) 986-0559
www.allisonramseyarchitect.com

THIS PLAN WAS DRAFTED TO MEET CURRENT PROFESSIONAL STANDARDS AND PRACTICES. IT IS THE RESPONSIBILITY OF THE ENGINEER OF THIS PLAN TO CERTIFY THE DESIGN AND CONSTRUCTION BEFORE BEGINNING CONSTRUCTION. ALLISON RAMSEY ARCHITECTS, INC. ASSUMES NO LIABILITY FOR ANY ITEMS CONSTRUCTED FROM THIS PLAN.

-VERIFY ALL DIMENSIONS PRIOR TO PROCEEDING WITH CONSTRUCTION
-VERIFY ALL SITE CONDITIONS PRIOR TO CONSTRUCTION
-PLANS INDICATE LOCATIONS ONLY; ENGINEERING ASPECTS SHOULD INCORPORATE ACTUAL SITE CONDITIONS.
-PRICE 4 FRAMING LISTINGS ARE NOT INCLUDED. PRICE SHOULD BE OBTAINED FROM A LOCAL FRAMING CONTRACTOR. ALL FRAMING SHALL BE IN ACCORDANCE WITH LOCAL CODES AND THAT EQUIPMENT TO SECURE CONNECTS FOR EVEN IRREGULAR WEIGHT AND CONDITIONS.
-VERIFY ALL STRUCTURAL ELEMENTS WITH LOCAL ENGINEER AND/OR ARCHITECT.

DATE:	02/21/2023
JOB NO.	223158
DWN. BY:	JM
DWG. NAME:	223158.DWG

Copyright 2023 by Allison Ramsey Architects, Inc. All rights reserved.

SYMBOLS + KEYS

DOOR AND WINDOW SIZE KEY
2860 = 2'-8" WIDE x 6'-0" HIGH

DRAWING NUMBER
SHEET NUMBER
= SECTION OR ELEVATION

ROOM TITLE
KITCHEN
10' CLG. WOOD
CEILING HEIGHT
FLOOR FINISH

1 **DRAWING TITLE**
DETAIL OR ELEVATION NUMBER

14.00' = ELEVATION ABOVE SEA LEVEL
= REVISION NUMBER
= REVISION CLOUD
= PLAN REFERENCE NORTH

REF. N

	SINGLE POLE SWITCH
3	THREE WAY SWITCH
4	FOUR WAY SWITCH
D	DIMMER SWITCH
SC	SPEED CONTROL
	DUPLEX OUTLET
	1/2 HOT OUTLET
WP	WATER PROOF OUTLET
GF	GROUND FAULT OUTLET
	QUADRUPLEX OUTLET
	SPECIALTY OUTLET
	FLOOR OUTLET
	TELEPHONE JACK
T	THERMOSTAT
TV	TELEVISION JACK
V	VENT
V/L	VENT w/ LIGHT
	SURFACE MOUNTED FIXTURE
	RECESSED FIXTURE
	WALL MOUNTED FIXTURE
	FLOOD LIGHT
	LED FIXTURE
	CEILING FAN
	STRIP LIGHTING
	CEILING BOX
	DOOR CHIME
	ELECTRICAL PANEL
S	SMOKE DETECTOR
CO	CARBON MONOXIDE DETECTOR



CONCEPTUAL RENDERING

DRAWING INDEX

0	COVER SHEET
1	FOUNDATION/ FLOOR PLANS
2	ELEVATIONS
3	SECTIONS/ DETAILS
4	ELECTRICAL LAYOUTS/ ROOF PLAN
SP1	SPECIFICATIONS
SP2	SPECIFICATIONS
SP3	SPECIFICATIONS

GENERAL INFO.

AREA CALCULATIONS

FIRST FLOOR HEATED = 922 S.F.
SECOND FLOOR HEATED = 494 S.F.
TOTAL HEATED = 1416 S.F.
STOOP = 14 S.F.
COVERED PORCH = 120 S.F.

23408 - THE TAYLOR II

THE TAYLOR II

ALLISON RAMSEY Architects Inc. creating sustainable timeless design
1003 Charles St.
Beaufort SC, 29902
(843) 986-0559
www.allisonramseyarchitect.com

THIS PLAN HAS BEEN REVIEWED TO MEET TOP PROFESSIONAL STANDARDS AND PRACTICES. HOWEVER, BUILDING CODES AND ENVIRONMENTAL CONDITIONS VARY FOR DIFFERENT LOCATIONS. IT IS THE RESPONSIBILITY OF THE PURCHASER OF THIS PLAN TO PERFORM THE FOLLOWING BEFORE BEGINNING CONSTRUCTION. ALLISON RAMSEY ARCHITECTS, INC. ASSUMES NO LIABILITY FOR ANY HOME CONSTRUCTED FROM THIS PLAN.

-VERIFY ALL DIMENSIONS PRIOR TO PROCEEDING WITH CONSTRUCTION
-VERIFY COMPLIANCE WITH ALL LOCAL CODES
-PLANS INDICATE LOCATIONS ONLY, ENGINEERING ASPECTS SHOULD INCORPORATE ACTUAL SITE CONDITIONS.
-FINAL + PLUMBING LAYOUTS ARE NOT INCLUDED. THESE SHOULD BE OBTAINED FROM A LOCAL PLUMBING CONTRACTOR OR ENGINEER TO ENSURE COMPLIANCE WITH LOCAL CODE AND THAT EQUIPMENT IS SIZED CORRECTLY FOR YOUR PARTICULAR REGION AND CONDITIONS.
-VERIFY ALL STRUCTURAL ELEMENTS WITH LOCAL ENGINEER AND/OR ARCHITECT.

Copyright 2023 by Allison Ramsey Architects, Inc. All rights reserved.

DATE:	02/21/2023
JOB NO.	223158
DWN. BY:	JW
DWG. NAME:	223158.DWG

0

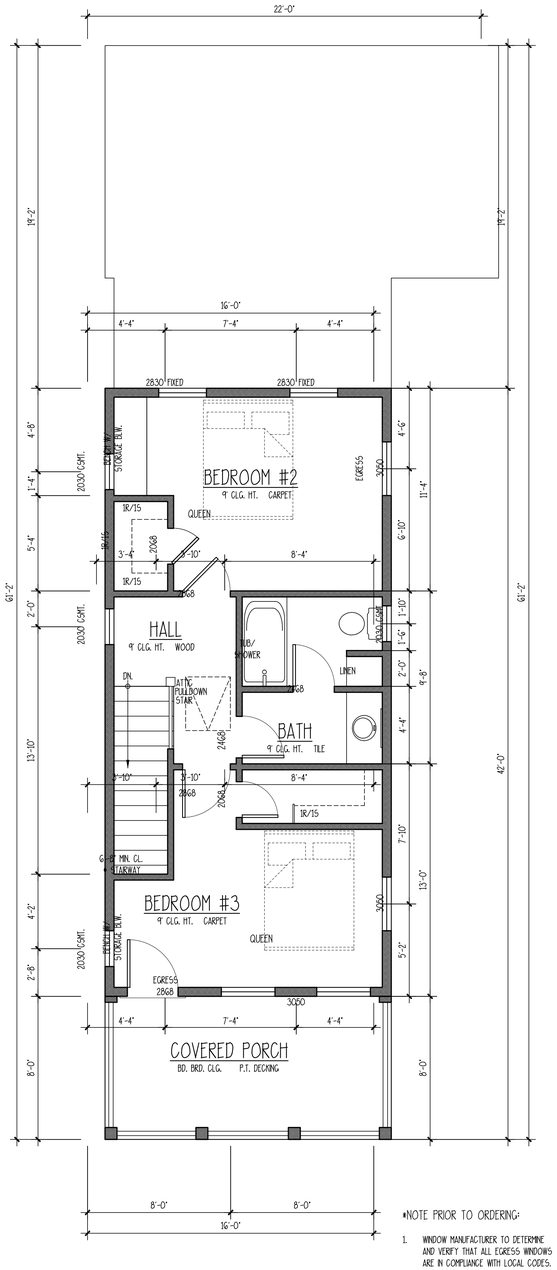

*NOTE PRIOR TO ORDERING:

1. WINDOW MANUFACTURER TO DETERMINE AND VERIFY THAT ALL EGRESS WINDOWS ARE IN COMPLIANCE WITH LOCAL CODES.
2. VERIFY LOCATIONS OF REQUIRED SAFETY GLAZING WITH LOCAL CODES.

SECOND FLOOR PLAN

SCALE: 1/4" = 1'-0"

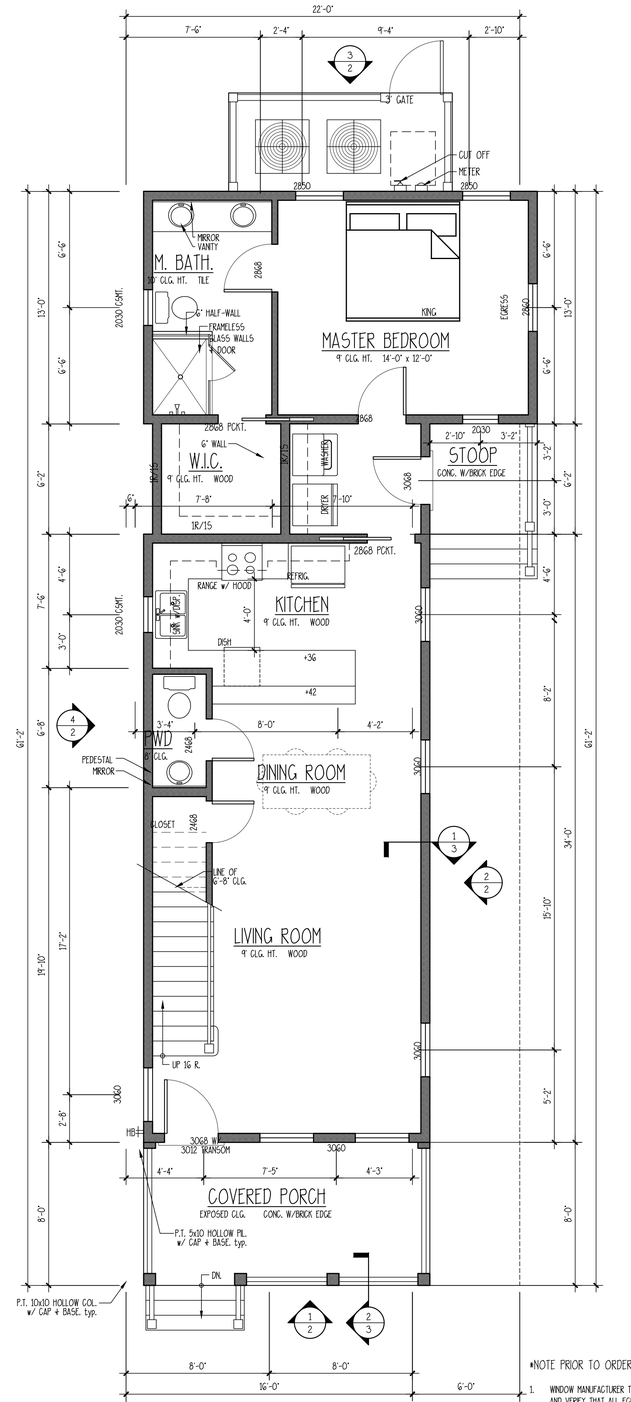

*NOTE PRIOR TO ORDERING:

1. WINDOW MANUFACTURER TO DETERMINE AND VERIFY THAT ALL EGRESS WINDOWS ARE IN COMPLIANCE WITH LOCAL CODES.
2. VERIFY LOCATIONS OF REQUIRED SAFETY GLAZING WITH LOCAL CODES.

FIRST FLOOR PLAN

SCALE: 1/4" = 1'-0"

THE TAYLOR II

ALLISON RAMSEY Architects Inc. creating sustainable timeless design
1003 Charles St.
Beaufort SC, 29902
(843) 986-0559
www.allisonramseyarchitect.com

THIS PLAN HAS BEEN PREPARED TO MEET COMPREHENSIVE STANDARDS AND PRACTICES. HOWEVER, BUILDING CODES AND ENVIRONMENTAL CONDITIONS ARE FOR EVERYTHING LOCATIONS. IT IS THE RESPONSIBILITY OF THE PURCHASER OF THIS PLAN TO PERFORM THE FOLLOWING BEFORE BEGINNING CONSTRUCTION. ALLISON RAMSEY ARCHITECTS, INC. ASSUMES NO LIABILITY FOR ANY HOME CONSTRUCTED FROM THIS PLAN.

-VERIFY ALL DIMENSIONS PRIOR TO PROCEEDING WITH CONSTRUCTION
-VERIFY COMPLIANCE WITH ALL LOCAL CODES
-PLANS INDICATE LOCATIONS ONLY, ENGINEERING ASPECTS SHOULD INCORPORATE ACTUAL SITE CONDITIONS.
-PLUMBING & PLUMBING LAYOUTS ARE NOT INCLUDED. THESE SHOULD BE OBTAINED FROM A LOCAL HEIGHT CONTRACTOR OR ENGINEER TO ENSURE COMPLIANCE WITH LOCAL CODE AND THAT EQUIPMENT IS SIZED CORRECTLY FOR YOUR PARTICULAR REGION AND CONDITIONS.
-VERIFY ALL STRUCTURAL ELEMENTS WITH LOCAL ENGINEER AND/OR ARCHITECT.

DATE:	02/21/2023
JOB NO.	223158
DWN. BY:	JW
DWG. NAME:	223158.DWG

Copyright 2023 by Allison Ramsey Architects, Inc. All rights reserved.

1

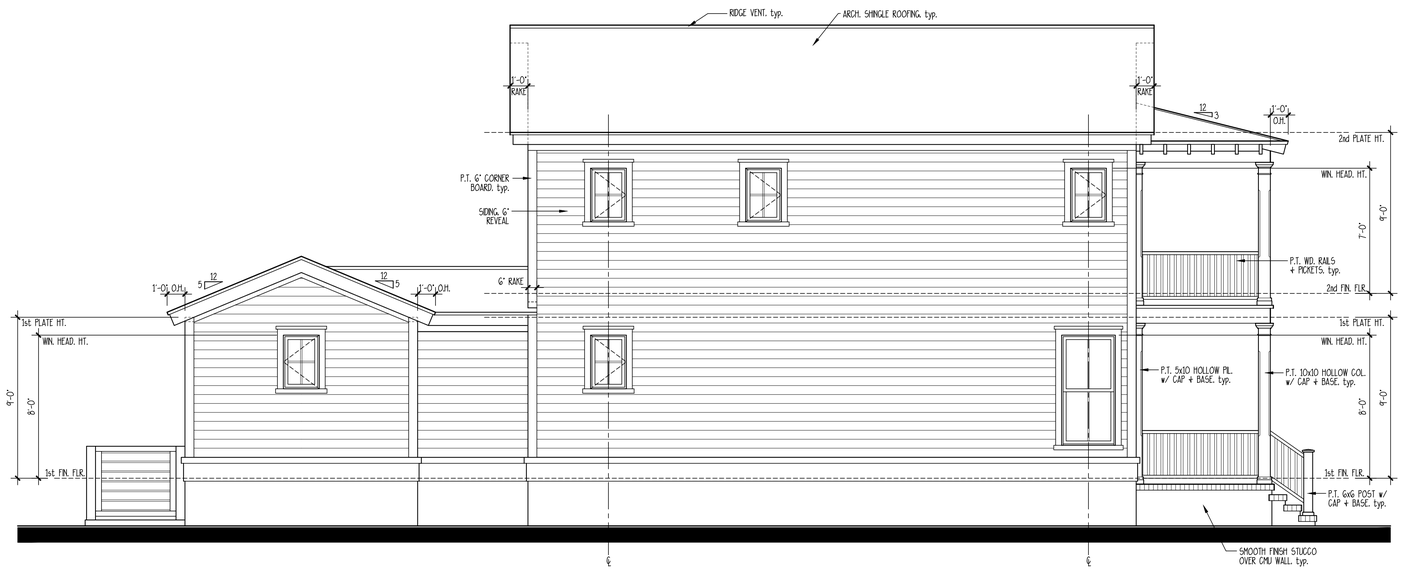

4 RIGHT ELEVATION

SCALE: 1/4" = 1'-0"

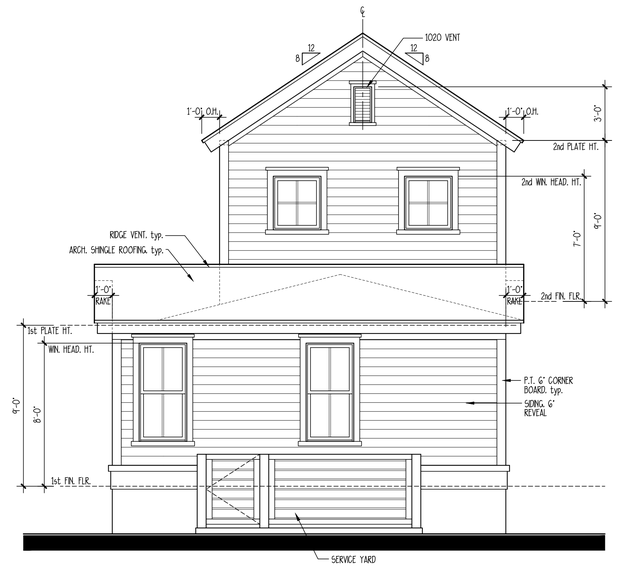

3 REAR ELEVATION

SCALE: 1/4" = 1'-0"

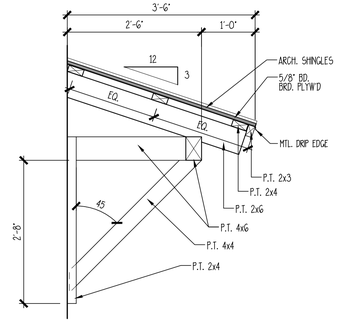

5 TYP. BRACKET DETAIL

SCALE: 3/4" = 1'-0"

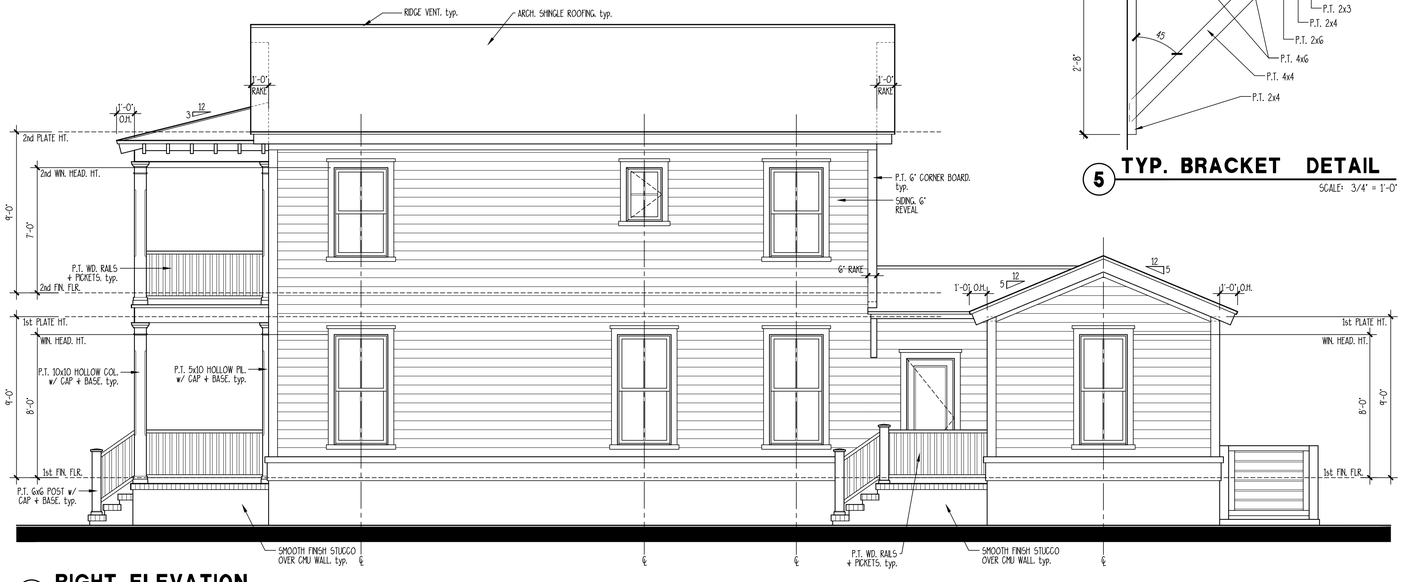

2 RIGHT ELEVATION

SCALE: 1/4" = 1'-0"

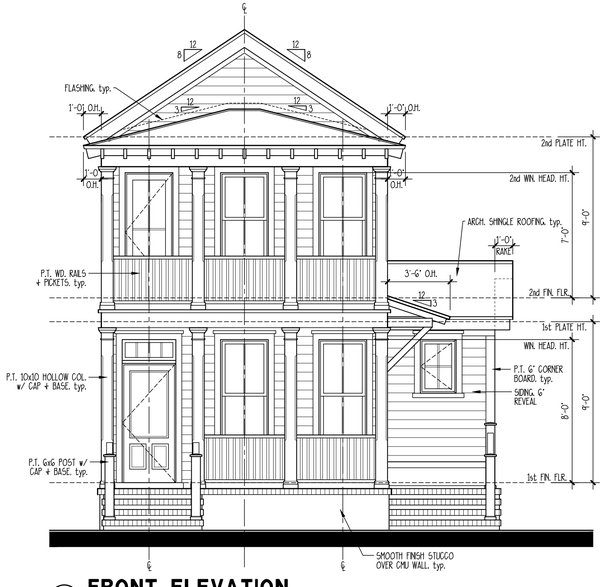

1 FRONT ELEVATION

SCALE: 1/4" = 1'-0"

THE TAYLOR II

ALLISON RAMSEY Architects, INC. creating sustainable timeless design
1003 Charles St.
Beaufort SC, 29902
(843) 986-0559
www.allisonramseyarchitect.com

THIS PLAN HAS BEEN PREPARED TO MEET CUP PROFESSIONAL STANDARDS AND PRACTICES. HOWEVER, IT IS THE RESPONSIBILITY OF THE CONTRACTOR TO REVIEW ALL PLANS AND DETAILS BEFORE BEGINNING CONSTRUCTION. ALLISON RAMSEY ARCHITECTS, INC. ASSUMES NO LIABILITY FOR ANY WORK CONSTRUCTED FROM THIS PLAN.
-VERIFY ALL DIMENSIONS PRIOR TO FABRICATING ANY CONSTRUCTION
-PLANS INDICATE LOCATIONS ONLY, EXPERIENCED CRAFTSPERSONS SHOULD INCORPORATE ACTUAL SITE CONDITIONS.
-PLANS INDICATE LOCATIONS ARE NOT INCLUDED. THESE SHOULD BE OBTAINED FROM A LICENSED MECHANICAL ENGINEER OR EQUIPMENT SUPPLIER. ALLOW SPACE FOR ALL EQUIPMENT AND THAT EQUIPMENT IS SIZED CORRECTLY FOR YOUR PARTICULAR DESIGN AND CONDITIONS.
-VERIFY ALL STRUCTURAL ELEMENTS WITH LOCAL ENGINEER AND/OR ARCHITECT.

DATE:	02/21/2023
JOB NO.	223156
DWN. BY:	JW
DWG. NAME:	223156.DWG

Copyright 2023 by Allison Ramsey Architects, Inc. All rights reserved.

2

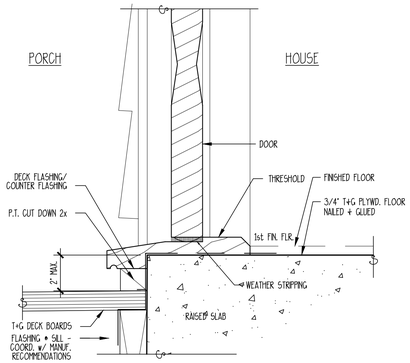

12 TYPICAL EXTERIOR DOOR SILL

SCALE: 3" = 1'-0"

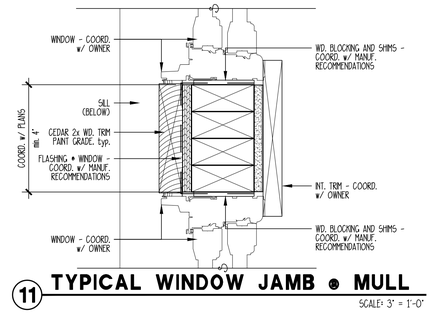

11 TYPICAL WINDOW JAMB @ MULL

SCALE: 3" = 1'-0"

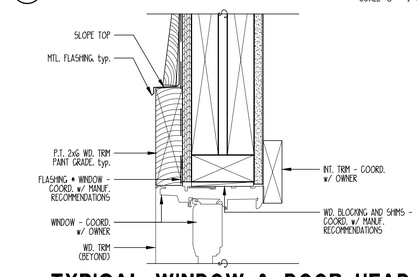

10 TYPICAL WINDOW & DOOR HEAD

SCALE: 3" = 1'-0"

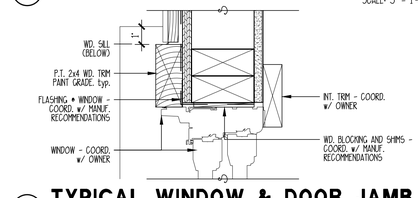

9 TYPICAL WINDOW & DOOR JAMB

SCALE: 3" = 1'-0"

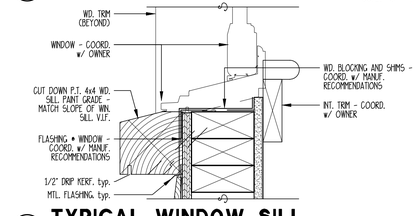

8 TYPICAL WINDOW SILL

SCALE: 3" = 1'-0"

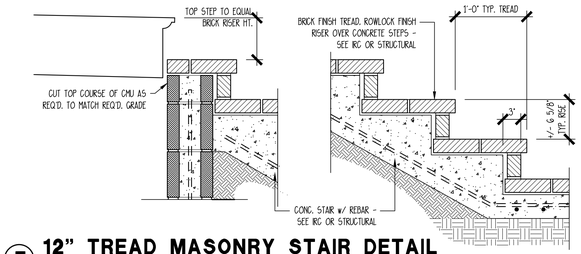

7 12" TREAD MASONRY STAIR DETAIL

SCALE: 1" = 1'-0"

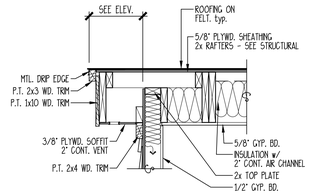

6 TYPICAL RAKE

SCALE: 3/4" = 1'-0"

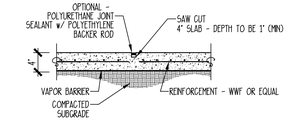

5 CONTROL JOINT DETAIL

SCALE: 3/4" = 1'-0"

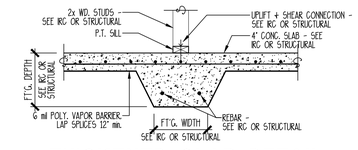

4 THICKENED SLAB DETAIL

NOT TO SCALE

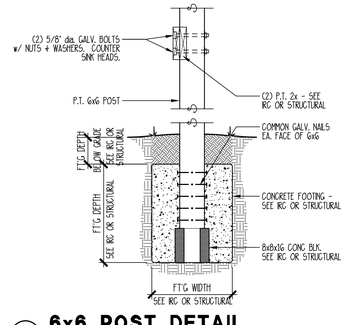

3 6x6 POST DETAIL

SCALE: 3/4" = 1'-0"

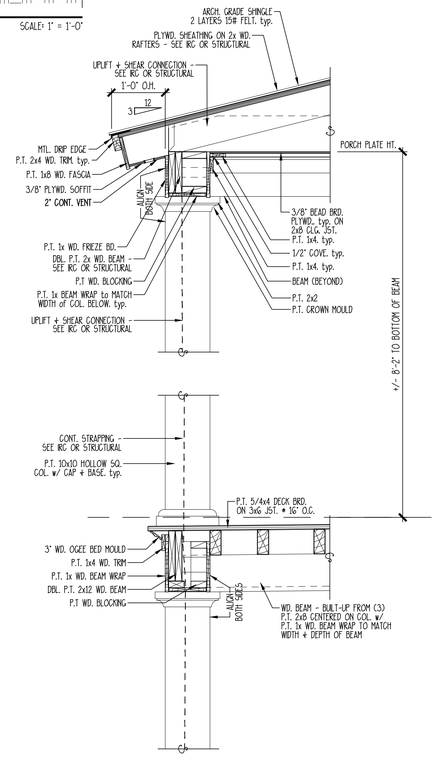

2 TYPICAL WALL SECTION

SCALE: 3/4" = 1'-0"

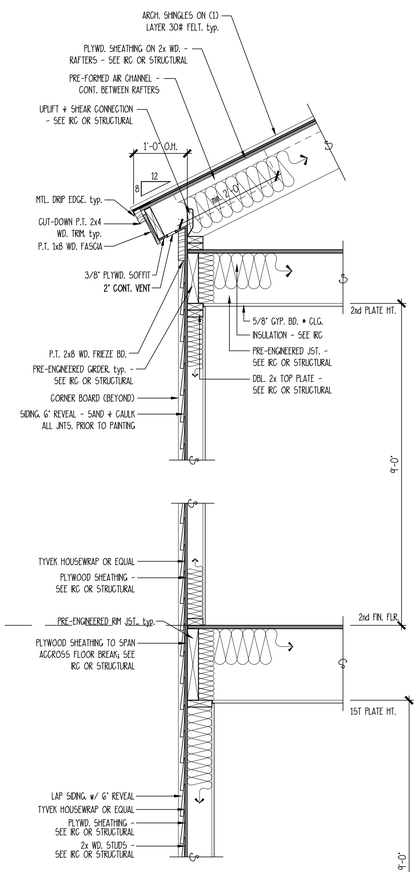

1 TYPICAL WALL SECTION

SCALE: 3/4" = 1'-0"

THE TAYLOR II

ALLISON RAMSEY Architects, Inc. creating sustainable timeless design
1003 Charles St.
Beaufort SC, 29902
(843) 986-0559
www.allisonramseyarchitect.com

THIS PLAN WAS PREPARED TO MEET TOP PROFESSIONAL STANDARDS AND PRACTICES. IT IS THE RESPONSIBILITY OF THE PURCHASER OF THIS PLAN TO PERFORM THE FOLLOWING BEFORE BEGINNING CONSTRUCTION. ALLISON RAMSEY ARCHITECTS, INC. ASSUMES NO LIABILITY FOR ANY WORK CONSTRUCTED FROM THIS PLAN.

- VERIFY ALL DIMENSIONS PRIOR TO CONSTRUCTION.
- VERIFY ALL CONDITIONS AND DIMENSIONS.
- PLANS INDICATE ELEVATIONS ONLY. ENGINEERING ASPECTS SHOULD INCORPORATE ACTUAL SITE CONDITIONS.
- HVAC + PLUMBING LAYOUTS ARE NOT INCLUDED. THESE SHOULD BE OBTAINED FROM A LICENSED CONTRACTOR. ALL MECHANICAL EQUIPMENT SHOULD BE SIZED CORRECTLY FOR YOUR PARTICULAR DESIGN AND CONDITIONS.
- VERIFY ALL STRUCTURAL ELEMENTS WITH LOCAL ENGINEER AND/OR ARCHITECT.

DATE:	02/21/2023
JOB NO.	223156
DWN. BY:	JW
DWG. NAME:	223156.DWG

Copyright 2023 by Allison Ramsey Architects, Inc. All rights reserved.

SYMBOLS + KEYS

DOOR AND WINDOW SIZE KEY
2860 = 2'-8" WIDE x 6'-0" HIGH

DRAWING # / SHEET # = SECTION OF ELEVATION

KITCHEN — ROOM TITLE
9' CLG. VINYL
CEILING HEIGHT — FLOOR FINISH

1 DRAWING TITLE
DETAIL OR ELEVATION NUMBER

14.00' = ELEVATION ABOVE SEA LEVEL

= REVISION NUMBER

= REVISION CLOUD

REF. N = PLAN REFERENCE NORTH

	SINGLE POLE SWITCH
	THREE WAY SWITCH
	FOUR WAY SWITCH
	DIMMER SWITCH
	DUPLEX OUTLET
WP	WATER PROOF OUTLET
GF	GROUND FAULT OUTLET
	SPECIALTY OUTLET
	FLOOR OUTLET
	TELEPHONE JACK
	TELEVISION JACK
V	VENT
V/L	VENT W/ LIGHT
	SURFACE MOUNTED FIXTURE
	RECESSED FIXTURE
	WALL MOUNTED FIXTURE
	FLOOD LIGHT
	FLOURESCENT FIXTURE
	CEILING FAN
	STRIP LIGHTING
	CEILING BOX
	DOOR CHIME
	ELECTRICAL PANEL
	SMOKE ALARM



CONCEPTUAL RENDERING

DRAWING INDEX

0	COVER SHEET
1	PLANS
2	ELEVATIONS
3	DETAILS
4	ELECTRICAL PLAN
SP1	SPECIFICATIONS
SP2	SPECIFICATIONS
SP3	SPECIFICATIONS

GENERAL INFO.

AREA CALCULATIONS
1st FLOOR HEATED = 640 S.F.
2nd FLOOR HEATED = 586 S.F.
TOTAL HEATED = 1226 S.F.

23408 - ALLENDALE II

ALLENDALE II

ALLISON RAMSEY Architects Inc. creating sustainable timeless design
1003 Charles St. | Suite 515, Battery Park Ave.
Beaufort SC, 29902 | Asheville, NC 28801
(843) 986-0559 | (828) 350-1266
www.allisonramseyarchitect.com

THIS PLAN HAS BEEN PREPARED TO MEET TOP PROFESSIONAL STANDARDS AND PRACTICES. HOWEVER, BUILDING CODES AND ENVIRONMENTAL CONDITIONS VARY FOR DIFFERENT LOCATIONS. IT IS THE RESPONSIBILITY OF THE PURCHASER OF THIS PLAN TO PERFORM THE FOLLOWING BEFORE BEGINNING CONSTRUCTION. ALLISON RAMSEY ARCHITECTS, INC. ASSUMES NO LIABILITY FOR ANY HOME CONSTRUCTED FROM THIS PLAN.

-VERIFY ALL DIMENSIONS PRIOR TO PROCEEDING WITH CONSTRUCTION
-VERIFY COMPLIANCE WITH ALL LOCAL CODES
-PLANS INDICATE LOCATIONS ONLY; ENGINEERING ASPECTS SHOULD INCORPORATE ACTUAL SITE CONDITIONS.
-HVAC & PLUMBING LAYOUTS ARE NOT INCLUDED. THESE SHOULD BE OBTAINED FROM A LOCAL MECH. CONTRACTOR OR ENGINEER TO ENSURE COMPLIANCE WITH LOCAL CODE AND THAT EQUIPMENT IS SIZED CORRECTLY FOR YOUR PARTICULAR REGION AND CONDITIONS.
-VERIFY ALL STRUCTURAL ELEMENTS WITH LOCAL ENGINEER AND/OR ARCHITECT.

DATE :	02/22/2010
JOB NO. :	09412
DWN. BY :	MJS
DWG. NAME :	09412-Allendale 2.dwg

Copyright © 2010 by Allison Ramsey Architects, Inc. All rights reserved.

0

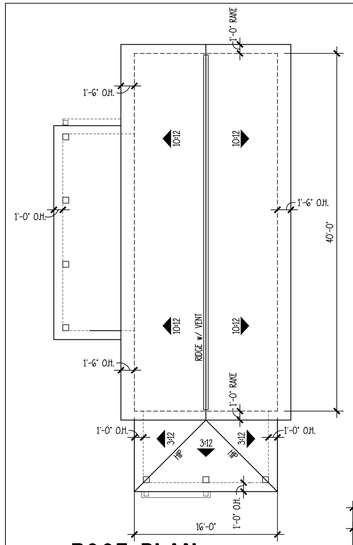

ROOF PLAN

SCALE: 1/8" = 1'-0"

*NOTE: EXHAUST VENTS (PLUMBING OR OTHERWISE) NEED TO BE LOCATED AS INCONSPICUOUSLY AS POSSIBLE. ROOF PENETRATIONS NEED TO BE KEPT TO A MINIMUM. (COMBINED WHEN POSSIBLE) ROOF / WALL PENETRATIONS MUST BE PAINTED TO MATCH SURROUNDING COLOR.

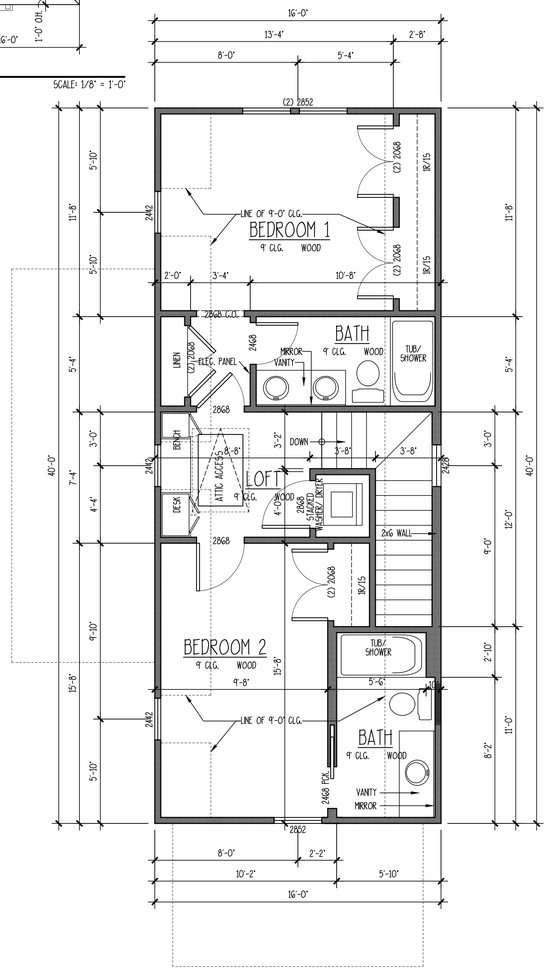

SECOND FLOOR PLAN

SCALE: 1/4" = 1'-0"

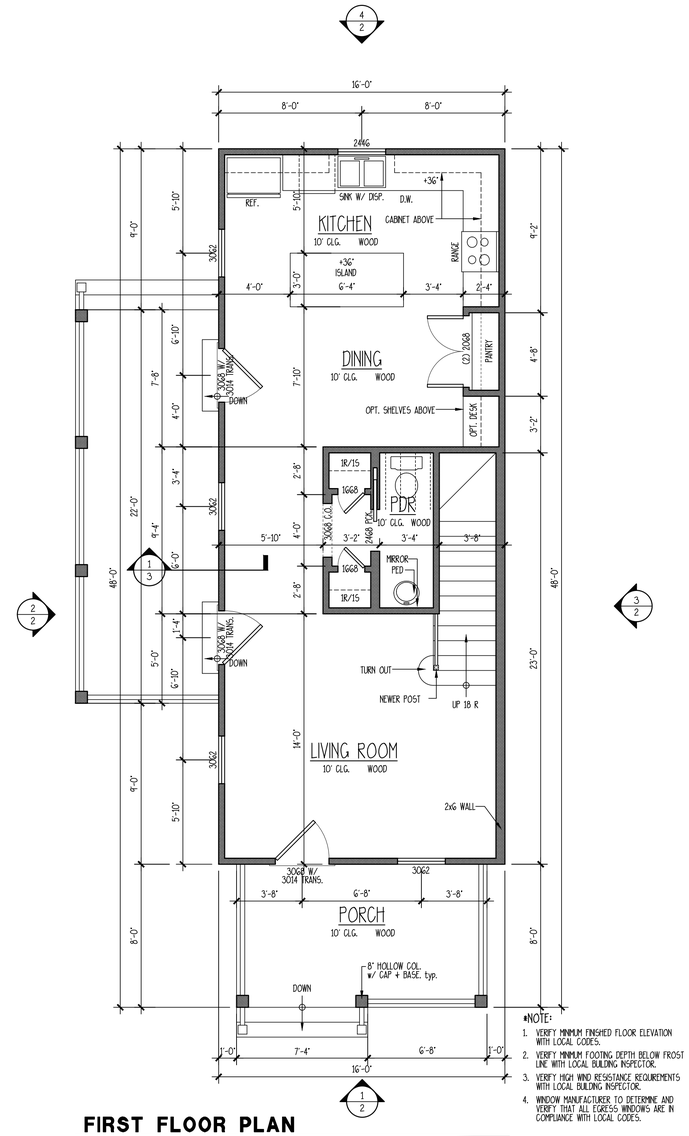

*NOTE:
1. VERIFY MINIMUM FINISHED FLOOR ELEVATION WITH LOCAL CODES.
2. VERIFY MINIMUM FOOTING DEPTH BELOW FROST LINE WITH LOCAL BUILDING INSPECTOR.
3. VERIFY HIGH WIND RESISTANCE REQUIREMENTS WITH LOCAL BUILDING INSPECTOR.
4. WINDOW MANUFACTURER TO DETERMINE AND VERIFY THAT ALL EGRESS WINDOWS ARE IN COMPLIANCE WITH LOCAL CODES.

FIRST FLOOR PLAN

SCALE: 1/4" = 1'-0"

ALLENDALE 2

ALLISON RAMSEY Architects, inc. creating sustainable timeless design
1003 Charles St. | Suite 515, Battery Park Ave.
Beaufort SC, 29902 | Asheville, NC 28801
(843) 986-0539 | (828) 350-1266
www.allisonramseyarchitect.com

THIS PLAN HAS BEEN PREPARED TO MEET TOP PROFESSIONAL STANDARDS AND PRACTICES. HOWEVER, BUILDING CODES AND ENVIRONMENTAL CONDITIONS VARY FOR DIFFERENT LOCATIONS. IT IS THE RESPONSIBILITY OF THE PURCHASER OF THIS PLAN TO PERFORM THE FOLLOWING BEFORE CONSTRUCTION BEGINS. ALLISON RAMSEY ARCHITECTS, INC. ASSUMES NO LIABILITY FOR ANY HOME CONSTRUCTED FROM THIS PLAN.
-VERIFY ALL DIMENSIONS PRIOR TO PROCEEDING WITH CONSTRUCTION
-VERIFY COMPLIANCE WITH ALL LOCAL CODES
-FLOOD ZONE LOCATIONS ONLY; ENGINEERING ASPECTS SHOULD INCORPORATE ALL LOCAL REQUIREMENTS
-HVAC + PLUMBING LAYOUTS ARE NOT INCLUDED. THESE SHOULD BE OBTAINED FROM A LOCAL MECH. CONTRACTOR OR ENGINEER TO ENSURE COMPLIANCE WITH LOCAL CODE
-SITE PLAN SHOULD BE DESIGNED TO ACCOMMODATE LOCAL SETBACKS AND OTHER CONDITIONS.
-VERIFY ALL STRUCTURAL ELEMENTS WITH LOCAL ENGINEER AND/OR ARCHITECT.

DATE :	02/22/2010
JOB NO. :	0912
DWN. BY :	MJS
DWG. NAME :	0912-Allendale 2.dwg

Copyright © 2010 by Allison Ramsey Architects, Inc. All rights reserved.

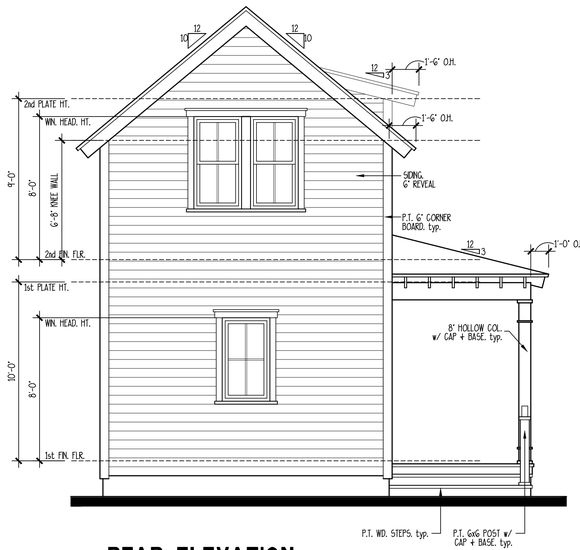

4 REAR ELEVATION

SCALE: 1/4" = 1'-0"

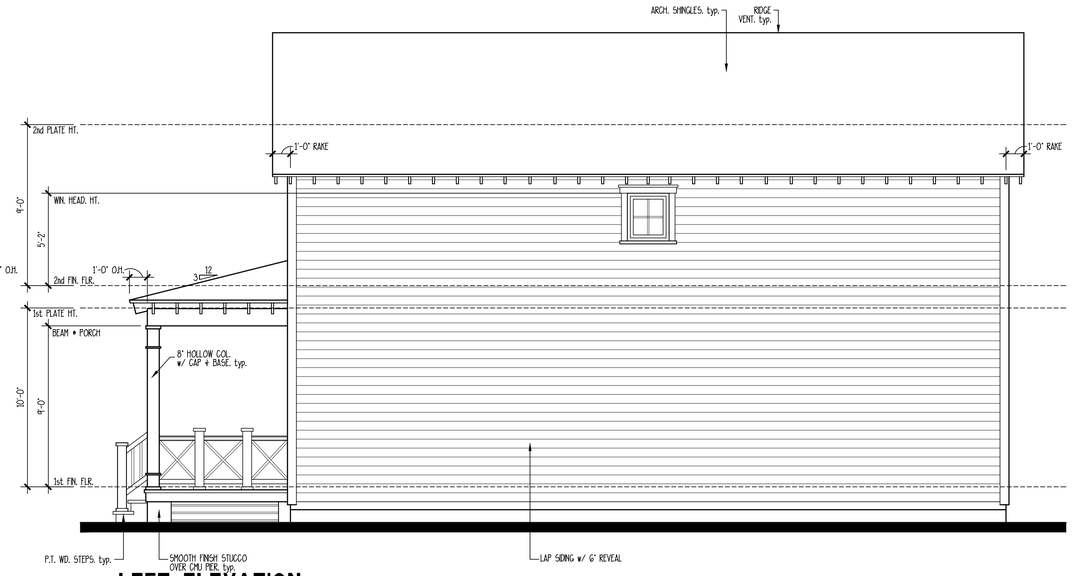

3 LEFT ELEVATION

SCALE: 1/4" = 1'-0"

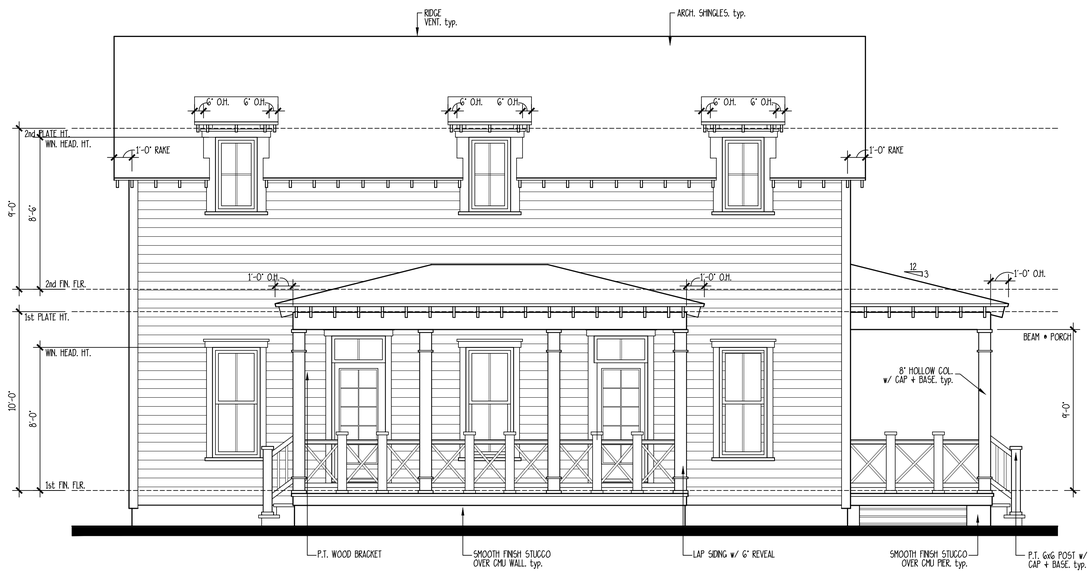

2 LEFT ELEVATION

SCALE: 1/4" = 1'-0"

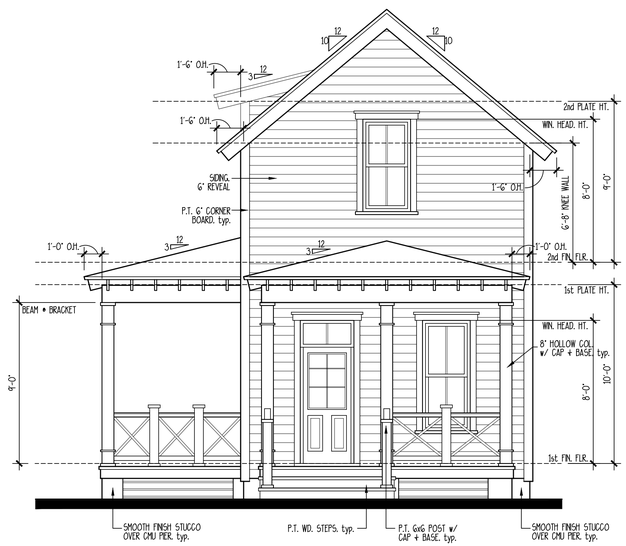

1 FRONT ELEVATION

SCALE: 1/4" = 1'-0"

ALLENDALE 2

ALLISON RAMSEY Architects Inc. creating sustainable timeless design
1003 Charles St. | Suite 515, Battery Park Ave.
Beaufort S.C. 29902 | Asheville, NC 28801
(843) 986-0559 | (828) 350-1266
www.allisonramseyarchitect.com

THIS PLAN HAS BEEN PREPARED TO MEET TOP PROFESSIONAL STANDARDS AND PRACTICES. HOWEVER, BUILDING CODES AND ENVIRONMENTAL CONDITIONS VARY FOR DIFFERENT LOCATIONS. IT IS THE RESPONSIBILITY OF THE PURCHASER OF THIS PLAN TO PERFORM THE FOLLOWING BEFORE BEGINNING CONSTRUCTION. ALLISON RAMSEY ARCHITECTS, INC. ASSUMES NO LIABILITY FOR ANY HOME CONSTRUCTED FROM THIS PLAN.

-VERIFY ALL DIMENSIONS PRIOR TO PROCEEDING WITH CONSTRUCTION
-VERIFY COMPLIANCE WITH ALL LOCAL CODES
-PLANS INDICATE LOCATIONS ONLY; ENGINEERING ASPECTS SHOULD INCORPORATE ACTUAL SITE CONDITIONS.
-HVAC + PLUMBING LAYOUTS ARE NOT INCLUDED. THESE SHOULD BE OBTAINED FROM A LOCAL MECH. CONTRACTOR OR ENGINEER TO ENSURE COMPLIANCE WITH LOCAL CODE AND THAT EQUIPMENT IS SIZED CORRECTLY FOR YOUR PARTICULAR REGION AND CONDITIONS.
-VERIFY ALL STRUCTURAL ELEMENTS WITH LOCAL ENGINEER AND/OR ARCHITECT.

DATE :	02/22/2010
JOB NO. :	09412
DWN. BY :	MJS
DWG. NAME :	09412-Allendale 2.dwg

Copyright © 2010 by Allison Ramsey Architects, Inc. All rights reserved.

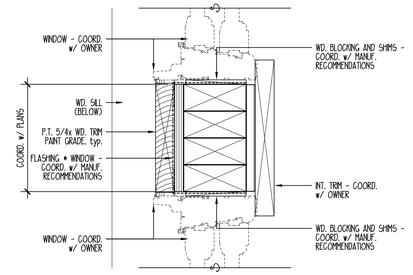

7 TYPICAL WINDOW JAMB @ MULL

SCALE: 3" = 1'-0"

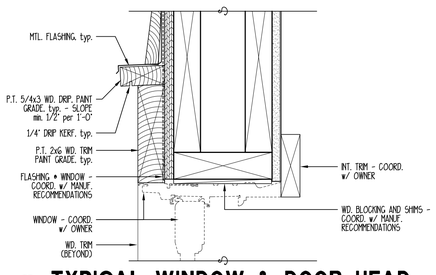

6 TYPICAL WINDOW & DOOR HEAD

SCALE: 3" = 1'-0"

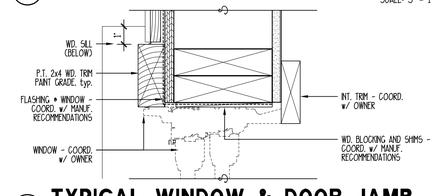

5 TYPICAL WINDOW & DOOR JAMB

SCALE: 3" = 1'-0"

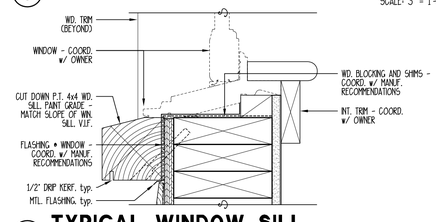

4 TYPICAL WINDOW SILL

SCALE: 3" = 1'-0"

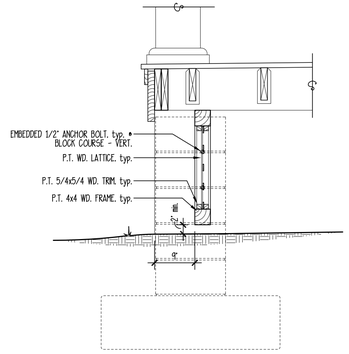

3 WD. LATTICE DETAIL

SCALE: 3/4" = 1'-0"

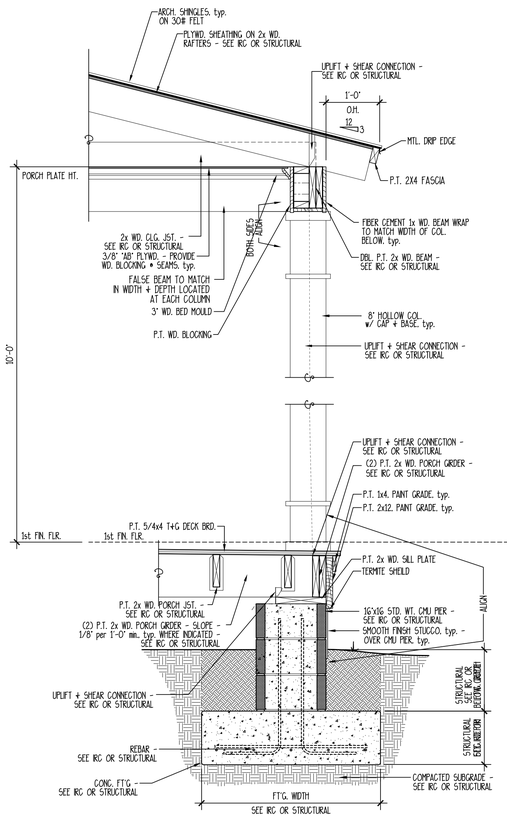

2 TYPICAL PORCH SECTION

SCALE: 3/4" = 1'-0"

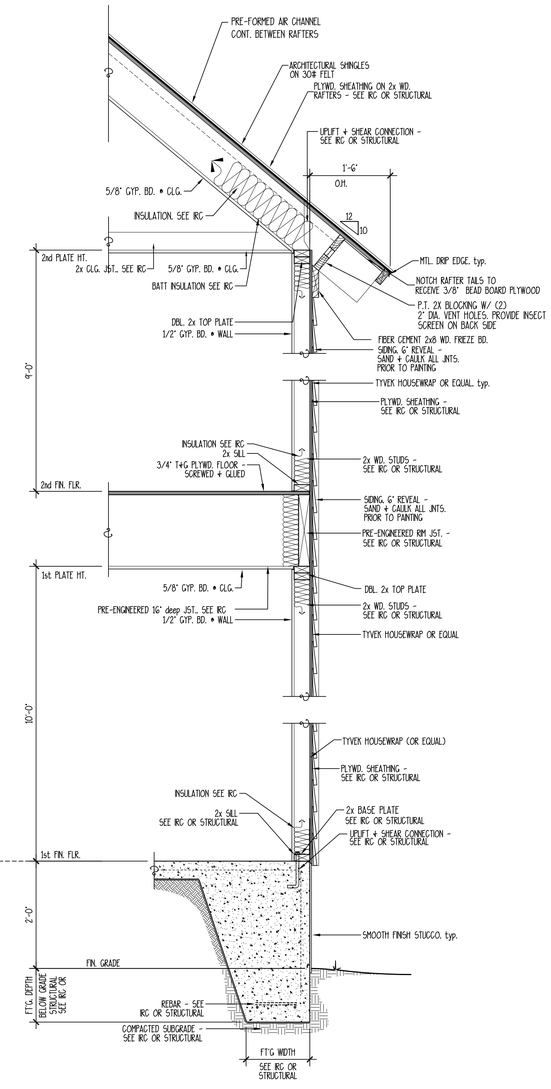

1 TYPICAL WALL SECTION

SCALE: 3/4" = 1'-0"

NOTES:
1. VERIFY MIN. FOOTING DEPTH BELOW FROST LINE WITH LOCAL BUILDING CODES
2. VERIFY HIGH WIND RESISTANCE REQUIREMENTS WITH LOCAL BUILDING INSPECTOR.

Copyright © 2010 by Allison Ramsey Architects, Inc. All rights reserved.

ALLENDALE 2

ALLISON RAMSEY Architects PLLC - creating sustainable timeless design
1003 Charles St. | Suite 515. Battery Park Ave.
Beaufort SC. 29902 | Asheville. NC 28801
(843) 986-0559 | (828) 350-1266
www.allisonramseyarchitect.com

THIS PLAN HAS BEEN PREPARED TO MEET TOP PROFESSIONAL STANDARDS AND PRACTICES. HOWEVER, BUILDING CODES AND ENVIRONMENTAL CONDITIONS VARY FOR DIFFERENT LOCATIONS. IT IS THE RESPONSIBILITY OF THE PURCHASER OF THIS PLAN TO PERFORM THE FOLLOWING BEFORE CONSTRUCTION BEGINS. ALLISON RAMSEY ARCHITECTS, INC. ASSUMES NO LIABILITY FOR ANY HOME CONSTRUCTED FROM THIS PLAN.

-VERIFY ALL DIMENSIONS PRIOR TO PROCEEDING WITH CONSTRUCTION
-VERIFY COMPLIANCE WITH ALL LOCAL CODES
-PLANS INDICATE LOCATIONS ONLY; ENGINEERING ASPECTS SHOULD INCORPORATE
ALL LOCAL CODES AND CONDITIONS
-HVAC • PLUMBING LAYOUTS ARE NOT INCLUDED. THESE SHOULD BE OBTAINED FROM A LOCAL MECH. CONTRACTOR OR ENGINEER TO ENSURE COMPLIANCE WITH LOCAL CODE
-VERIFY THAT FOUNDATIONS ARE DESIGNED TO SUPPORT SOIL CONDITIONS AND LOADS
-VERIFY ALL STRUCTURAL ELEMENTS WITH LOCAL ENGINEER AND/OR ARCHITECT

DATE :	02/22/2010
JOB NO. :	0912
DWN. BY :	MJS
DWG. NAME :	0912-Allendale 2.dwg

3

SYMBOLS + KEYS

DOOR AND WINDOW SIZE KEY
2860 = 2'-8" WIDE x 6'-0" HIGH

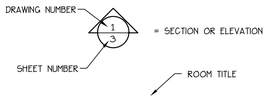

1 **DRAWING TITLE**

1 DETAIL OR ELEVATION NUMBER

14.00' = ELEVATION ABOVE SEA LEVEL

1 = REVISION NUMBER

= REVISION CLOUD

REF. 88 = PLAN REFERENCE NORTH

S	SINGLE POLE SWITCH
S3	THREE WAY SWITCH
S4	FOUR WAY SWITCH
SD	DIMMER SWITCH
SFC	SPEED CONTROL
	DUPLEX OUTLET
	1/2 HOT OUTLET
WP	WATER PROOF OUTLET
GF	GROUND FAULT OUTLET
	QUADRUPLEX OUTLET
	SPECIALTY OUTLET
	FLOOR OUTLET
	TELEPHONE JACK
T	THERMOSTAT
TV	TELEVISION JACK
V	VENT
V/L	VENT w/ LIGHT
	SURFACE MOUNTED FIXTURE
	RECESSED FIXTURE
	WALL MOUNTED FIXTURE
	FLOOD LIGHT
	LED FIXTURE
	CEILING FAN
	STRIP LIGHTING
J	CEILING BOX
B	DOOR CHIME
	ELECTRICAL PANEL
S	SMOKE DETECTOR
CO	CARBON MONOXIDE DETECTOR



CONCEPTUAL RENDERING

DRAWING INDEX

0	COVER SHEET
S	SITE PLAN
1	FOUNDATION PLAN
2	FIRST FLOOR PLAN
3	SECOND FLOOR PLAN
4	ELEVATIONS
5	ELEVATIONS
6	WALL SECTIONS/ DETAILS/ ROOF PLAN
7	FIRST FLOOR ELECTRICAL LAYOUT
8	SECOND FLOOR ELECTRICAL LAYOUT
SP1	SPECIFICATIONS
SP2	SPECIFICATIONS
SP3	SPECIFICATIONS

GENERAL INFO.

AREA CALCULATIONS

FIRST FLOOR HEATED = 512 S.F. COVERED PORCH = 120 S.F.

SECOND FLOOR HEATED = 578 S.F.

TOTAL HEATED = 1090 S.F.

23408 - THE JAMES II

THE JAMES II

ALLISON RAMSEY Architects, Inc. creating sustainable timeless design
1003 Charles St.
Beaufort SC, 29902
(843) 986-0559
www.allisonramseyarchitect.com

THIS PLAN HAS BEEN PREPARED TO MEET TOP PROFESSIONAL STANDARDS AND PRACTICES. HOWEVER, BUILDING CODES AND ENVIRONMENTAL CONDITIONS VARY FOR DIFFERENT LOCATIONS. IT IS THE RESPONSIBILITY OF THE PURCHASER OF THIS PLAN TO STUDY AND BECOME FAMILIAR WITH ALL LOCAL CODES AND REGULATIONS AND TO RETAIN THE SERVICES OF A LICENSED ARCHITECT OR ENGINEER TO ADAPT THIS PLAN TO SPECIFIC SITE CONDITIONS AND TO OBTAIN A BUILDING PERMIT FOR ANY HOME CONSTRUCTED FROM THIS PLAN.

-VERIFY ALL DIMENSIONS PRIOR TO PROCEEDING WITH CONSTRUCTION
-VERIFY COMPLIANCE WITH ALL LOCAL CODES
-PLANS INDICATE LOCATIONS ONLY; ENGINEERING ASPECTS SHOULD INCORPORATE LOCAL CODE REQUIREMENTS
-HVAC & PLUMBING LAYOUTS ARE NOT INCLUDED. THESE SHOULD BE OBTAINED FROM A LOCAL HVAC CONTRACTOR OR ENGINEER TO ENSURE COMPLIANCE WITH LOCAL CODE
-WE HAVE ELECTED TO OMIT CERTAIN DETAILS FOR CLARITY. IT IS ASSUMED THAT THE CONTRACTOR IS SELECTING CORRECT FOR THE PARTICULAR REGION AND CONDITIONS.
-VERIFY ALL STRUCTURAL LISTINGS WITH LOCAL CODES AND AHJ APPROVED

DATE:	10/27/2023
JOB NO.	XXXXX
DWN. BY:	JMG
DWG. NAME:	XXXXX.DWG

Copyright 2023 by Allison Ramsey Architects, Inc. All rights reserved.

0

THE JAMES II

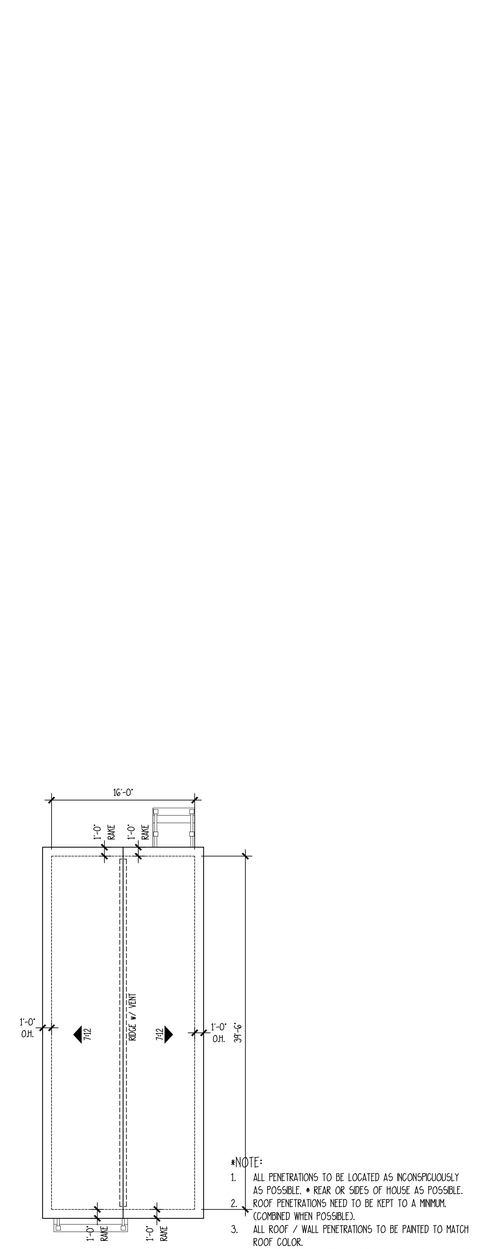

*NOTE:
1. ALL PENETRATIONS TO BE LOCATED AS INCONSPICUOUSLY AS POSSIBLE. • REAR OR SIDES OF HOUSE AS POSSIBLE.
2. ROOF PENETRATIONS NEED TO BE KEPT TO A MINIMUM. (COMBINED WHEN POSSIBLE).
3. ALL ROOF / WALL PENETRATIONS TO BE PAINTED TO MATCH ROOF COLOR.
4. TWO (2) LAYERS UNDERLAYMENT REQUIRED WHEN 4:12 ROOF PITCH OR LOWER.

ROOF PLAN

SCALE: 1/8" = 1'-0"

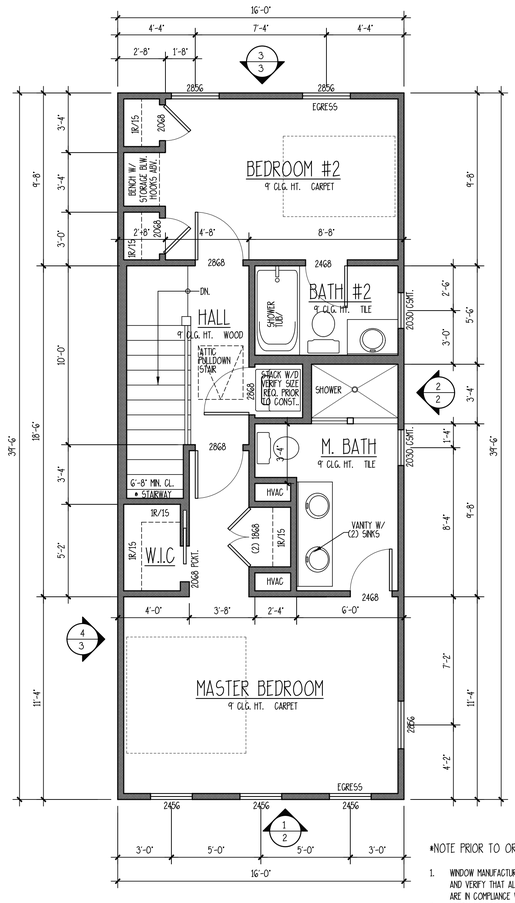

*NOTE PRIOR TO ORDERING:
1. WINDOW MANUFACTURER TO DETERMINE AND VERIFY THAT ALL EGRESS WINDOWS ARE IN COMPLIANCE WITH LOCAL CODES.
2. VERIFY LOCATIONS OF REQUIRED SAFETY GLAZING WITH LOCAL CODES.

SECOND FLOOR PLAN

SCALE: 1/4" = 1'-0"

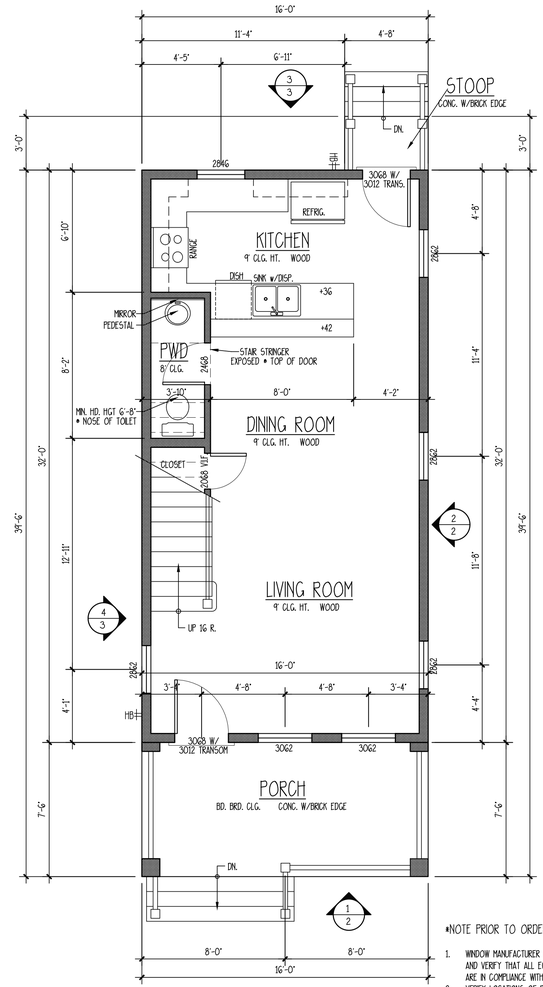

*NOTE PRIOR TO ORDERING:
1. WINDOW MANUFACTURER TO DETERMINE AND VERIFY THAT ALL EGRESS WINDOWS ARE IN COMPLIANCE WITH LOCAL CODES.
2. VERIFY LOCATIONS OF REQUIRED SAFETY GLAZING WITH LOCAL CODES.

FIRST FLOOR PLAN

SCALE: 1/4" = 1'-0"

ALLISON RAMSEY Architects, PLLC
creating sustainable timeless designs
1003 Charles St.
Beaufort SC, 29902
(843) 986-0359
www.allisonramseyarchitect.com

THIS PLAN HAS BEEN PREPARED TO MEET TYP PROFESSIONAL STANDARDS AND PRACTICES. HOWEVER, BUILDING CODES AND ENVIRONMENTAL CONDITIONS VARY FOR DIFFERENT LOCATIONS. IT IS THE RESPONSIBILITY OF THE PURCHASER OF THIS PLAN TO STRUCTURE THE FOLLOWING BY WHOM CONSTRUCTED FROM THIS PLAN.

- VERIFY COMPLIANCE WITH ALL LOCAL CODES
- PLANS INDICATE LOCATIONS ONLY; ENGINEERING EXPERTS SHOULD INCORPORATE ALL STRUCTURAL ELEMENTS
- HVAC, PLUMBING LAYOUTS ARE NOT INCLUDED; THESE SHOULD BE DESIGNED FROM A LOCAL MECH. CONTRACTOR OR ENGINEER TO ENSURE COMPLIANCE WITH LOCAL CODE
- AND THAT EQUIPMENT IS SIZED CORRECTLY FOR YOUR PARTICULAR REGION AND CONDITIONS.
- VERIFY ALL STRUCTURAL LOADINGS WITH LOCAL CODES AND APPLICABLE

DATE:	06/22/2023
JOB NO.	XXXX
DWN. BY:	JNG
DWG. NAME:	XXXXJNG

Copyright 2023 by Allison Ramsey Architects, Inc. All rights reserved.

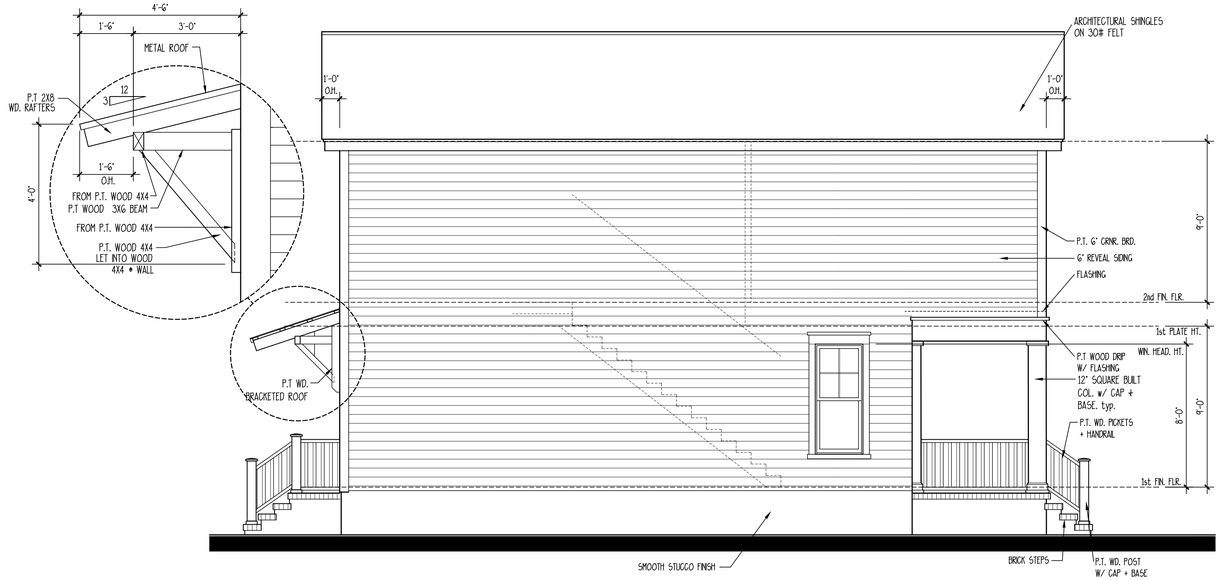

2 LEFT ELEVATION

SCALE: 1/4" = 1'-0"

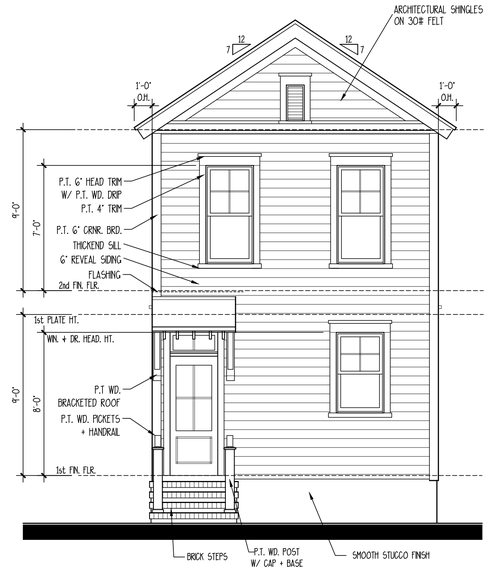

3 REAR ELEVATION

SCALE: 1/4" = 1'-0"

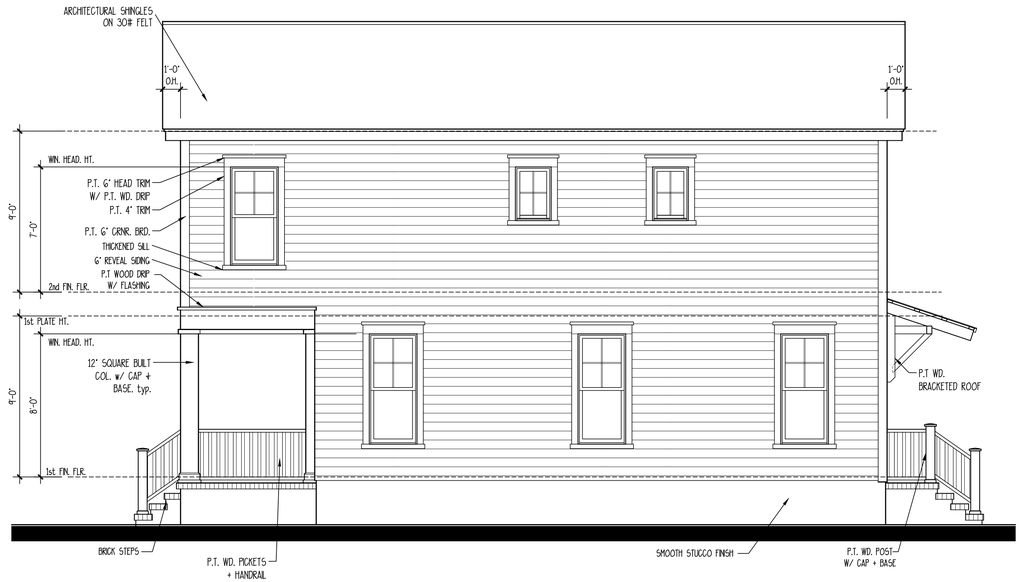

4 RIGHT ELEVATION

SCALE: 1/4" = 1'-0"

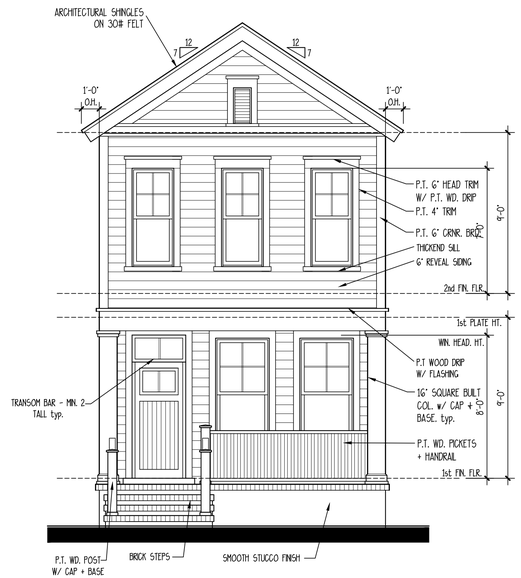

D FRONT ELEVATION LOT 16

SCALE: 1/4" = 1'-0"

THE JAMES II

ALLISON RAMSEY Architects, Inc. creating sustainable timeless design
1033 Charles St.
Beaufort SC, 29902
(843) 986-0559
www.allisonramseyarchitect.com

THIS PLAN HAS BEEN PREPARED TO MEET CITY PROFESSIONAL STANDARDS AND PRACTICES. DIMENSIONS, BUILDING CODES AND ENVIRONMENTAL CONDITIONS VARY FOR DIFFERENT LOCATIONS. IT IS THE RESPONSIBILITY OF THE PURCHASER OF THIS PLANS TO PREPARE THE FOLLOWING: BEFORE BEGINNING CONSTRUCTION, THE BUILDER OR PROPERTY OWNER(S) SHALL ASSURES THE SUBJECT FOR ANY ITEMS CONSTRUCTED FROM THIS PLAN.

- VERIFY ALL DIMENSIONS PRIOR TO PROCEEDING WITH CONSTRUCTION
- VERIFY COMPLIANCE WITH ALL LOCAL CODES
- PLANS INDICATE LOCATIONS ONLY; ENGINEERING ASPECTS SHOULD ACCOMPANY
- ALL ELECTRICAL LOCATIONS
- STRUCT. PLUMBING LAYOUTS ARE NOT INCLUDED. THESE SHOULD BE OBTAINED FROM A LOCAL MECH. CONTRACTOR OR ENGINEER TO ENSURE COMPLIANCE WITH LOCAL CODE AND THAT EQUIPMENT IS BEST SUITABLE FOR YOUR PARTICULAR NEEDS AND LIMITATIONS.
- VERIFY ALL STRUCTURAL SYSTEMS WITH LOCAL CODES AND APPROVED AUTHORITIES

DATE:	06/22/2023
JOB NO.	XXXXX
DWN. BY:	JNG
DWG. NAME:	XXXXLDWG

Copyright 2023 by Allison Ramsey Architects, Inc. All rights reserved.

SYMBOLS + KEYS

DOOR AND WINDOW SIZE KEY
2860 = 2'-8" WIDE x 6'-0" HIGH

DRAWING NUMBER — 1 / 3 = SECTION OR ELEVATION — SHEET NUMBER

ROOM TITLE
KITCHEN
10' CLG. WOOD
CEILING HEIGHT — FLOOR FINISH

1 **DRAWING TITLE**
DETAIL OR ELEVATION NUMBER

14.00' = ELEVATION ABOVE SEA LEVEL
1 = REVISION NUMBER
= REVISION CLOUD
REF. = PLAN REFERENCE NORTH

	SINGLE POLE SWITCH
	THREE WAY SWITCH
	FOUR WAY SWITCH
	DIMMER SWITCH
	SPEED CONTROL
	DUPLEX OUTLET
	1/2 HOT OUTLET
WP	WATER PROOF OUTLET
GF	GROUND FAULT OUTLET
	QUADRUPLEX OUTLET
	SPECIALTY OUTLET
	FLOOR OUTLET
	TELEPHONE JACK
T	THERMOSTAT
TV	TELEVISION JACK
V	VENT
V/L	VENT w/ LIGHT
	SURFACE MOUNTED FIXTURE
	RECESSED FIXTURE
	WALL MOUNTED FIXTURE
	FLOOD LIGHT
	LED FIXTURE
	CEILING FAN
	STRIP LIGHTING
J	CEILING BOX
B	DOOR CHIME
	ELECTRICAL PANEL
S	SMOKE DETECTOR
CO	CARBON MONOXIDE DETECTOR



CONCEPTUAL RENDERING

DRAWING INDEX

0	COVER SHEET
S	SITE PLAN
1	FOUNDATION PLAN
2	FIRST FLOOR PLAN
3	SECOND FLOOR PLAN
4	ELEVATIONS
5	ELEVATIONS
6	WALL SECTIONS/ DETAILS/ ROOF PLAN
7	FIRST FLOOR ELECTRICAL LAYOUT
8	SECOND FLOOR ELECTRICAL LAYOUT
SP1	SPECIFICATIONS
SP2	SPECIFICATIONS
SP3	SPECIFICATIONS

GENERAL INFO.

AREA CALCULATIONS

FIRST FLOOR HEATED = 512 S.F. COVERED PORCH = 120 S.F.
SECOND FLOOR HEATED = 578 S.F.
TOTAL HEATED = 1090 S.F.

23408 - THE JAMES II

THE JAMES II

ALLISON RAMSEY Architects Inc. creating sustainable timeless design
1003 Charles St.
Beaufort SC, 29902
(843) 986-0559
www.allisonramseyarchitect.com

THIS PLAN HAS BEEN PREPARED TO MEET TOP PROFESSIONAL STANDARDS AND PRACTICES. HOWEVER, BUILDING CODES AND ENVIRONMENTAL CONDITIONS VARY FOR DIFFERENT LOCATIONS. IT IS THE RESPONSIBILITY OF THE PURCHASER OF THIS PLAN TO PREPARE THE FOLLOWING BEFORE BEGINNING CONSTRUCTION. ALLISON RAMSEY ARCHITECTS, INC. ASSUMES NO LIABILITY FOR ANY TYPE CONSTRUCTED FROM THIS PLAN.

•VERIFY ALL DIMENSIONS PRIOR TO PROCEEDING WITH CONSTRUCTION
•VERIFY COMPLIANCE WITH ALL LOCAL CODES
•PLANS INDICATE LOCATIONS ONLY, ENGINEERING ASPECTS SHOULD INCORPORATE ACTUAL SITE CONDITIONS.
•PRINT PLANNING LAYOUTS ARE NOT INCLUDED. THESE SHOULD BE OBTAINED FROM A LOCAL MEDIA CONTRACTOR OR ENGINEER TO ENSURE COMPLIANCE WITH LOCAL CODE AND THAT EQUIPMENT IS SIZED CORRECTLY FOR YOUR PARTICULAR REGION AND CONDITIONS.
•VERIFY ALL STRUCTURAL ELEMENTS WITH LOCAL ENGINEER AND/OR ARCHITECT.

DATE:	10/27/2023
JOB NO.	XXXXX
DWN. BY:	JKG
DWG. NAME:	XXXXX.DWG

Copyright 2023 by Allison Ramsey Architects, Inc. All rights reserved.

0

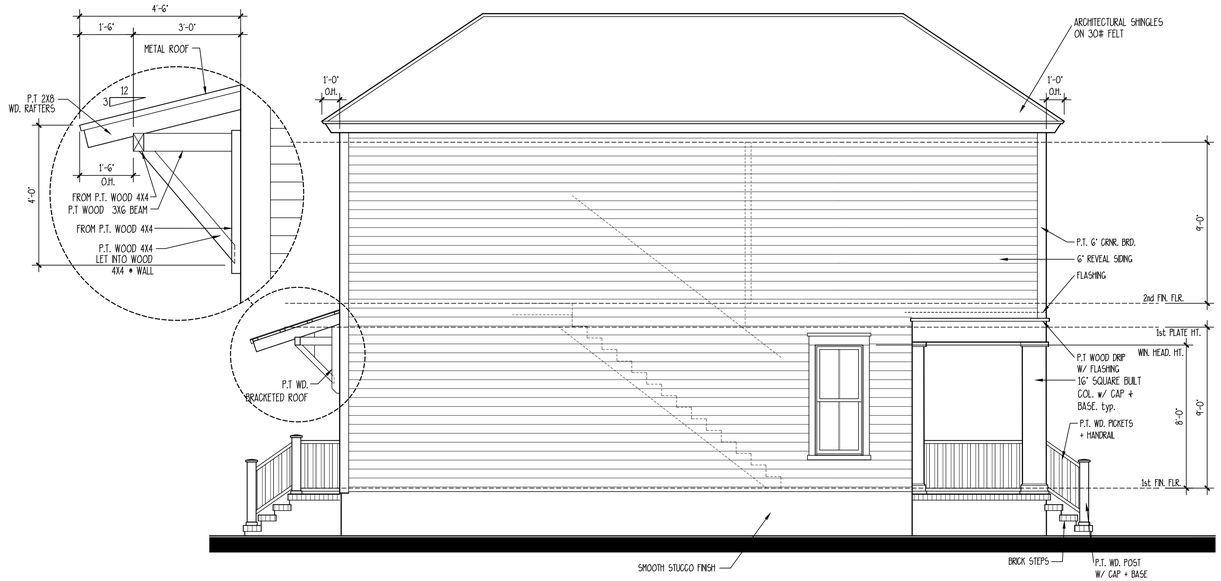

2 LEFT ELEVATION

SCALE: 1/4" = 1'-0"

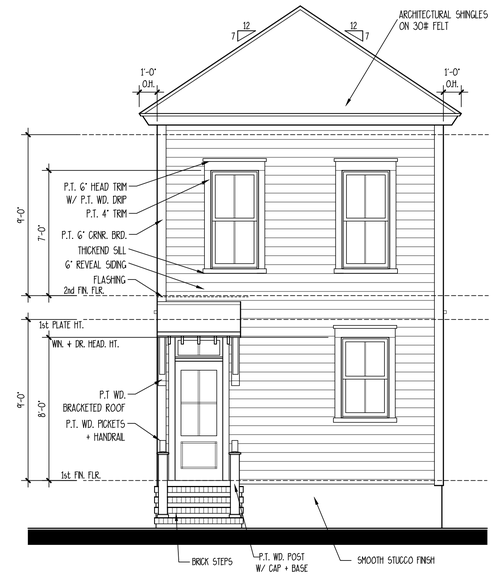

3 REAR ELEVATION

SCALE: 1/4" = 1'-0"



4 RIGHT ELEVATION

SCALE: 1/4" = 1'-0"

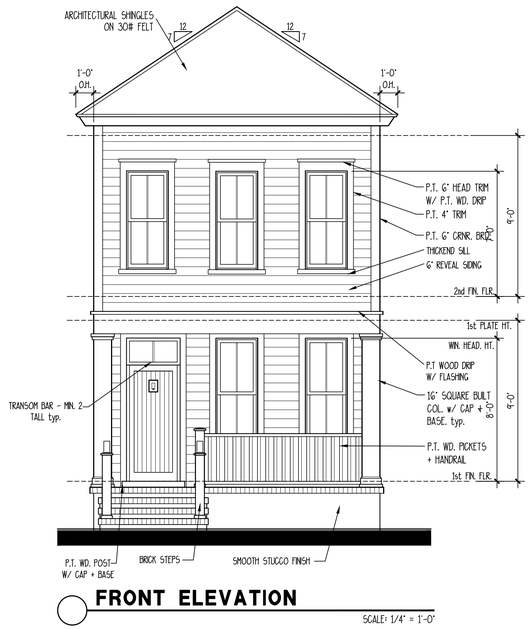

FRONT ELEVATION

SCALE: 1/4" = 1'-0"

THE JAMES II

ALLISON RAMSEY Architects, inc. creating sustainable timeless design
1003 Charles St.
Beaufort SC, 29902
(843) 986-0559
www.allisonramseyarchitect.com

THIS PLAN HAS BEEN PREPARED TO MEET CITY PROFESSIONAL STANDARDS AND PROJECTS, DOMESTIC BUILDING COSTS AND ENVIRONMENTAL CONDITIONS THAT FOR DIFFERENT LOCATIONS. IT IS THE RESPONSIBILITY OF THE PURCHASER OF THIS PLANS TO PERFORM THE FOLLOWING BEFORE BEGINNING CONSTRUCTION: A) VERIFY ALL DIMENSIONS AND CONDITIONS. ALL ASSUMED TO BE CORRECT FOR ANY NOTE CONTRADICTED FROM THIS PLAN.

•VERIFY ALL DIMENSIONS PRIOR TO PROCEEDING WITH CONSTRUCTION
•VERIFY COMPLIANCE WITH ALL LOCAL CODES
PLANS REQUIRE LOCATIONS ONLY; ENGINEERING ASPECTS SHOULD ACCOMPANY
ALL SITE SPECIFIC DRAWINGS
•HVAC, PLUMBING LAYOUTS ARE NOT INCLUDED. THESE SHOULD BE OBTAINED FROM A LOCAL HVAC CONTRACTOR OR ENGINEER TO ENSURE COMPLIANCE WITH LOCAL CODE AND THAT EQUIPMENT IS SIZED CORRECTLY FOR PARTICULAR HOUSE AND CONDITIONS.
•VERIFY ALL STRUCTURAL SYSTEMS WITH LOCAL ENGINEER AND ARCHITECT

DATE:	06/22/2023
JOB NO.	XXXXX
DWN. BY:	JKG
DWG. NAME:	XXXXLDWG

Copyright 2023 by Allison Ramsey Architects, Inc. All rights reserved.

SYMBOLS + KEYS

DOOR AND WINDOW SIZE KEY
2860 = 2'-8" WIDE x 6'-0" HIGH

DRAWING NUMBER — 1 / 3 = SECTION OR ELEVATION — SHEET NUMBER

ROOM TITLE
KITCHEN
10' CLG. WOOD
CEILING HEIGHT — FLOOR FINISH

1 **DRAWING TITLE**
DETAIL OR ELEVATION NUMBER

14.00' = ELEVATION ABOVE SEA LEVEL
1 = REVISION NUMBER
= REVISION CLOUD
REF. N = PLAN REFERENCE NORTH

	SINGLE POLE SWITCH
	THREE WAY SWITCH
	FOUR WAY SWITCH
	DIMMER SWITCH
	SPEED CONTROL
	DUPLEX OUTLET
	1/2 HOT OUTLET
WP	WATER PROOF OUTLET
GF	GROUND FAULT OUTLET
	QUADRUPLEX OUTLET
	SPECIALTY OUTLET
	FLOOR OUTLET
	TELEPHONE JACK
T	THERMOSTAT
TV	TELEVISION JACK
V	VENT
V/L	VENT W/ LIGHT
	SURFACE MOUNTED FIXTURE
	RECESSED FIXTURE
	WALL MOUNTED FIXTURE
	FLOOD LIGHT
	FLUORESCENT FIXTURE
	CEILING FAN
	STRIP LIGHTING
	CEILING BOX
	DOOR CHIME
	ELECTRICAL PANEL
	SMOKE DETECTOR
CO	CARBON MONOXIDE DETECTOR

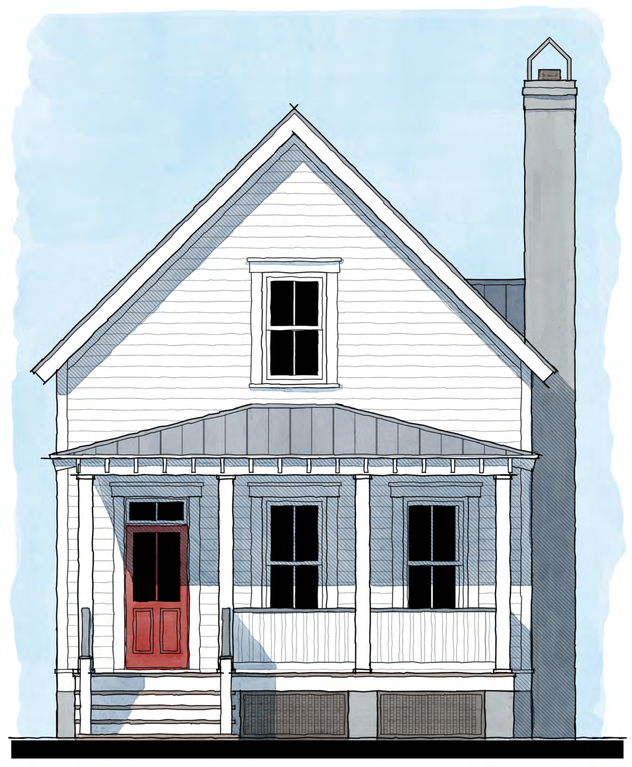

CONCEPTUAL RENDERING

DRAWING INDEX

0	COVER SHEET
1	FOUNDATION PLAN/ROOF PLAN/DETAILS
2	WALL SECTIONS/DETAILS
3	FLOOR PLANS
4	ELEVATIONS
5	ELECTRICAL PLANS
SP1	SPECIFICATIONS
SP2	SPECIFICATIONS
SP3	SPECIFICATIONS

GENERAL INFO.

AREA CALCULATIONS

FIRST FLOOR HEATED = 1077 S.F. COVERED PORCH = 424 S.F.

SECOND FLOOR HEATED = 541 S.F.

TOTAL HEATED = 1618 S.F.

EUHAW CREEK COTTAGE - C0339

EUHAW CREEK COTTAGE - C0339

ARA
ALLISON RAMSEY
Architects Inc. creating sustainable timeless design
1003 Charles St.
Beaufort SC, 29902
(843) 986-0559
www.allisonramseyarchitect.com

THIS PLAN HAS BEEN PREPARED TO MEET TOP PROFESSIONAL STANDARDS AND PRACTICES. HOWEVER, BUILDING CODES AND ENVIRONMENTAL CONDITIONS VARY FOR DIFFERENT LOCATIONS. IT IS THE RESPONSIBILITY OF THE PURCHASER OF THIS PLAN TO PERFORM THE FOLLOWING BEFORE WORK IS CONSTRUCTED. ALLISON RAMSEY ARCHITECTS, INC. ASSUMES NO LIABILITY FOR ANY WORK CONSTRUCTED FROM THIS PLAN.

-VERIFY ALL DIMENSIONS PRIOR TO PROCEEDING WITH CONSTRUCTION
-VERIFY COMPLIANCE WITH ALL LOCAL CODES
-PLANS INDICATE LOCATIONS ONLY; ENGINEERING ASPECTS SHOULD INCORPORATE ACTUAL SITE CONDITIONS
-PLUMBING & PLUMBING LAYOUTS ARE NOT INCLUDED. THESE SHOULD BE OBTAINED FROM A LOCAL HIGH CONTRACTOR OR ENGINEER TO ENSURE COMPLIANCE WITH LOCAL CODE AND THAT EQUIPMENT IS SIZED CORRECTLY FOR YOUR PARTICULAR REGION AND CONDITIONS.
-VERIFY ALL STRUCTURAL ELEMENTS WITH LOCAL ENGINEER AND/OR ARCHITECT.

DATE:	10/05/2017
JOB NO.	C0339
DWN. BY:	BR
DWG. NAME:	C0339.DWG

Copyright 2017 by Allison Ramsey Architects, Inc. All rights reserved.

0

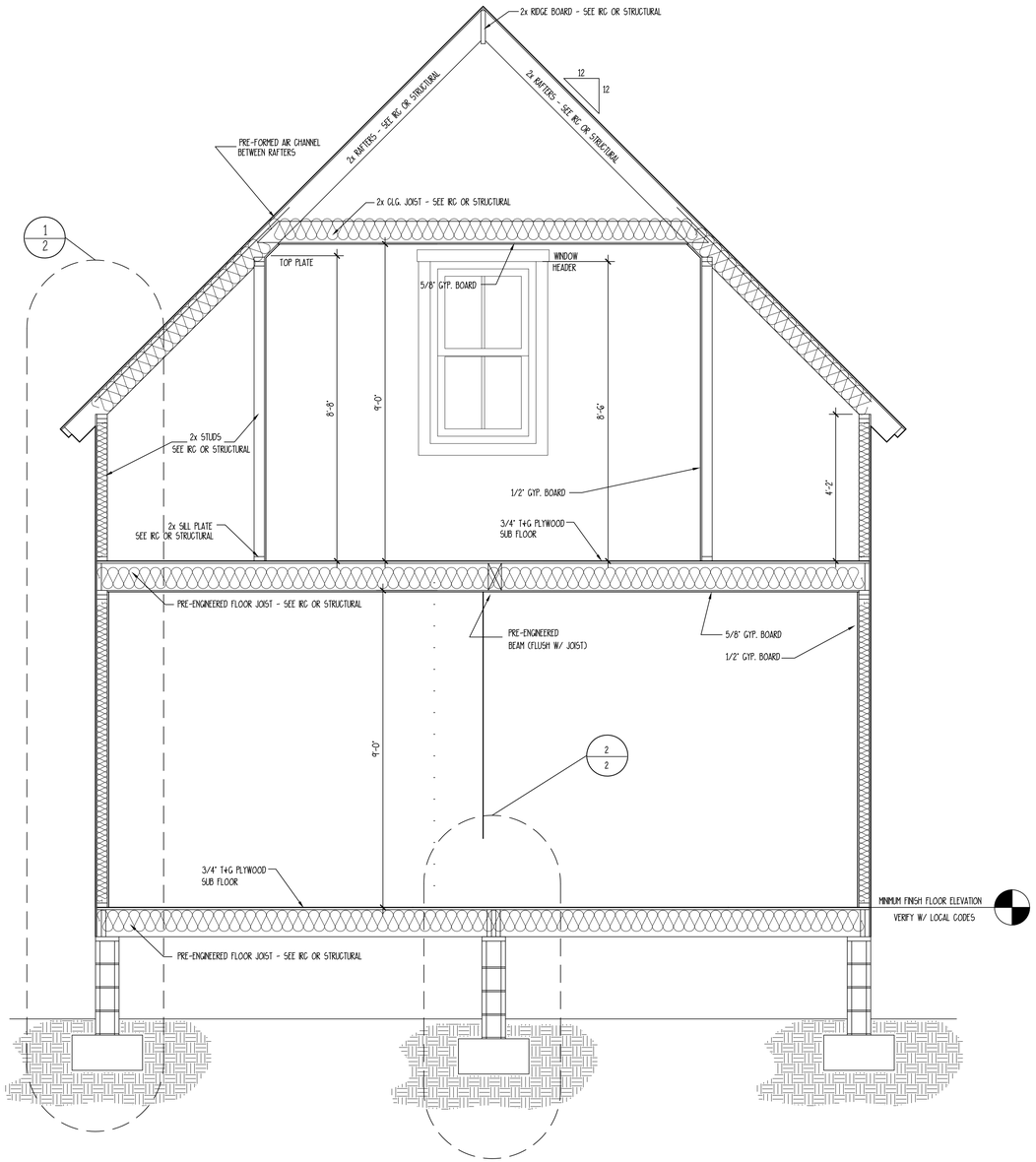

4 BUILDING SECTION

SCALE: 1/2" = 1'-0"

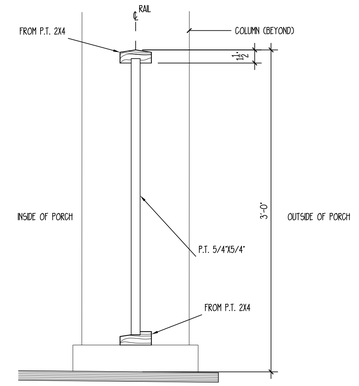

BALUSTER DETAIL

SCALE: 1 1/2" = 1'-0"

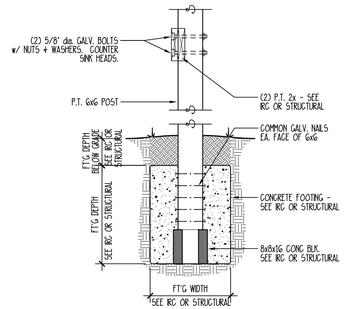

3 6x6 POST DETAIL

SCALE: 3/4" = 1'-0"

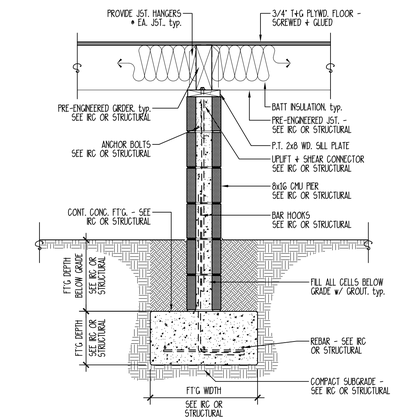

2 TYPICAL INTERIOR PIER

SCALE: 3/4" = 1'-0"

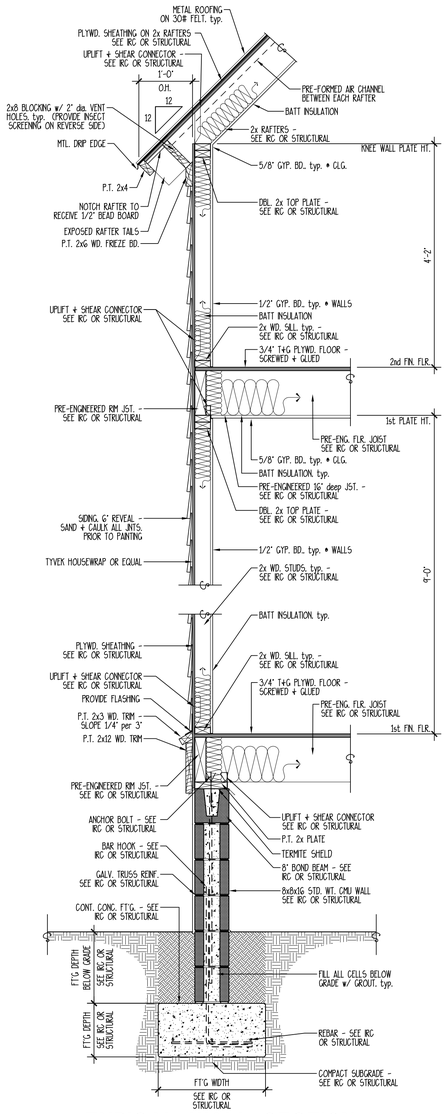

1 TYPICAL WALL SECTION

FILL ALL CELLS BELOW GRADE w/ GROUT, typ.

SCALE: 3/4" = 1'-0"

NOTES:
1. VERIFY MIN. FOOTING DEPTH BELOW FROST LINE WITH LOCAL BUILDING CODES
2. VERIFY HIGH WIND RESISTANCE REQUIREMENTS WITH LOCAL BUILDING INSPECTOR.

EUHAW CREEK COTTAGE - C0339

ALLISON RAMSEY Architects, inc. creating sustainable timeless design
1003 Charles St.
Beaufort SC, 29902
(843) 986-0559
www.allisonramseyarchitect.com

THIS PLAN HAS BEEN PREPARED TO MEET TOP PROFESSIONAL STANDARDS AND PRACTICES. HOWEVER, BUILDING CODES AND ENVIRONMENTAL CONDITIONS VARY FOR DIFFERENT LOCATIONS. IT IS THE RESPONSIBILITY OF THE PURCHASER OF THIS PLAN TO ENSURE THE FOLLOWING:
-VERIFY ALL DIMENSIONS PRIOR TO PROCEEDING WITH CONSTRUCTION
-VERIFY COMPLIANCE WITH ALL LOCAL CODES
-PLANS INDICATE LOCATIONS ONLY FOR ENGINEERING ASPECTS. SHOULD INCORPORATE SUITABLE DETAILS FOR SPECIFIC SITE CONDITIONS.
-STAIRS, FLOORING ASSISTERS ARE NOT INCLUDED. THESE SHOULD BE OBTAINED FROM A LOCAL MILL CONTRACTOR OR ENGINEER TO ENSURE COMPLIANCE WITH LOCAL CODE AND THAT EQUIPMENT IS SIZED CORRECTLY FOR YOUR PARTICULAR REGION AND CONDITIONS.
-ADJUST ALL FOUNDATIONS, SLOPES, SETBACKS AND DETAILS AS REQUIRED

DATE:	10/05/2017
JOB NO.	C0339
DWN. BY:	BR
DWG. NAME:	C0339DWG

Copyright 2017 by Allison Ramsey Architects, Inc. All rights reserved.

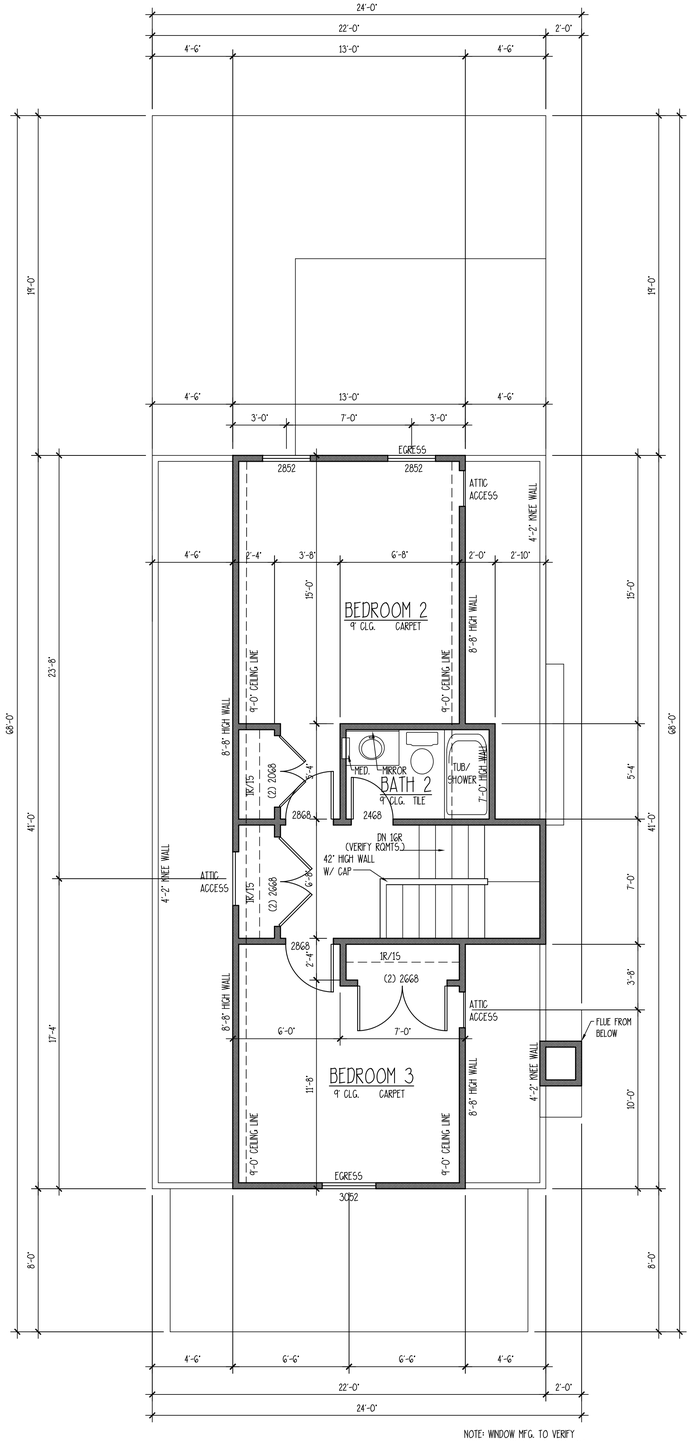

SECOND FLOOR PLAN

SCALE: 1/4" = 1'-0"

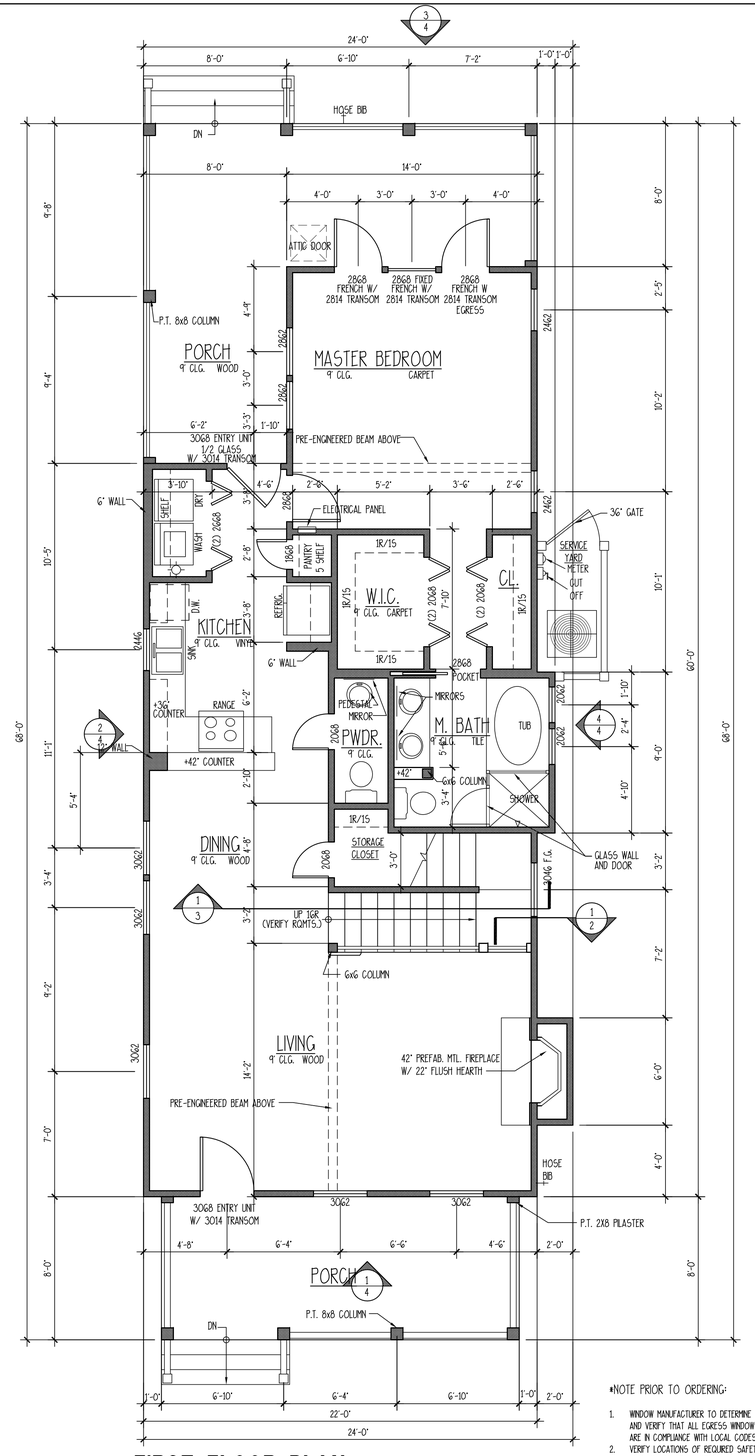

FIRST FLOOR PLAN

SCALE: 1/4" = 1'-0"

*NOTE PRIOR TO ORDERING:

1. WINDOW MANUFACTURER TO DETERMINE AND VERIFY THAT ALL EGRESS WINDOWS ARE IN COMPLIANCE WITH LOCAL CODES.
2. VERIFY LOCATIONS OF REQUIRED SAFETY GLAZING WITH LOCAL CODES.

EUHAW CREEK COTTAGE - C0339

ALLISON RAMSEY Architects, Inc. creating sustainable timeless design
1003 Charles St.
Beaufort SC, 29902
(843) 986-0559
www.allisonramseyarchitect.com

THIS PLAN HAS BEEN PREPARED TO MEET OR EXCEED APPLICABLE NATIONAL, REGIONAL AND LOCAL BUILDING CODES, HOWEVER, BUILDING CODES AND ENVIRONMENTAL CONDITIONS VARY FOR DIFFERENT LOCATIONS. IT IS THE RESPONSIBILITY OF THE BUILDER OR THE OWNER TO DETERMINE THE FOLLOWING BEFORE CONSTRUCTION BEGINS. ALLISON RAMSEY ARCHITECTS, INC. ASSUMES NO LIABILITY FOR ANY HOME CONSTRUCTED FROM THIS PLAN.

- VERIFY ALL DIMENSIONS PRIOR TO PROCEEDING WITH CONSTRUCTION
- VERIFY COMPLIANCE WITH ALL LOCAL CODES
- PLANS INDICATE LOCATIONS ONLY. ENGINEERING ASPECTS SHOULD BE CONDUCT BY A LICENSED ENGINEER.
- HVAC & PLUMBING LAYOUTS ARE NOT INCLUDED. THESE SHOULD BE OBTAINED FROM A LOCAL HVAC CONTRACTOR OR ENGINEER TO ENSURE COMPLIANCE WITH LOCAL CODE
- ARE THE EQUIPMENT IS SIZED CORRECTLY FOR PARTICULAR REGION AND CONDITIONS.
- ADAPT ALL DRAWINGS TO SITE SPECIFIC CONDITIONS AND LOCAL CODES AS NECESSARY.

DATE:	10/05/2017
JOB NO.	C0339
DWN. BY:	BR
DWG. NAME:	C0339LDWG

Copyright 2017 by Allison Ramsey Architects, Inc. All rights reserved.

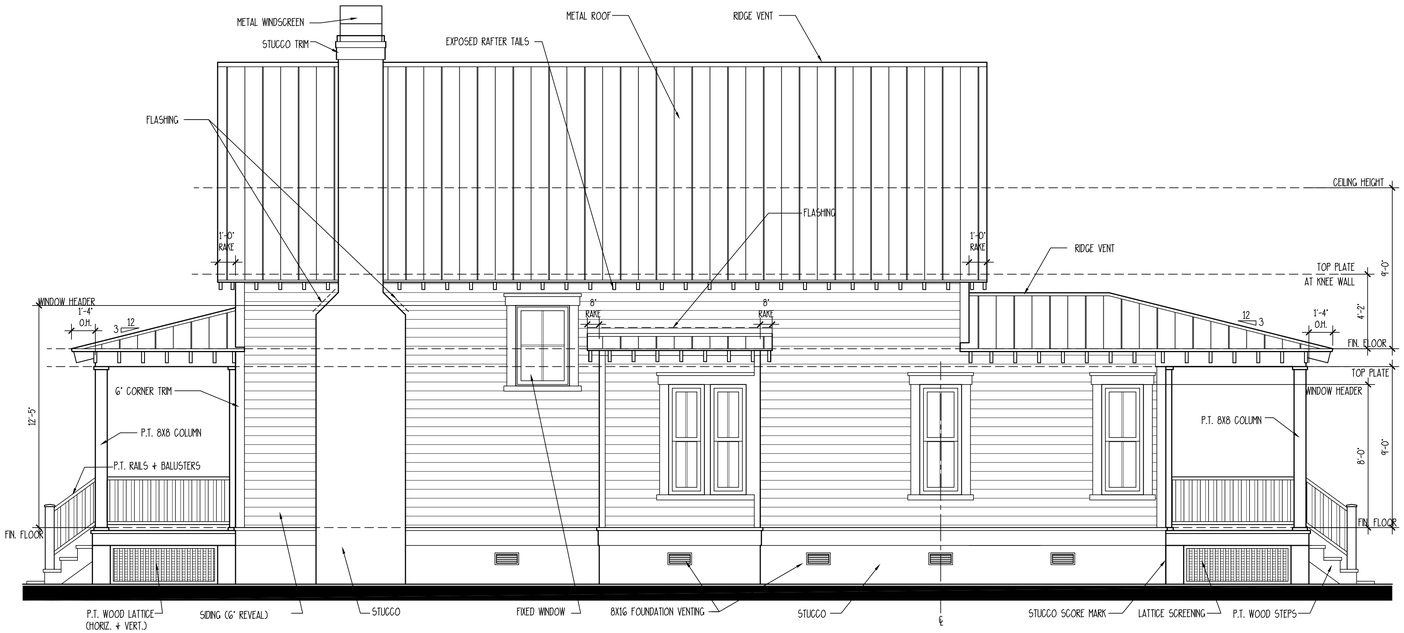

4 RIGHT ELEVATION

SCALE: 1/4" = 1'-0"

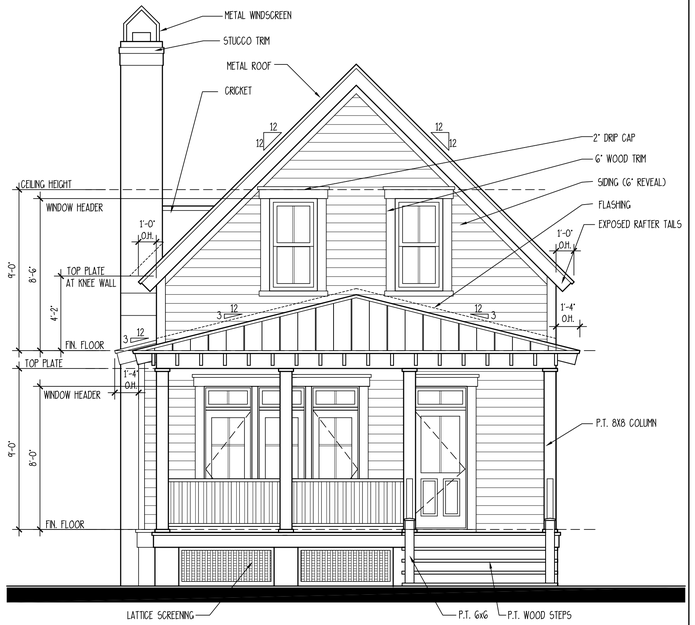

3 REAR ELEVATION

SCALE: 1/4" = 1'-0"



2 LEFT ELEVATION

SCALE: 1

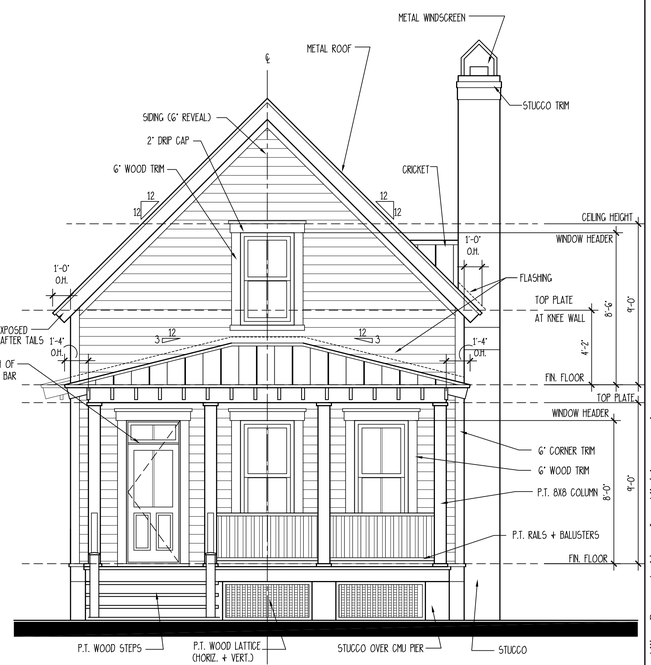

1 FRONT ELEVATION

SCALE: 1/4" = 1'-0"

EUHAW CREEK COTTAGE - C0339

ALLISON RAMSEY Architects, Inc. creating sustainable timeless design
1003 Charles St.
Beaufort SC, 29902
(843) 986-0559
www.allisonramseyarchitect.com

THIS PLAN HAS BEEN PREPARED TO MEET TYP PROFESSIONAL STANDARDS AND PRACTICES. HOWEVER, BUILDING CODES AND ENVIRONMENTAL CONDITIONS VARY FOR DIFFERENT LOCATIONS. IT IS THE RESPONSIBILITY OF THE PURCHASER OF THIS PLAN TO VERIFY THE FOLLOWING BEFORE ORDERING PLANS OR CONSTRUCTION DOCUMENTS. ALLISON RAMSEY ARCHITECTS, INC ASSUMES NO LIABILITY FOR ANY HOME CONSTRUCTED FROM THIS PLAN.
-VERIFY COMPLIANCE WITH ALL LOCAL CODES
-PLANS INDICATE LOCATIONS ONLY; DIMENSIONS &/OR DETAILS SHOULD INCORPORATE ACTUAL PRODUCT SPECIFICATIONS
-SMALL PLUMBING LAYOUTS ARE NOT INCLUDED. THESE SHOULD BE DESIGNED FROM A LOCAL MECH. CONTRACTOR OR ENGINEER TO ENSURE COMPLIANCE WITH LOCAL CODE AND THAT EQUIPMENT IS SIZED CORRECTLY FOR YOUR PARTICULAR REGION AND CONDITIONS.
-VERIFY ALL STRUCTURAL LOADINGS WITH LOCAL ENGINEER AND/OR ARCHITECT

DATE:	10/05/2017
JOB NO.	C0339
DWN. BY:	BR
DWG. NAME:	C0339.DWG

Copyright 2017 by Allison Ramsey Architects, Inc. All rights reserved.

4

SYMBOLS + KEYS

DOOR AND WINDOW SIZE KEY
2860 = 2'-8" WIDE x 6'-0" HIGH

DRAWING # / SHEET # = SECTION OF ELEVATION

ROOM TITLE
KITCHEN
9' CLG. VINYL
CEILING HEIGHT / FLOOR FINISH

1 DRAWING TITLE
1 DETAIL OR ELEVATION NUMBER

14.00' = ELEVATION ABOVE SEA LEVEL

1 = REVISION NUMBER

= REVISION CLOUD

REF. = PLAN REFERENCE NORTH

S	SINGLE POLE SWITCH
S3	THREE WAY SWITCH
S4	FOUR WAY SWITCH
SD	DIMMER SWITCH
	DUPLEX OUTLET
WP	WATER PROOF OUTLET
GF	GROUND FAULT OUTLET
	SPECIALTY OUTLET
	FLOOR OUTLET
	TELEPHONE JACK
TV	TELEVISION JACK
V	VENT
V/L	VENT W/ LIGHT
	SURFACE MOUNTED FIXTURE
	RECESSED FIXTURE
	WALL MOUNTED FIXTURE
	FLOOD LIGHT
	FLOURESCENT FIXTURE
	CEILING FAN
	STRIP LIGHTING
	CEILING BOX
	DOOR CHIME
	ELECTRICAL PANEL
SD	SMOKE ALARM



DRAWING INDEX

0	COVER SHEET
S	SITE PLAN
1	FOUNDATION PLAN + DETAILS
2	FLOOR PLANS
3	ELEVATIONS
4	ELECTRICAL PLANS
SP1	SPECIFICATIONS
SP2	SPECIFICATIONS

GENERAL INFO.

AREA CALCULATIONS

FIRST FLOOR HEATED	563 sq. ft.
SECOND FLOOR HEATED	400 sq. ft.
TOTAL HEATED	963 sq. ft.
COVERED PORCHES	130 sq. ft.

CARSON HOUSE - C0528

CARSON HOUSE C0528

ALLISON RAMSEY ARCHITECTS, Inc.
Members of the American Institute of Architects
255 S. Liberty Street
Asheville, NC 28801
(828) 350-0266
1003 Charles Street
Beaufort, SC 29902
(843) 986-0269
www.allisonramseyarchitect.com

THIS PLAN HAS BEEN PREPARED TO MEET FDIP PROFESSIONAL STANDARDS AND PRACTICES. HOWEVER, BUILDING CODES AND ENVIRONMENTAL CONDITIONS VARY FOR DIFFERENT LOCATIONS. IT IS THE RESPONSIBILITY OF THE PURCHASER OF THIS PLAN TO PERFORM THE FOLLOWING BEFORE BEGINNING CONSTRUCTION. ALLISON RAMSEY ARCHITECTS, INC. ASSUMES NO LIABILITY FOR ANY ITEMS COORDINATED FROM THIS PLAN.

-VERIFY ALL DIMENSIONS PRIOR TO PROCEEDING WITH CONSTRUCTION
-VERIFY CONFORMANCE WITH ALL LOCAL CODES.
-PLANS INDICATE LOCATIONS ONLY; ENGINEERING ASPECTS SHOULD INCORPORATE ACTUAL SITE CONDITIONS.
-HVAC + PLUMBING LAYOUTS ARE NOT INCLUDED; THESE SHOULD BE OBTAINED FROM A LOCAL MECHANICAL CONTRACTOR WHO IS FAMILIAR WITH LOCAL CODES AND CLIMATE CONDITIONS AND THAT EQUIPMENT IS SIZED CORRECTLY FOR YOUR PARTICULAR REGION AND CONDITIONS.
-VERIFY ALL STRUCTURAL ELEMENTS WITH LOCAL ENGINEER AND/OR ARCHITECT.

Copyright © 2005 by Allison Ramsey Architects, Inc. All rights reserved.

DATE:	11/23/2005
JOB NO.	053312
DWN. BY:	AMR
DRAWING NAME	053312.DWG

0



ROOF PLAN

SCALE: 1/8" = 1'-0"

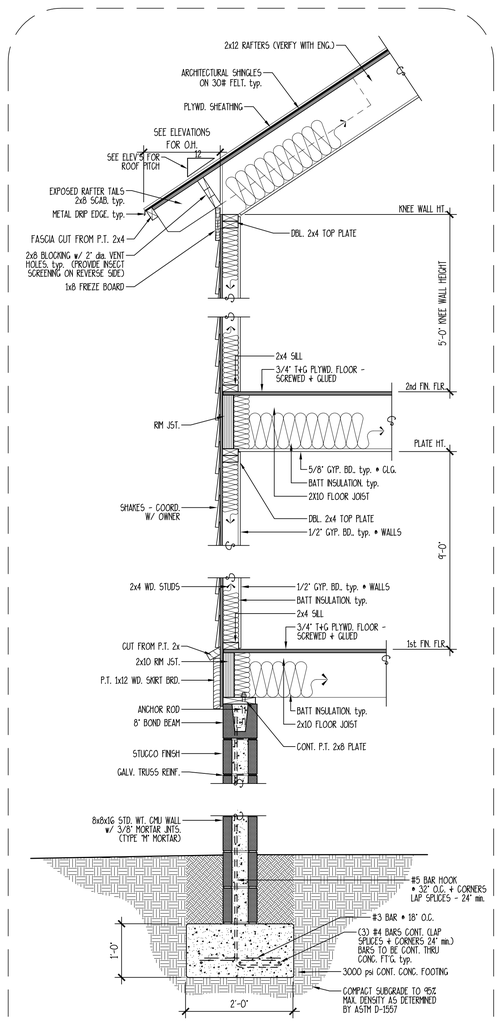

2 WALL SECTION

FILL ALL CELLS BELOW GRADE w/ GROUT. typ.

SCALE: 3/4" = 1'-0"

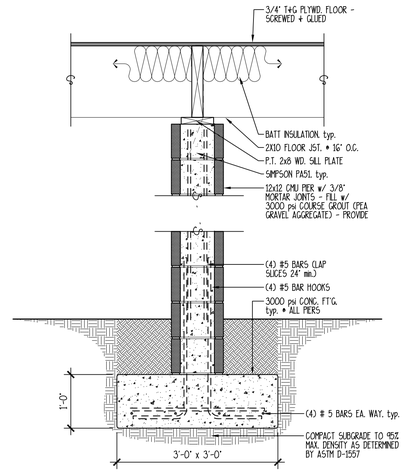

3 TYPICAL INTERIOR PIER

FILL ALL CELLS BELOW GRADE w/ GROUT. typ.

SCALE: 3/4" = 1'-0"

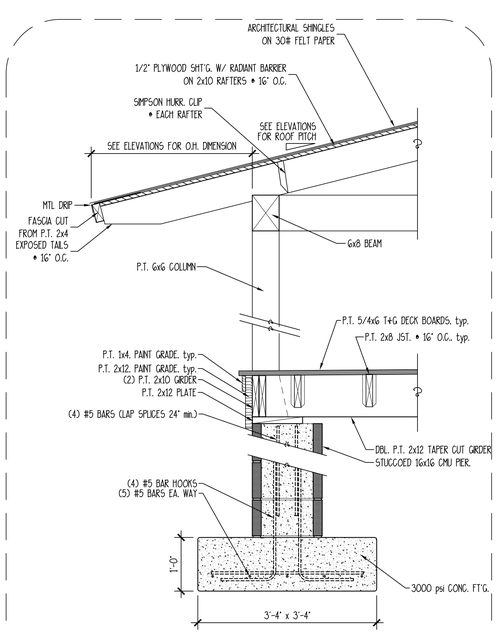

1 TYPICAL PORCH SECTION

SCALE: 3/4" = 1'-0"

VERIFY WITH ENGINEERING

VERIFY WITH ENGINEERING

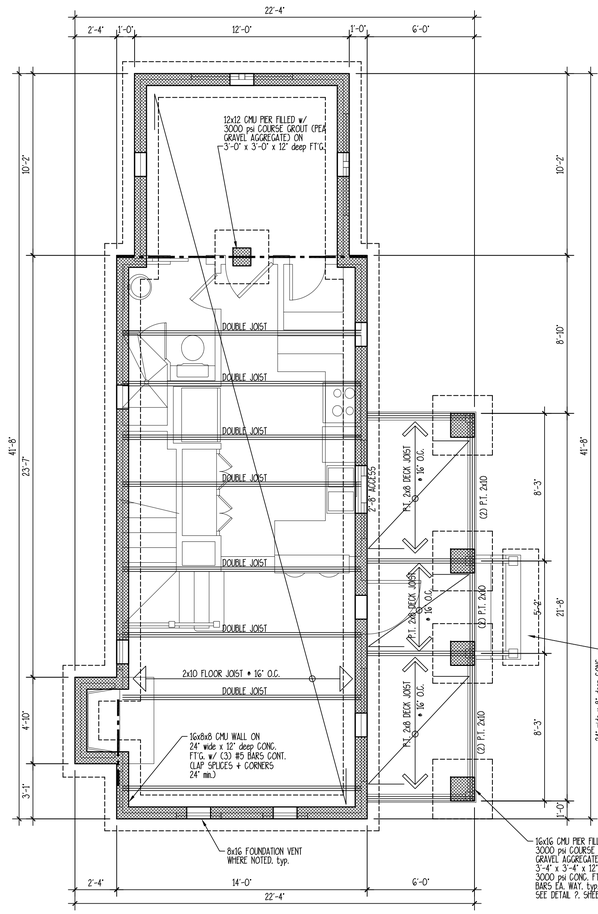

FOUNDATION PLAN

SCALE: 1/4" = 1'-0"

CARSON HOUSE
C0528

ALLISON RAMSEY ARCHITECTS, Inc.
Members of the American Institute of Architects
1003 Charles Street
Bellingham, WA 98225
(360) 966-0559
235 S. Liberty Street
Aspen, CO 81611
(303) 350-1266
www.allisonramseyarchitect.com

THIS PLAN HAS BEEN PREPARED TO MEET CRP PROFESSIONAL STANDARDS AND PRACTICES. HOWEVER, BUILDING CODES AND ENVIRONMENTAL CONDITIONS VARY FOR DIFFERENT LOCATIONS. IT IS THE RESPONSIBILITY OF THE PURCHASER OF THIS PLAN TO PERFORM THE FOLLOWING BEFORE BEGINNING CONSTRUCTION. ALLISON RAMSEY ARCHITECTS, INC. ASSUMES NO LIABILITY FOR ANY ERRORS, OMISSIONS, OR CONSTRUCTION PRACTICES.

- VERIFY ALL DIMENSIONS PRIOR TO PROCEEDING WITH CONSTRUCTION
- VERIFY COMPLIANCE WITH ALL LOCAL CODES
- PLANS INDICATE LOCATIONS ONLY; ENGINEERING ASPECTS SHOULD INCORPORATE ACTUAL SITE CONDITIONS
- ALL ELECTRICAL DETAILS ARE NOT INCLUDED. THESE SHOULD BE OBTAINED FROM A LOCAL MECH. CONTRACTOR OR ENGINEER TO ENSURE COMPLIANCE WITH LOCAL CODE AND THAT EQUIPMENT IS SIZED CORRECTLY FOR YOUR PARTICULAR REGION AND CONDITIONS.
- VERIFY ALL STRUCTURAL ELEMENTS WITH LOCAL ENGINEER AND/OR ARCHITECT.

DATE:	11/23/2005
JOB NO.	053312
DWN. BY:	AMR
DRAWING NAME	053312.DWG

Copyright © 2005 by Allison Ramsey Architects, Inc. All rights reserved.

1

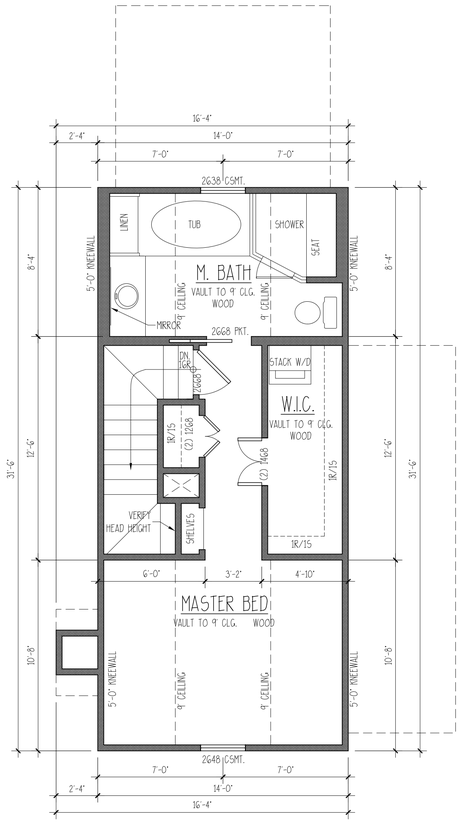

NOTES:
1. WINDOW MFG. TO VERIFY EGRESS WINDOWS AND HARDWARE AS PER LOCAL CODES.

SECOND FLOOR PLAN

SCALE: 1/4" = 1'-0"

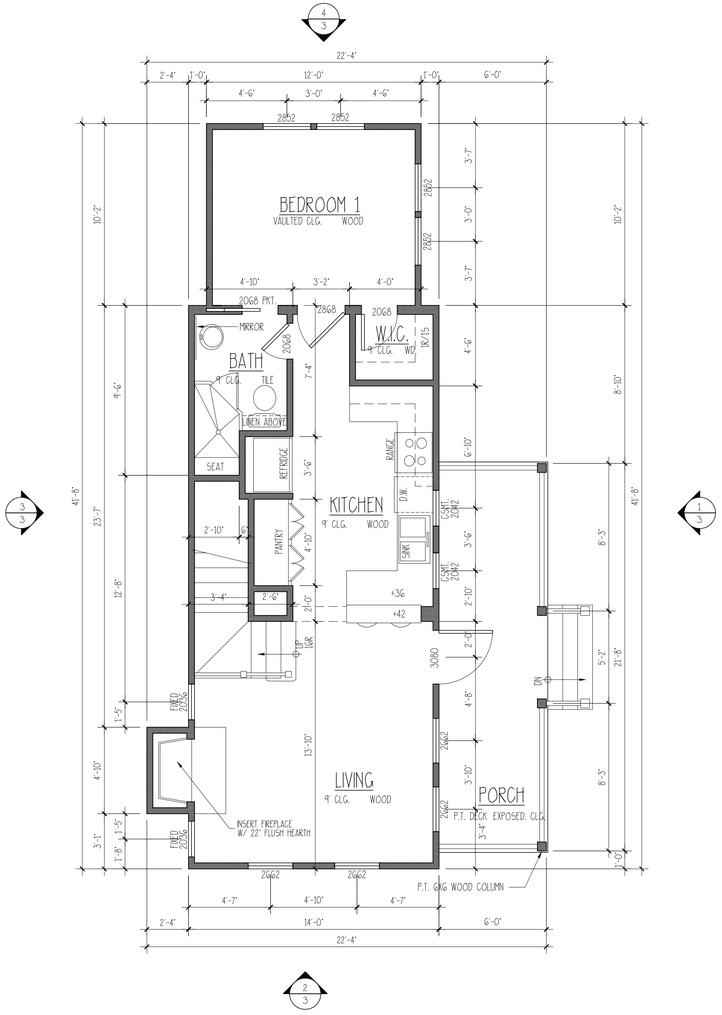

FIRST FLOOR PLAN

SCALE: 1/4" = 1'-0"

CARSON HOUSE
C0528

ALLISON RAMSEY ARCHITECTS Inc.
Members of the American Institute of Architects
1003 Charles Street
Beaufort, SC 29902
(843) 986-0559
235 S. Liberty Street
Asheville, NC 28801
(828) 350-1286
www.allisonramseyarchitect.com

THIS PLAN HAS BEEN PREPARED TO MEET TOP PROFESSIONAL STANDARDS AND PRACTICES. HOWEVER, BUILDING CODES AND ENVIRONMENTAL CONDITIONS VARY FOR DIFFERENT LOCATIONS. IT IS THE RESPONSIBILITY OF THE PURCHASER OF THIS PLAN TO PERFORM THE FOLLOWING BEFORE BEGINNING CONSTRUCTION. ALLISON RAMSEY ARCHITECTS, INC. ASSUMES NO LIABILITY FOR ANY HOME CONSTRUCTED FROM THIS PLAN.

-VERIFY ALL DIMENSIONS PRIOR TO PROCEEDING WITH CONSTRUCTION
-VERIFY COMPLIANCE WITH ALL LOCAL CODES
-PLANS INDICATE LOCATIONS ONLY; ENGINEERING ASPECTS SHOULD INCORPORATE ACTUAL SITE CONDITIONS.
-HVAC + PLUMBING LAYOUTS ARE NOT INCLUDED. THESE SHOULD BE OBTAINED FROM A LOCAL MECH. CONTRACTOR OR ENGINEER TO ENSURE COMPLIANCE WITH LOCAL CODE AND THAT ELEMENTS SUITED CORRECTLY FOR YOUR PARTICULAR REGION AND CONDITIONS.
-VERIFY ALL STRUCTURAL ELEMENTS WITH LOCAL ENGINEER AND/OR ARCHITECT.

DATE:	10/20/2005
JOB NO.	053312
DWN. BY:	AMR
DRAWING NAME	053312.DWG

Copyright © 2005 by Allison Ramsey Architects, Inc. All rights reserved.

2

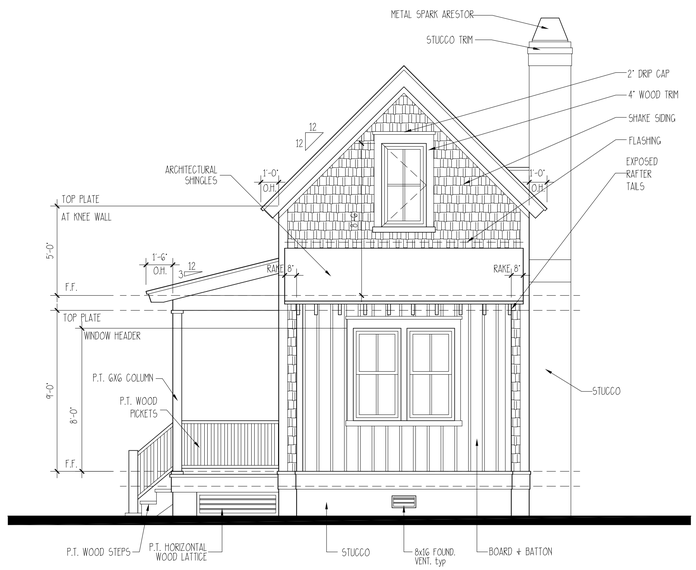

4 RIGHT ELEVATION

SCALE: 1/4" = 1'-0"

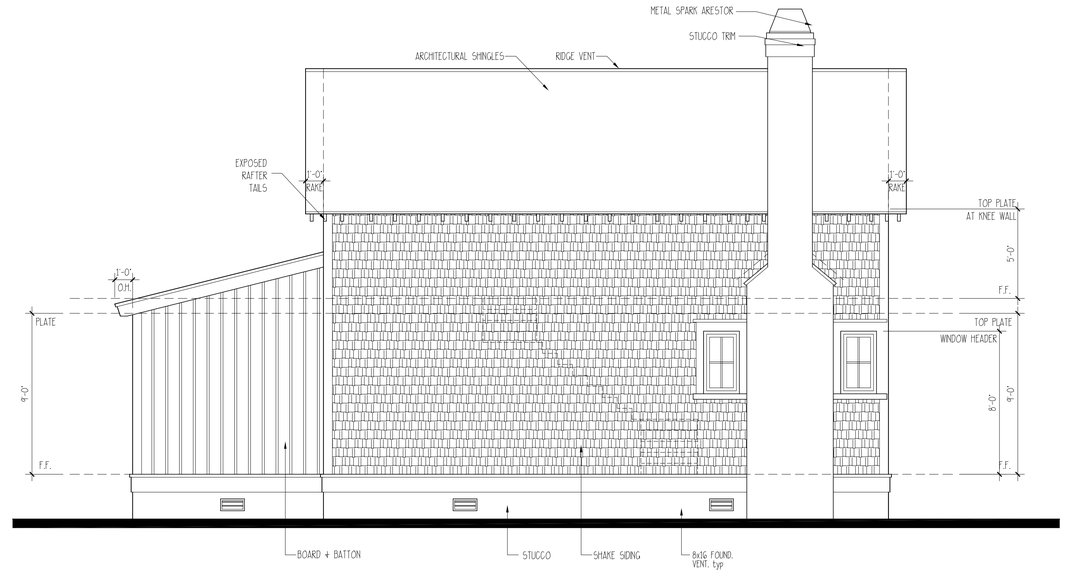

3 REAR ELEVATION

SCALE: 1/4" = 1'-0"

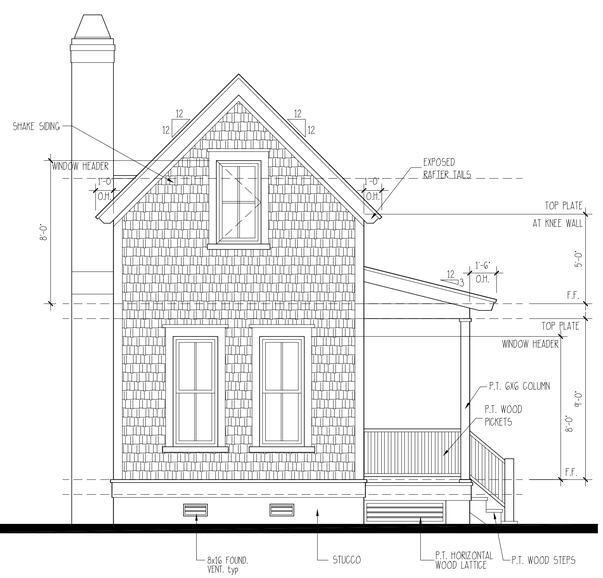

2 LEFT ELEVATION

SCALE: 1/4" = 1'-0"



1 FRONT ELEVATION

SCALE: 1/8" = 1'-0"

CARSON HOUSE
C0528

ALLISON RAMSEY ARCHITECTS, inc.
Members of the American Institute of Architects

1003 Charles Street
Beaufort, SC 29902
(843) 986-0559

235 S. Liberty Street
Asheville, NC 28801
(828) 350-1266
www.allisonramseyarchitect.com

THIS PLAN HAS BEEN PREPARED TO MEET TOP PROFESSIONAL STANDARDS AND PRACTICES. HOWEVER, BUILDING CODES, AND ENVIRONMENTAL CONDITIONS VARY FOR DIFFERENT LOCATIONS. IT IS THE RESPONSIBILITY OF THE CONTRACTOR OF THIS PLAN TO PERFORM THE FOLLOWING BEFORE BEGINNING CONSTRUCTION. ALLISON RAMSEY ARCHITECTS, INC. ASSUMES NO LIABILITY FOR ANY HOME CONSTRUCTED FROM THIS PLAN.

-VERIFY ALL DIMENSIONS PRIOR TO PROCEEDING WITH CONSTRUCTION
-VERIFY COMPLIANCE WITH ALL LOCAL CODES
-FLOOR TRUSS LOCATIONS ONLY, ENGINEERING ASPECTS SHOULD BE CORPORATE
-ALL PLUMBING LAYOUTS ARE NOT INCLUDED. THESE SHOULD BE OBTAINED FROM A LOCAL MECH. CONTRACTOR OR ENGINEER TO ENSURE COMPLIANCE WITH ALL LOCAL CODE
-HVAC & PLUMBING LAYOUTS ARE NOT INCLUDED. THESE SHOULD BE OBTAINED FROM A LOCAL MECH. CONTRACTOR OR ENGINEER TO ENSURE COMPLIANCE WITH ALL LOCAL CODE
-VERIFY ALL STRUCTURAL ELEMENTS WITH LOCAL ENGINEER AND/OR ARCHITECT

DATE:	11/23/2005
JOB NO.	053312
DWN. BY:	AMR
DRAWING NAME	053312.DWG

Copyright © 2005 by Allison Ramsey Architects, Inc. All rights reserved.

KICHLER

Style to live by™



Project	
Type	
Ordering #	
Comments	

Seaside Collection
Seaside 1 Light Outdoor Wall Light in Black
9023BK (Black (Painted))

Product Description:

With an aura that is as pure as a sea breeze, the Seaside Collection offers the homeowner a unique line of outdoor fixtures guaranteed to bring a new identity to your home's landscape. For this 1-light Seaside Wall Lantern, aluminum with stainless steel is combined with Kichler's Black finish, resulting in a high quality fit that will look fantastic for years to come. The fixture houses a 150-watt (max.) bulb that provides outstanding outdoor illumination for your landscape. It is 14 ½" high, is U.L. listed for wet location and is Dark Skies compliant.

Available Finishes
Black (Painted)
Brushed Nickel
Olde Brick
Olde Bronze

Technical Information

Lamp Included:	Not Included
Weight:	4LBS
Lead Wire Length:	9"
Extension:	11.5
Safety Rated:	Wet
HCWO:	8.75
Base Backplate:	4.75"DIA.
Dual Mount:	No
Dark Sky:	Yes
Light Source:	Incandescent
Socket Base:	Medium
Number of Bulbs:	1
Lamp Type:	A
Max Watt:	150W
Width:	10.25"
Height:	14.25"
Overall Height:	"
Collection:	Seaside Collection
Finish:	Black (Painted)

Timberline HD® Shingles

Made to protect your home. Your story. And those of over 50 million of your fellow Americans!



Timberline HD® Shingles Provide These Unique Benefits:

Great Value
Architecturally stylish but practically priced

Dimensional Look
Features GAF proprietary color blends and enhanced shadow effect for a genuine wood-shake look

Highest Roofing Fire Rating
UL Class A, Listed to ANSI/UL 790

High Performance
Designed with Advanced Protection® Shingle Technology, which reduces the use of natural resources while providing excellent protection for your home (visit gaf.com/APS/ to learn more)

Stays in Place
Dura Grip™ Adhesive seals each shingle tightly and reduces the risk of shingle blow-off. Shingles warranted to withstand winds up to 130 mph (209 km/h)[1]

StainGuard® Protection
Helps ensure the beauty of your roof against unsightly blue-green algae[2]

Peace of Mind
Lifetime ltd. transferable warranty with Smart Choice® Protection (non-prorated material and installation labor coverage) for the first ten years[3]

Perfect Finishing Touch
For the best look, use Timbertex® Premium Ridge Cap Shingles or Ridglass® Premium Ridge Cap Shingles[4]

[1]This wind speed coverage requires special installation; see *GAF Shingle & Accessory Ltd. Warranty* for details.
[2]StainGuard® Protection applies only to shingles with StainGuard®-labeled packaging. See *GAF Shingle & Accessory Ltd. Warranty* for complete coverage and restrictions.
[3]See *GAF Shingle & Accessory Ltd. Warranty* for complete coverage and restrictions. The word "Lifetime" refers to the length of coverage provided by the *GAF Shingle & Accessory Ltd. Warranty* and means as long as the original individual owner(s) of a single-family detached residence [or the second owner(s) in certain circumstances] owns the property where the shingles are installed. For owners/structures not meeting the above criteria, Lifetime coverage is not applicable.
[4]These products are not available in all areas. See www.gaf.com/ridgecapavailability for details.

Colors & Availability

Regional Availability

Northeast, Southeast, Southwest, West, and Central Areas



Applicable Standards & Protocols

- UL Listed to ANSI/UL 790 Class A
- Miami-Dade County Product Control approved
- State of Florida approved
- UL 997 modified to 110 mph
- Classified by UL in accordance with ICC-ES AC438
- Meets ASTM D7158, Class H
- Meets ASTM D3161, Class F
- Meets ASTM D3018, Type 1
- Meets ASTM D3462[1]
- ICC-ES Evaluation Reports ESR-1475 and ESR-3267
- Texas Department of Insurance listed
- CSA A123.5[2]
- ENERGY STAR® Certified (White Only) (U.S. Only)
- Rated by the CRRC
- Can be used to comply with Title 24 cool roof requirements
- Meets the cool roof requirements of the Los Angeles Green Building Code (Birchwood, Copper Canyon, Golden Amber, and White Only)

Product/System Specifics[3]

- Fiberglass Asphalt Construction
- Dimensions (approx.): 13 1/4" x 39 3/8" (337 x 1,000 mm)
- Exposure: 5 5/8" (143 mm)
- Bundles/Square: 3
- Pieces/Square: 64
- StainGuard® Protection: Yes[4]
- Hip/Ridge: Timbertex®; Seal-A-Ridge®; Z® Ridge; Ridglass®
- Starter: Pro-Start® & WeatherBlocker™

Installation

Detailed installation instructions are provided on the inside of each bundle wrapper of Timberline HD® Shingles. Installation instructions may also be obtained at gaf.com.

[1]Periodically tested by independent and internal labs to ensure compliance with ASTM D3462 at time of manufacture.
[2]Refers to shingles sold in Canada only.
[3]Refer to complete published installation instructions.
[4]StainGuard® Protection applies only to shingles with StainGuard®-labeled packaging. See *GAF Shingle & Accessory Ltd. Warranty* for complete coverage and restrictions.

Note: It is difficult to reproduce the color clarity and actual color blends of these products. Before selecting your color, please ask to see several full-size shingles.

©2017 GAF 12/17 #875

DOUBLE HUNG

MO (mm)	1-10 (559)	2-2 (660)	2-6 (762)	2-8 (813)	2-10 (864)
RO (mm)	1-10 1/2 (572)	2-2 1/2 (673)	2-6 1/2 (775)	2-8 1/2 (826)	2-10 1/2 (876)
FS (mm)	1-9 1/2 (546)	2-1 1/2 (648)	2-5 1/2 (749)	2-7 1/2 (800)	2-9 1/2 (851)
DLO (mm)	1-3 11/16 (398)	1-7 11/16 (500)	1-11 11/16 (602)	2-1 11/16 (652)	2-3 11/16 (703)
3-0 (914) 3-0 1/4 (921) 2-11 3/4 (908) 1-1 11/16 (348)	(S.O. 1-8 x 2-10) ELDH2236	(S.O. 2-0 x 2-10) ELDH2636	(S.O. 2-4 x 2-10) ELDH3036	(S.O. 2-6 x 2-10) ELDH3236	(S.O. 2-8 x 2-10) ELDH3436
3-4 (1016) 3-4 1/4 (1022) 3-3 3/4 (1010) 1-3 11/16 (398)	(S.O. 1-8 x 3-2) ELDH2240	(S.O. 2-0 x 3-2) ELDH2640	(S.O. 2-4 x 3-2) ELDH3040	(S.O. 2-6 x 3-2) ELDH3240	(S.O. 2-8 x 3-2) ELDH3440
3-8 (1176) 3-8 1/4 (1124) 3-7 3/4 (1111) 1-5 11/16 (449)	(S.O. 1-8 x 3-6) ELDH2244	(S.O. 2-0 x 3-6) ELDH2644	(S.O. 2-4 x 3-6) ELDH3044	(S.O. 2-6 x 3-6) ELDH3244	(S.O. 2-8 x 3-6) ELDH3444
4-0 (1219) 4-0 1/4 (1226) 3-11 3/4 (1213) 1-7 11/16 (500)	(S.O. 1-8 x 3-10) ELDH2248	(S.O. 2-0 x 3-10) ELDH2648	(S.O. 2-4 x 3-10) ELDH3048	(S.O. 2-6 x 3-10) ELDH3248	(S.O. 2-8 x 3-10) ELDH3448
4-4 (1321) 4-4 1/4 (1327) 4-3 3/4 (1314) 1-9 11/16 (551)	(S.O. 1-8 x 4-2) ELDH2252	(S.O. 2-0 x 4-2) ELDH2652	(S.O. 2-4 x 4-2) ELDH3052	(S.O. 2-6 x 4-2) ELDH3252	(S.O. 2-8 x 4-2) ELDH3452
4-8 (1422) 4-8 1/4 (1429) 4-7 3/4 (1416) 1-11 11/16 (602)	(S.O. 1-8 x 4-6) ELDH2256	(S.O. 2-0 x 4-6) ELDH2656	(S.O. 2-4 x 4-6) ELDH3056	(S.O. 2-6 x 4-6) ELDH3256	(S.O. 2-8 x 4-6) ELDH3456
5-0 (1524) 5-0 1/4 (1530) 4-11 3/4 (1518) 2-1 11/16 (652)	(S.O. 1-8 x 4-10) ELDH2260	(S.O. 2-0 x 4-10) ELDH2660	(S.O. 2-4 x 4-10) ELDH3060	(S.O. 2-6 x 4-10) ELDH3260	(S.O. 2-8 x 4-10) ELDH3460
5-4 (1626) 5-4 1/4 (1632) 5-3 3/4 (1619) 2-3 11/16 (703)	(S.O. 1-8 x 5-2) ELDH2264	(S.O. 2-0 x 5-2) ELDH2664	(S.O. 2-4 x 5-2) ELDH3064	(S.O. 2-6 x 5-2) ELDH3264	(S.O. 2-8 x 5-2) ELDH3464
5-8 (1727) 5-8 1/4 (1734) 5-7 3/4 (1721) 2-5 11/16 (754)	(S.O. 1-8 x 5-6) ELDH2268	(S.O.2-0 x 5-6) ELDH2668	(S.O. 2-4 x 5-6) ELDH3068	(S.O. 2-6 x 5-6) ELDH3268 E	(S.O. 2-8 x 5-6) ELDH3468 E
6-0 (1829) 6-0 1/4 (1835) 5-11 3/4 (1822) 2-7 11/16 (805)	(S.O. 1-8 x 5-10) ELDH2272	(S.O. 2-0 x 5-10) ELDH2672	(S.O. 2-4 x 5-10) ELDH3072	(S.O. 2-6 x 5-10) ELDH3272 E	(S.O. 2-8 x 5-10) ELDH3472 E
6-4 (1930) 6-4 1/4 (1937) 6-3 3/4 (1924) 2-9 11/16 (856)	(S.O. 1-8 x 6-2) ELDH2276	(S.O. 2-0 x 6-2) ELDH2676	(S.O. 2-4 x 6-2) ELDH3076 E	(S.O. 2-6 x 6-2) ELDH3276 E	(S.O. 2-8 x 6-2) ELDH3476 E

DOUBLE HUNG

MO (mm)	3-0 (914)	3-2 (965)	3-6 (1067)	4-0 (1219)	4-6 (1372)
RO (mm)	3-0 1/2 (927)	3-2 1/2 (978)	3-6 1/2 (1080)	4-0 1/2 (1232)	4-6 1/2 (1384)
FS (mm)	2-11 1/2 (902)	3-1 1/2 (953)	3-5 1/2 (1054)	3-11 1/2 (1207)	4-5 1/2 (1359)
DLO (mm)	2-5 11/16 (754)	2-7 11/16 (805)	2-11 11/16 (906)	3-5 11/16 (1059)	3-11 11/16 (1211)

		(S.O. 2-10 x 2-10)	ELDH3636	(S.O. 3-0 x 2-10)	ELDH3836	(S.O. 3-4 x 2-10)	ELDH4236	(S.O.3-10 x 2-10)	ELDH4836	(S.O. 4-4 x 2-10)	ELDH5436
		(S.O. 2-10 x 3-2)	ELDH3640	(S.O. 3-0 x 3-2)	ELDH3840	(S.O. 3-4 x 3-2)	ELDH4240	(S.O. 3-10 x 3-2)	ELDH4840	(S.O. 4-4 x 3-2)	ELDH5440
		(S.O. 2-10 x 3-6)	ELDH3644	(S.O. 3-0 x 3-6)	ELDH3844	(S.O. 3-4 x 3-6)	ELDH4244	(S.O. 3-10 x 3-6)	ELDH4844	(S.O. 4-4 x 3-6)	ELDH5444
		(S.O. 2-10 x 3-10)	ELDH3648	(S.O. 3-0 x 3-10)	ELDH3848	(S.O. 3-4 x 3-10)	ELDH4248	(S.O. 3-10 x 3-10)	ELDH4848	(S.O. 4-4 x 3-10)	ELDH5448
		(S.O. 2-10 x 4-2)	ELDH3652	(S.O. 3-0 x 4-2)	ELDH3852	(S.O. 3-4 x 4-2)	ELDH4252	(S.O. 3-10 x 4-2)	ELDH4852	(S.O. 4-4 x 4-2)	ELDH5452
		(S.O. 2-10 x 4-6)	ELDH3656	(S.O. 3-0 x 4-6)	ELDH3856	(S.O. 3-4 x 4-6)	ELDH4256	(S.O. 3-10 x 4-6)	ELDH4856	(S.O. 4-4 x 4-6)	ELDH5456
		(S.O. 2-10 x 4-10)	ELDH3660 E	(S.O. 3-0 x 4-10)	ELDH3860 E	(S.O. 3-4 x 4-10)	ELDH4260 E	(S.O. 3-10 x 4-10)	ELDH4860 E	(S.O. 4-4 x 4-10)	ELDH5460 E
		(S.O. 2-10 x 5-2)	ELDH3664 E	(S.O. 3-0 x 5-2)	ELDH3864 E	(S.O. 3-4 x 5-2)	ELDH4264 E	(S.O. 3-10 x 5-2)	ELDH4864 E	(S.O. 4-4 x 5-2)	ELDH5464 E
		(S.O. 2-10 x 5-6)	ELDH3668 E	(S.O. 3-0 x 5-6)	ELDH3868 E	(S.O. 3-4 x 5-6)	ELDH4268 E	(S.O. 3-10 x 5-6)	ELDH4868 E	(S.O. 4-4 x 5-6)	ELDH5468 E
		(S.O. 2-10 x 5-10)	ELDH3672 E	(S.O. 3-0 x 5-10)	ELDH3872 E	(S.O. 3-4 x 5-10)	ELDH4272 E	(S.O. 3-10 x 5-10)	ELDH4872 E	(S.O. 4-4 x 5-10)	ELDH5472 E
		(S.O. 2-10 x 6-2)	ELDH3676 E	(S.O. 3-0 x 6-2)	ELDH3876 E	(S.O. 3-4 x 6-2)	ELDH4276 E	(S.O. 3-10 x 6-2)	ELDH4876 E	(S.O. 4-4 x 6-2)	ELDH5476 E

3-0 (914)	3-4 (1016)	3-8 (1176)	4-0 (1219)	4-4 (1321)	4-8 (1422)	5-0 (1524)	5-4 (1626)	5-8 (1727)	6-0 (1829)		
3-0 1/4 (921)	3-4 1/4 (1022)	3-8 1/4 (1124)	4-0 1/4 (1226)	4-4 1/4 (1327)	4-8 1/4 (1429)	5-0 1/4 (1530)	5-4 1/4 (1632)	5-8 1/4 (1734)	6-0 1/4 (1835)		
2-11 3/4 (908)	3-3 3/4 (1010)	3-7 3/4 (1111)	3-11 3/4 (1213)	4-3 3/4 (1314)	4-7 3/4 (1416)	4-11 3/4 (1518)	5-3 3/4 (1619)	5-7 3/4 (1721)	5-11 3/4 (1822)		
1-1 11/16 (348)	1-3 11/16 (398)	1-5 11/16 (449)	1-7 11/16 (500)	1-9 11/16 (551)	1-11 11/16 (602)	2-1 11/16 (652)	2-3 11/16 (703)	2-5 11/16 (754)	2-7 11/16 (805)	2-9 11/16 (856)	6-4 (1930)
											6-4 1/4 (1937)
											6-3 3/4 (1924)

Details and Elevations not to scale.

Special sized units available within and outside of CN matrix. Please contact your Marvin dealer.

Minimum frame size: 17 1/2" x 27 3/4"

Maximum frame size: 53 1/2" x 83 3/4"

Optional Double Hung GBGs and SDLs are available in a standard Rectangular cut shown. Other available lite cuts shown on page 3.

When ordering 6 9/16" (167 mm) or 6 13/16" (173 mm) jambs, add 1/4" (6 mm) to width and 1/8" (3 mm) to height for Rough Opening, Frame Size and Masonry Opening.

E = These windows meet National Egress Codes for fire evacuation. Local codes may differ.

Available in equal, cottage, and reverse cottage sash configurations. Cottage and reverse cottage sash configurations are not available below CN 36 height and above CN 68 height.

For further details and drawings visit the 'Tools and Documents' section at Marvin.com.

MULTIPLE ASSEMBLIES

Multiple assemblies can be factory mulled.

MAXIMUM ROUGH OPENING not to exceed 113 1/2" x 76 1/4" Maximum up to 5 units wide by 1 unit high.

MAXIMUM ROUGH OPENING not to exceed 84" x 92" Maximum up to 3 units wide by 5 units high.

Field mull kits are available. Structural mullion reinforcement is required for some assemblies.

Please consult your local Marvin representative for more information.

CASEMENT

MO (mm)	1-4 1/2 (419)	1-8 1/2 (521)	2-0 1/2 (622)	2-4 1/2 (724)	2-8 1/2 (826)	3-0 1/2 (927)
RO (mm)	1-5 (432)	1-9 (533)	2-1 (635)	2-5 (737)	2-9 (838)	3-1 (940)
FS (mm)	1-4 (406)	1-8 (508)	2-0 (610)	2-4 (711)	2-8 (813)	3-0 (914)
DLO (mm)	0-10 25/32 (274)	1-2 25/32 (376)	1-6 25/32 (477)	1-10 25/32 (579)	2-2 25/32 (680)	2-6 25/32 (782)
2-7 3/8 (797) 2-7 5/8 (803) 2-7 1/8 (791) 2-1 29/32 (658)	 ELCA1731	 ELCA2131	 ELCA2531	 ELCA2931	 ELCA3331	 ELCA3731
2-11 3/8 (898) 2-11 5/8 (905) 2-11 1/8 (892) 2-5 29/32 (760)	 ELCA1735	 ELCA2135	 ELCA2535	 ELCA2935	 ELCA3335	 ELCA3735 E*
3-3 3/8 (1000) 3-3 5/8 (1006) 3-3 1/8 (994) 2-9 29/32 (861)	 ELCA1739	 ELCA2139	 ELCA2539	 ELCA2939	 ELCA3339	 ELCA3739 E*
3-7 1/2 (1105) 3-7 3/4 (1111) 3-7 1/4 (1099) 3-2 1/32 (966)	 ELCA1743	 ELCA2143	 ELCA2543	 ELCA2943 E	 ELCA3343 E	 ELCA3743 E
3-11 3/8 (1203) 3-11 5/8 (1210) 3-11 1/8 (1197) 3-5 29/32 (1065)	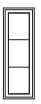 ELCA1747	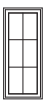 ELCA2147	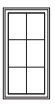 ELCA2547	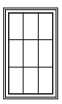 ELCA2947 E	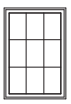 ELCA3347 E	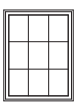 ELCA3747 E
4-7 3/8 (1406) 4-7 5/8 (1413) 4-7 1/8 (1400) 4-1 29/32 (1268)	 ELCA1755	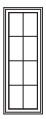 ELCA2155	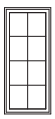 ELCA2555	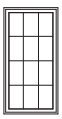 ELCA2955 E	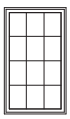 ELCA3355 E	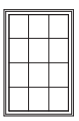 ELCA3755 E
4-11 3/8 (1508) 4-11 5/8 (1514) 4-11 1/8 (1502) 4-5 29/32 (1369)	 ELCA1759	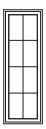 ELCA2159	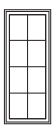 ELCA2559	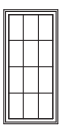 ELCA2959 E	ELCA3359 E	ELCA3759 E
5-3 3/8 (1610) 5-3 5/8 (1616) 5-3 1/8 (1603) 4-9 29/32 (1471)	ELCA1763	ELCA2163	ELCA2563	ELCA2963 E	ELCA3363 E	ELCA3763 E
5-11 3/8 (1813) 5-11 5/8 (1819) 5-11 1/8 (1807) 5-5 29/32 (1674)	ELCA1771 T	ELCA2171 T	ELCA2571 T	ELCA2971 ET	ELCA3371 ET	ELCA3771 ET



4501 (IG)
1501 (SG)
Fir



4537 (IG)
1537 (SG)
Fir



4503 (IG)
1503 (SG)
Fir



4505 (IG)
1505 (SG)
Fir



4508 (IG)
1508 (SG)
Maple



4509 (IG)
1509 (SG)
Ash



4510 (IG)
1510 (SG)
Primed



4515 (IG)
1515 (SG)
Birch



401 (IG)
501 (SG)
Walnut



410 (IG)
510 (SG)
Pine

SIMULATE 4 DIVIDED LITE WITH SPACER BAR



412 (IG)
512 (SG)
Walnut



4597 (IG)
1597 (SG)
Fir

SG: Single Pane Glass **IG:** Insulated Glass

614 Prince Street

STAFF REPORT: 614 Prince Street - FINAL Approval

DATE: 11/08/23

GENERAL INFORMATION	
Applicant:	**Lauren Kelly on behalf of Tidewater Way LLC**
Site Location/Address:	**614 Prince Street; R120 004 000 1030 0000**
Applicant's Request:	**The applicant is requesting final approval for construction of a new single-family residence at 614 Prince Street.**
Current Zoning:	**T4-N**

ZONING DISTRICT INFORMATION	
	T4-N
Lot Width at Setback:	**N/A**
Max Lot Coverage:	**70%**
Min. Frontage Build Out	**60% min., 85% max.**
Front Setback	**0' min., 15' max.**
Side Setback (Interior)	**5' min.**
Rear Setback	**0' alley, 10' no alley**
Building Height:	**3.5 stories max**

SURROUNDING ZONING, LAND USE AND REQUIRED BUFFERS		
Adjacent Zoning	**Adjacent Land Uses**	**Setbacks for Adjacent Zoning /Buffer required if rezoned**
North: T4-HN	**Historic Homes**	**N/A**
South: T4- HN	**Homes**	**N/A**
East: T4-HN	**Homes**	**N/A**
West: T4-N	**Commercial**	**N/A**

Background: The applicant is requesting final approval to construct a new single-family residence on a narrow lot at 614 Prince Street in the Point neighborhood. There is no existing structure on the property. This project was first submitted at the October 11, 2023 HRTC meeting and the applicants have been cooperative. Staff supports the proposed construction.

FINDINGS AND RECOMMENDATIONS
Staff Recommendation:

Staff recommends Final approval of the proposed new construction at 614 Prince Street in that it satisfies the intent of the Beaufort Preservation Manual and requirements of the Beaufort Code, with the following conditions:

1. **Staff is supportive of this project and believes this is an appropriate infill project for the historic district.**

2. **Applicant to add a note in the drawings that the windows and doors are to have exterior SDL grilles and spacer bars between the glass.**

3. **This property is in a T4-N zoning classification, and the front setback requirements per Section 2.4.1 are 0' min. and 15' max. The front wall is currently set roughly 28' from the property line, which is not allowed in this zoning classification. However, Section 2.5.2 states, "The minimum setbacks required may be reduced for infill lots where existing development on the block does not match the current standards in Section 2.4.1. Setbacks for such lots shall either match an existing adjacent setback or use the calculated average setback of the adjacent lots." Staff believes that the building location is consistent with the neighboring historic structures and believes that section 2.5.2 is applicable to this property. Staff recommends pushing the structure closer to the street by 1-2 feet to provide a step back on the streetscape between the commercial corridor and historic residential structures.**

4. **Per Section 2.5.6.C, chimneys may encroach up to 2' into any required yard. Applicant to confirm that the chimney footprint is compliant with this code section.**

5. **Applicant to label and dimension building setbacks on the site plan to ensure compliance with section 2.4.1.B.**

6. **Applicant to provide lot coverages to ensure compliance with section 2.4.1.A.3.**

7. **Applicant noted in the project narrative that the owner may install a fence. If so, the applicant must provide a drawing of the fence and note on a site plan where the fence will be located.**

8. **Applicant to note on the drawings that the stucco coat on the foundation shall have a**

smooth finish.

DEVELOPMENT REVIEW PROCESS
HISTORIC REVIEW BOARD APPLICATION
Community Development Department
1911 Boundary Street, Beaufort, South Carolina, 29902
p. (843) 525-7011 / f. (843) 986-5606
Email: development@cityofbeaufort.org / website: www.cityofbeaufort.org

☐ Staff Review
☐ Board Review

Application Fee:
see attached schedule

OFFICE USE ONLY: **Date Filed:** **Application #:** **Zoning District:**
BCAGHS Survey: ☐ **Yes** ☐ **No**

Schedule: The Historic Review Board (HRB) typically meets the 2nd Wednesday of each month at 2pm. The complete schedule, along with the list of deadlines, may be found here - http://cityofbeaufort.org/372/Historic-District-Review-Board

Submittal Requirements: All forms and information shall be submitted digitally + 5 hardcopies of all documents. In addition to a complete applicationform, applicants shall submit the required items according to the checklists on the subsequent page.

Review Request: ☐ Conceptual ☐ Preliminary ☑ Final ☐ Bailey Bill Approval* ☐ Change After Certification
**Requires a Bailey Bill – Part A Preliminary Review Application Form*

Pursuant to Section 6-29-1145 of the South Carolina Code of Laws, is this tract or parcel restricted by any recorded covenant thatis contrary to, conflicts with, or prohibits the activity described in this application? ☐ **Yes** ☑ **No**

Applicant, Property, and Project Information

Applicant Name: Lauren Kelly

Applicant Address: 17 Market #2, Beaufort, SC 29906

Applicant E-mail: lauren@moserdesigngroup.com Applicant Phone Number: 843-379-5630

Applicant Title: ☐ Homeowner ☐ Tenant ☑ Architect ☐ Engineer ☐ Developer

Owner (if other than the Applicant): Tidewater Way LLC

Owner Address: 311 Carteret Street, Beaufort, SC 29902

Project Name: 614 Prince Street Cottage

Property Address: 614 Prince Street, Beaufort, SC 29902

Property Identification Number *(Tax Map & Parcel Number)*: R120-004-000-1030-0000

Date Submitted: 10/30/23

Certification of Correctness: I/we certify that the information in this application is correct.

Applicant's Signature: Date: 10/30/23

Owner's Signature: Date:

(The owner's signature is required if the applicant is not the owner.)

DEVELOPMENT REVIEW PROCESS
HISTORIC REVIEW BOARD APPLICATION
Community Development Department
1911 Boundary Street, Beaufort, South Carolina, 29902
p. (843) 525-7011 / f. (843) 986-5606
Email: development@cityofbeaufort.org / website: www.cityofbeaufort.org

☐ Staff Review
☐ Board Review

Application Fee:
see attached schedule

Required Project Information

Project Name: 614 Prince Street cottage

Property Size in Acres: 0.09 ac Proposed Building Use: single family residential

Nature of Work (check all that apply):

■ New Construction, Primary Structure ¨ New Construction, Primary Structure ¨ Alterations / Additions

☐ Demolition* ¨ Relocation* **Demolition and Relocation requires a public hearing*

Building Square Footage (if multiple buildings, please list each one and their square footage by floor):

Is this project a redevelopment project? ☐ Y ☑ N

Are there existing buildings on the site? ☐ Y ☑ N if yes, will they remain? ☐ Y ☐ N

Provide a brief Project Narrative (if requesting Bailey Bill Approval, this section may be left blank):

This is a proposed cottage on the narrow lot at 614 Prince Street. It's zoned T4-N so has 5' side setbacks. It is sited to be in line with the adjacent contributing structure. There are a number of scrub trees on the east side of the parcel which are proposed to be removed. There are no significant trees. The owner wouldlike to have screening fencing/landscaping (TBD). on the west side to screen the property from the adjacent parking lot. Parking will be tandem for 2 cars on a pervious driveway on the east side of the lot. The cottage will be elevated to 13' NAVD, about 4' above existing grade. Mechanical equipment will be located on the rear of the building and will be screened.

CONTACT INFORMATION:

Attention: Julie A. Bachety, Administrative Assistant II

City of Beaufort Community Development Department

1911 Boundary Street, Beaufort, South Carolina 29902

E-Mail: development@cityofbeaufort.org | Phone: (843) 525-7011 | Fax: (843) 986-5606

DEVELOPMENT REVIEW PROCESS
HISTORIC REVIEW BOARD APPLICATION

Community Development Department
1911 Boundary Street, Beaufort, South Carolina, 29902
p. (843) 525-7011 / f. (843) 986-5606
Email: development@cityofbeaufort.org / website: www.cityofbeaufort.org

☐ Staff Review
☐ Board Review

Application Fee:
see attached schedule

OFFICE USE ONLY: Date Filed: Application #: Zoning District:
BCAGHS Survey: ☐ Yes ☐ No

Schedule: The Historic Review Board (HRB) typically meets the 2nd Wednesday of each month at 2pm. The complete schedule, along with the list of deadlines, may be found here - http://cityofbeaufort.org/372/Historic-District-Review-Board

Submittal Requirements: All forms and information shall be submitted digitally + 5 hardcopies of all documents. In addition to a complete applicationform, applicants shall submit the required items according to the checklists on the subsequent page.

Review Request: ☐ Conceptual ☐ Preliminary ☑ Final ☐ Bailey Bill Approval* ☐ Change After Certification
**Requires a Bailey Bill – Part A Preliminary Review Application Form*

Pursuant to Section 6-29-1145 of the South Carolina Code of Laws, is this tract or parcel restricted by any recorded covenant thatis contrary to, conflicts with, or prohibits the activity described in this application? ☐ Yes ☑ No

Applicant, Property, and Project Information

Applicant Name: Lauren Kelly
Applicant Address: 17 Market #2, Beaufort, SC 29906
Applicant E-mail: lauren@moserdesigngroup.com Applicant Phone Number: 843-379-5630

Applicant Title: ☐ Homeowner ☐ Tenant ☑ Architect ☐ Engineer ☐ Developer

Owner (if other than the Applicant): Tidewater Way LLC
Owner Address: 311 Carteret Street, Beaufort, SC 29902

Project Name: 614 Prince Street Cottage
Property Address: 614 Prince Street, Beaufort, SC 29902
Property Identification Number *(Tax Map & Parcel Number)*: R120-004-000-1030-0000
Date Submitted: 10/30/23

Certification of Correctness: I/we certify that the information in this application is correct.

Applicant's Signature: Date: 10/30/23
Owner's Signature: Date: 10-30-23

(The owner's signature is required if the applicant is not the owner.)

Siding: Pure White SW 7005
Smooth Hardie Lap Siding

Trim: Pure White SW 7005
Smooth Hardie

Shutters: Charleston Green DCR 099
Composite w/ Operable hardware

Doors & indows: Pure White SW 7005 - Marvin Elevate | PT Charleston Green Screened Door



Foundation & Chimney: Savannah Gray Thin Brick, Ivory Buff mortar

Foundation Underpinning: PT Wood, Charleston Green DCR 099

Roof: Standing Seam Colonial Red (or to match Contributing Structure at 609 Prince)

17 Market #2, Beaufort, SC 29906 | 843-379-5630 | MoserDesignGroup.com | info@moserdesigngroup.com

4M metals

201 Red Oaks Way • Ridgeland, SC 29936

Telephone: 843.208.2433 • Fax: 843.208.2430

Website: www.4mmetals.com

Environmentally Smart Colors—Designed Energy Efficient



Metallic Colors



Non-Painted

Weathered Colors

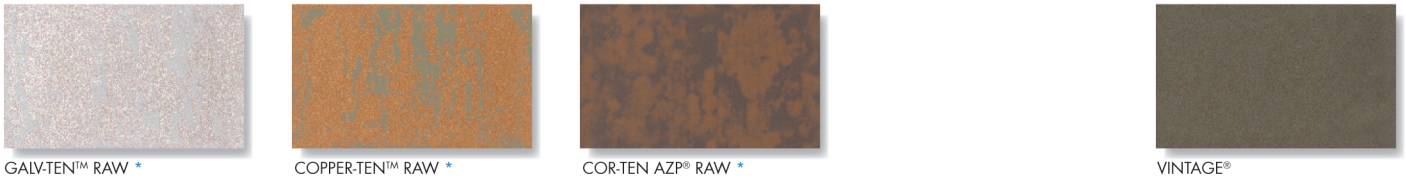

* Available at a slight price premium.

* Also available in Robust.

Colors shown are matched as accurately as possible, but may vary slightly from finished product. These rich and vibrant colors are produced with either Kynar 500® or Hylar 5000® resins, which provide superior color retention and allow Sheffield Metals to offer non-prorated coating warranties for most applications. Coating warranty varies for Regal Red, Matte Black, Copper, Champagne, Silver, and Pre-Weathered Galvalume. Steelscape's Vintage carries a 20 year Finish Warranty. Please contact your representative for more information.

A-SERIES DOUBLE-HUNG WINDOWS

ANDERSEN™ WINDOWS & DOORS

Table of Double-Hung Window Sizes

Scale 1/8" (3) = 1'-0" (305) – 1:96

Notes on the next page also apply to this page.

Unit Dimension	1'-7 1/4" (489)	1'-11 1/4" (591)	2'-3 1/4" (692)	2'-5 1/4" (743)	2'-7 1/4" (794)	2'-9 1/4" (845)	2'-11 1/4" (895)	3'-1 1/4" (946)	3'-3 1/4" (997)	3'-7 1/4" (1099)	3'-11 1/4" (1200)
Minimum Rough Opening	1'-8" (508)	2'-0" (610)	2'-4" (711)	2'-6" (762)	2'-8" (813)	2'-10" (864)	3'-0" (914)	3'-2" (965)	3'-4" (1016)	3'-8" (1118)	4'-0" (1219)
Unobstructed Glass (lower sash only)	12 5/8" (321)	16 5/8" (422)	20 5/8" (524)	22 5/8" (575)	24 5/8" (625)	26 5/8" (676)	28 5/8" (727)	30 5/8" (778)	32 5/8" (829)	36 5/8" (930)	40 5/8" (1032)

2:3 cottage or 3:2 reverse cottage sash ratio available for all standard widths and heights up to 6'-7 1/4". (2013)

CUSTOM WIDTHS – 1'-3 1/4" to 3'-11 1/4"

CUSTOM HEIGHTS – 2'-3 1/4" to 7'-11 1/4"

2'-11 1/4" (895) 3'-0" (914) 12 13/16" (325)	ADH1830	ADH2030	ADH2430	ADH2630	ADH2830	ADH21030	ADH3030	ADH3230	ADH3430	ADH3830*	ADH4030*
3'-3 1/4" (997) 3'-4" (1016) 14 13/16" (376)	ADH1834	ADH2034	ADH2434	ADH2634	ADH2834	ADH21034	ADH3034	ADH3234	ADH3434	ADH3834*	ADH4034*
3'-7 1/4" (1099) 3'-8" (1118) 16 13/16" (427)	ADH1838	ADH2038	ADH2438	ADH2638	ADH2838	ADH21038	ADH3038	ADH3238	ADH3438	ADH3838*	ADH4038*
3'-11 1/4" (1200) 4'-0" (1219) 18 13/16" (478)	ADH1840	ADH2040	ADH2440	ADH2640	ADH2840	ADH21040	ADH3040	ADH3240	ADH3440	ADH3840*	ADH4040*
4'-3 1/4" (1302) 4'-4" (1321) 20 13/16" (529)	ADH1844	ADH2044	ADH2444	ADH2644	ADH2844	ADH21044	ADH3044	ADH3244	ADH3444	ADH3844*	ADH4044*
4'-7 1/4" (1403) 4'-8" (1422) 22 13/16" (579)	ADH1848	ADH2048	ADH2448	ADH2648	ADH2848	ADH21048	ADH3048	ADH3248	ADH3448	ADH3848*	ADH4048*
4'-11 1/4" (1505) 5'-0" (1524) 24 13/16" (630)	ADH1850	ADH2050	ADH2450	ADH2650	ADH2850	ADH21050	ADH3050	ADH3250◊	ADH3450◊	ADH3850◊*	ADH4050◊*
5'-3 1/4" (1607) 5'-4" (1626) 26 13/16" (681)	ADH1854	ADH2054	ADH2454	ADH2654	ADH2854	ADH21054	ADH3054◊	ADH3254◊	ADH3454◊	ADH3854◊*	ADH4054◊*
5'-7 1/4" (1708) 5'-8" (1727) 28 13/16" (732)	ADH1858	ADH2058	ADH2458	ADH2658	ADH2858	ADH21058◊	ADH3058◊	ADH3258◊	ADH3458◊	ADH3858◊*	ADH4058◊*
5'-11 1/4" (1810) 6'-0" (1829) 30 13/16" (783)	ADH1860	ADH2060	ADH2460	ADH2660	ADH2860◊	ADH21060◊	ADH3060◊	ADH3260◊	ADH3460◊	ADH3860◊*	ADH4060◊*
6'-3 1/4" (1911) 6'-4" (1930) 32 13/16" (833)	ADH1864	ADH2064	ADH2464	ADH2664◊	ADH2864◊	ADH21064◊	ADH3064◊	ADH3264◊	ADH3464◊	ADH3864◊*	ADH4064◊◆*

Cottage (2:3) Reverse Cottage (3:2)

continued on next page

A-SERIES DOUBLE-HUNG WINDOWS

ANDERSEN WINDOWS & DOORS

Table of Double-Hung Window Sizes *(continued)*

Scale 1/8" (3) = 1'-0" (305) – 1:96

Unit Dimension	1'-7 1/4" (489)	1'-11 1/4" (591)	2'-3 1/4" (692)	2'-5 1/4" (743)	2'-7 1/4" (794)	2'-9 1/4" (845)	2'-11 1/4" (895)	3'-1 1/4" (946)	3'-3 1/4" (997)	3'-7 1/4" (1099)	3'-11 1/4" (1200)
Minimum Rough Opening	1'-8" (508)	2'-0" (610)	2'-4" (711)	2'-6" (762)	2'-8" (813)	2'-10" (864)	3'-0" (914)	3'-2" (965)	3'-4" (1016)	3'-8" (1118)	4'-0" (1219)
Unobstructed Glass (lower sash only)	12 5/8" (321)	16 5/8" (422)	20 5/8" (524)	22 5/8" (575)	24 5/8" (625)	26 5/8" (676)	28 5/8" (727)	30 5/8" (778)	32 5/8" (829)	36 5/8" (930)	40 5/8" (1031)

2:3 cottage or 3:2 reverse cottage sash ratio available for all standard widths and heights up to 6'-7 1/4". (2013)

CUSTOM WIDTHS – 1'-3 1/4" to 3'-11 1/4"

CUSTOM HEIGHTS – 2'-3 1/4" to 7'-11 1/4"

6'-7 1/4" (2013) | 6'-8" (2032) | 34 13/16" (884)

7'-3 1/4" (2216) | 7'-4" (2235) | 38 13/16" (986)

7'-11 1/4" (2419) | 8'-0" (2438) | 42 13/16" (1087)

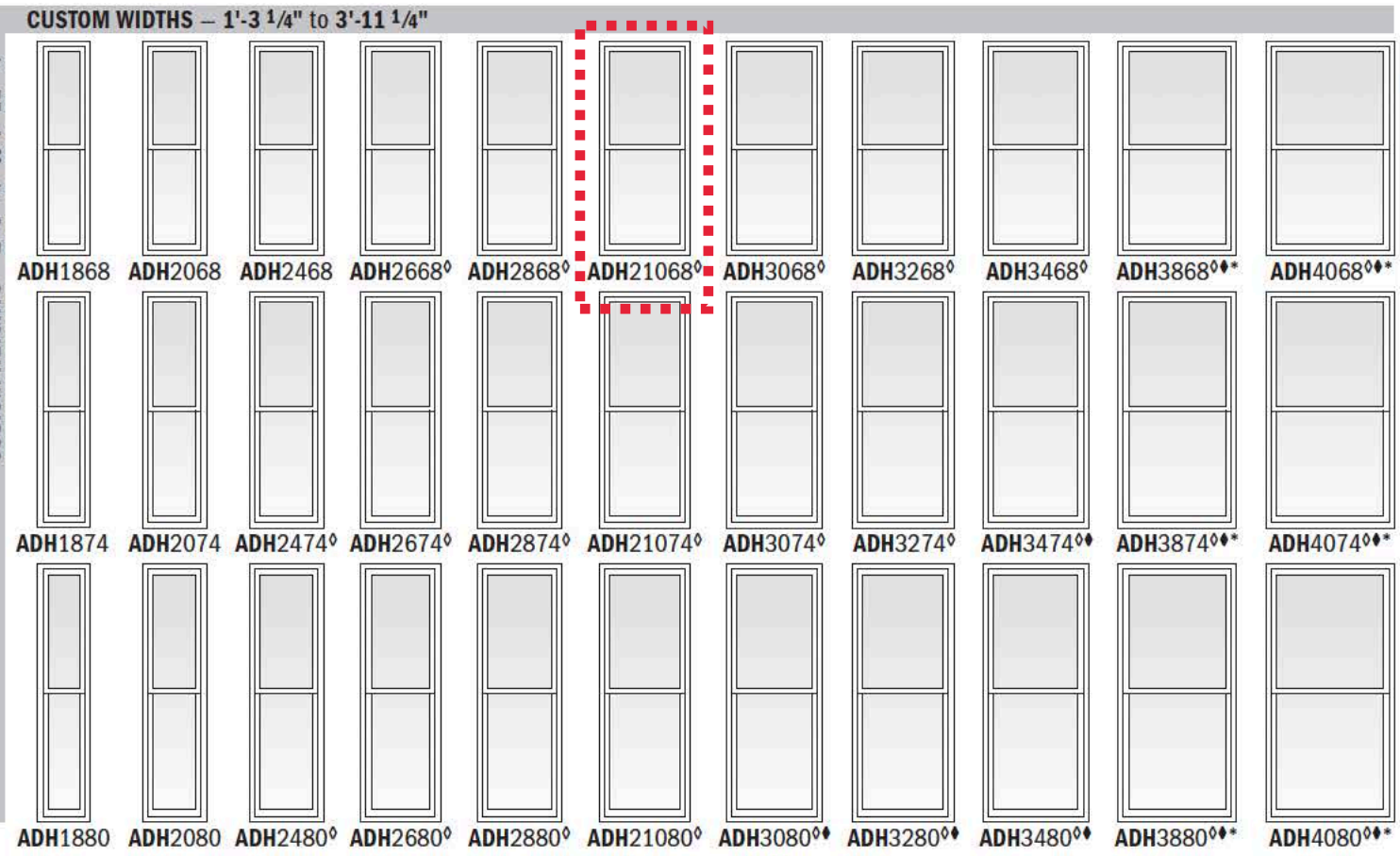

Custom-size windows are available in 1/8" (3) increments.

For windows with dual-pane glass, two locks are standard on windows wider than 3'-3 1/4" (997). For windows with triple-pane glass or Andersen® art glass, two locks are standard on sizes wider than 1'-7 1/8" (486) (all sizes shown).

- "Window Dimension" always refers to outside frame to frame dimension.
- **"Minimum Rough Opening" dimensions may need to be increased to allow for use of building wraps, flashing, sill panning, brackets, fasteners or other items.**
- Dimensions in parentheses are in millimeters.
- Two locks are standard for windows with triple-pane glass or Andersen® art glass on sizes wider than 1'-7 1/8" (486) (all sizes shown).

◊Meet or exceed clear opening area of 5.7 sq.ft. or 0.53 m², clear opening width of 20" (508) and clear opening height of 24" (610).

♦Limited sash travel for windows with triple-pane glass or art glass. Sizes 3880 and 4080 are not available with art glass.

*Two locks are standard for windows with dual-pane glass on sizes wider than 3'-3 1/4" (997).

We'll only use 2 lites








7221

$0.00

SKU: 3068-M7221-PH6

4 Lite 1 Panel, beveled insulated glass, 1-3/4" thick

Species

Mahogany

Pre-Hang

6-9/16

Size-Width

3/0

Size-Height

6/8

Quantity

1

ADD TO CART

Available for shipping

Print Now

Include Pricing and Shipping Information

Fir Screen Door with Double Panel Bottom



Overview

Our Fir Screen Door with Double Panel Bottom brings the light and air in while keeping bugs out. Assembled in the USA of Douglas Fir and assembled using traditional tongue and groove construction, our screen doors are undrilled, unhanded, and unfinished – ready to be installed to suit the needs of your home.

- Available in 30", 32", and 36" widths
- Solid mix grain Douglas Fir
- Tongue and groove construction
- BetterVue screen provides 20% better airflow, more light transmission, and 10% better insect control than standard screen material
- Machine sanded with 100 grit paper, ready for hand sanding and finishing
- Requires protective top coats on all 6 surfaces after installation. Your local paint store can recommend the best products for your location and exposure
- Screen held in place with a ¼ inch spline
- Ships direct from vendor; production lead time is 4-7 weeks in summer, 2-4 weeks in winter ; non-returnable
- Assembled in USA

Dimensions

30" Wide

- Width: 30"
- Height: 81"
- Depth: 1-1/8"
- Double Panel Height: 30"
- Kickplate height: 5-3/8"

32" Wide

- Width: 32"
- Height: 81"
- Depth: 1-1/8"
- Double Panel Height: 30"
- Kickplate height: 5-3/8"

36" Wide

- Width: 36"
- Height: 81"
- Depth: 1-1/8"
- Double Panel Height: 30"
- Kickplate height: 5-3/8"

Pricing may vary at time of purchase.

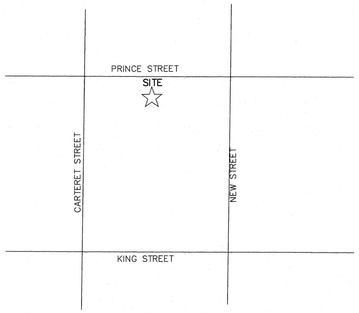

LOCATION MAP (N.T.S.)

NOTES:

1.) THE BEARINGS SHOWN HEREON ARE MAGNETIC AND AS SUCH ARE SUBJECT TO LOCAL ATTRACTION.
2.) THIS PLAT DOES NOT CERTIFY THE PRESENCE OR ABSENCE OF U.S. ARMY CORPS OF ENGINEERS JURISDICTIONAL WETLANDS.
3.) METHOD OF AREA CALCULATION BASED ON COORDINATE METHOD.
4.) LOCATION OF UNDERGROUND UTILITIES ARE FROM SURFACE INDICATIONS ONLY AND ARE NOT CERTIFIABLE.
5.) THIS PLAT REPRESENTS A SURVEY BASED ON THE LISTED REFERENCES ONLY AND IS NOT THE RESULT OF A TITLE SEARCH.
6.) CERTIFICATIONS ARE NOT TRANSFERABLE TO ADDITIONAL INSTITUTIONS OR SUBSEQUENT OWNERS.
7.) THE CERTIFIER HAS NOT INVESTIGATED OR BEEN INSTRUCTED TO INVESTIGATE THE EXISTENCE OR NONEXISTENCE OF ANY OVERLAY DISTRICTS, SUCH AS; AIRPORT, MILITARY, NOISE, CRASH POTENTIAL OR ENVIRONMENTAL ISSUES.
8.) BEFORE ANY DESIGN WORK OR CONSTRUCTION ON THIS SITE IS STARTED FLOOD ZONE INFORMATION MUST BE VERIFIED BY PROPER BUILDING CODES OFFICIAL.
9.) SETBACKS SHOWN AS PER PLAT OF RECORD AND MUST BE VERIFIED WITH OFFICIAL AGENCY BEFORE PURCHASE AND OR CONSTRUCTION ON SUBJECT PROPERTY.

10.) THIS PROPERTY APPEARS TO LIE IN ZONES AE (8.0) AND SHADED X AS DETERMINED BY FEMA, FIRM COMMUNITY-PANEL NUMBER 450026 4501C0166 G, DATED 3/23/21.
11.) CONTOUR INTERVAL IS 1'.
12.) VERTICAL DATUM IS 1988 NAVD.

REFERENCES:

1.) T.M.S. 120-4-1030
2.) PLAT BY GASQUE AND ASSOCIATES INC.
DATED 1/25/2016, REVISED 7/26/2016
PLAT BOOK 144, PAGE 192
RMC BEAUFORT COUNTY, SOUTH CAROLINA
3.) PLAT BY JACK JONES
DATED 4/7/92
DEED BOOK 596/1173
RMC BEAUFORT COUNTY, SOUTH CAROLINA

GASQUE & ASSOCIATES INC.
LAND SURVEYORS · PLANNERS
28 PROFESSIONAL VILLAGE CIRCLE, BEAUFORT, S.C.
P.O. BOX 1363, BEAUFORT, S.C.
(843) 522-1798

THIS PLAT IS COPYRIGHTED AND IS ONLY INTENDED FOR THE USE OF THE ENTITY OR PERSON(S) SHOWN HERE ON.

5.17.23
David E. Gasque, R.L.S.
S.C. Registration Number 10506

S.C. GEOID 18
CONUS 1983
S.C. STATE PLANE

LEGEND OF SYMBOLS & ABBREVIATIONS

	FIRE HYDRANT	MVM	MAIN VALVE MONUMENT
CO	CLEAN OUT	MH	MANHOLE
PP	POWER POLE	GW	GUY WIRE
TP	TELEPHONE PEDESTAL	CB	CABLE BOX
FO	FIBER OPTIC STUB	OE	OVERHEAD POWERLINE
WV	WATER VALVE		EDGE OF PAVEMENT
GV	GAS VALVE		BACK OF CURB
	WATER METER		LIGHTPOLE
	1/2"ROD SET		GAS LINE
			CENTER LINE
			CONTOUR LINE

TREE SIZE & TYPE
ELEVATION

SOUTH CAROLINA NOTARIZATION CERTIFICATE OF AUTHORIZATION
GASQUE & ASSOCIATES, INC.
No. C00192

TREE LEGEND

CODE	COMMON NAME	BOTANICAL NAME
PNS	PINE SHORTLEAF	Pinus echinata
PNL	PINE LONGLEAF	Pinus palustris
LO	LIVE OAK	Quercus virginiana
O	OAK	Quercus spp.
MAG	SOUTHERN MAGNOLIA	Magnolia grandiflora
PA	PALMETTO	Sabal palmetto
SUG	SUGARBERRY	Celtis laevigata
EL	ELM	Ulmus spp.
HI	MOCKERNUT HICKORY	Carya spp.
BAY	BAY MAGNOLIA	Gordonia spp.
WX	WAX MYRTLE	Myrica cerifera
CH	BLACK CHERRY	Prunus spp.
CE	EASTERN RED CEDAR	Juniperus virginiana
TA	CHINESE TALLOW-TREE	Sapium sebiferum
PO	YELLOW POPLAR	Liriodendron tulipifera
BI	BIRCH	Betula spp.
CY	BALDCYPRESS	Taxodium distichum
SY	AMERICAN SYCAMORE	Platanus occidentalis
PE	PECAN	Carya illinoensis
CR	CRAPEMYRTLE	Lagerstroemia indica
FR	FRUIT TREE	
MP	MAPLE	Morus spp.
DW	DOGWOOD	Cornus florida
GUM	SWEETGUM	Nyssa Sylvatica
WO	WATER OAK	Quercus nigra
LA	LAUREL OAK	Quercus laurifolia
TUL	TULIP TREE	Liriodendron
BJO	BLACKJACK OAK	Quercus marilandica
UNK	UNKNOWN	
CRA	CRAB APPLE	Malus sylvestris
MUL	MULBERRY	Morus
MIM	MIMOSA TREE	Albizia julibrissin
WHO	WHITE OAK	Quercus alba
TO	TURKEY OAK	Quercus cerris
RO	RED OAK	Quercus rubra
HOL	HOLLY	Aquifoliales
WIL	WILLOW TREE	Salix alba
TU	TUPELO	Nyssa yunnanensis
CHB	CHINABERRY	Melia azedarach
CW	COTTONWOOD	Populus
CL	CHERRY LAUREL	Prunus laurocerasus

ALL TREES ARE LOCATED TO THE FACE OF THE TREE TRUNK, THEREFORE TOLERANCE OF THE TREE LOCATED IS PLUS OR MINUS THE DIAMETER OF THE TREE PLUS 0.5 FEET. ALL TREES ARE MEASURED AT CHEST HEIGHT WHICH IS APPROXIMATELY 40 INCHES ABOVE GROUND. GROUND ELEVATION AT TREE LOCATIONS MAY OR MAY NOT ACCURATELY REPRESENT ELEVATIONS BETWEEN TREE SHOTS DUE TO THE GROUND BUTTRESS AT THE BASE OF THE TREE.
*NOTE*ANY TREE LOCATION THAT IS ORTICAL BEYOND THE TOLERANCE STATED ABOVE FOR DESIGN MUST BE POINTED OUT AND A TIGHTER TOLERANCE MUST BE AGREED UPON.

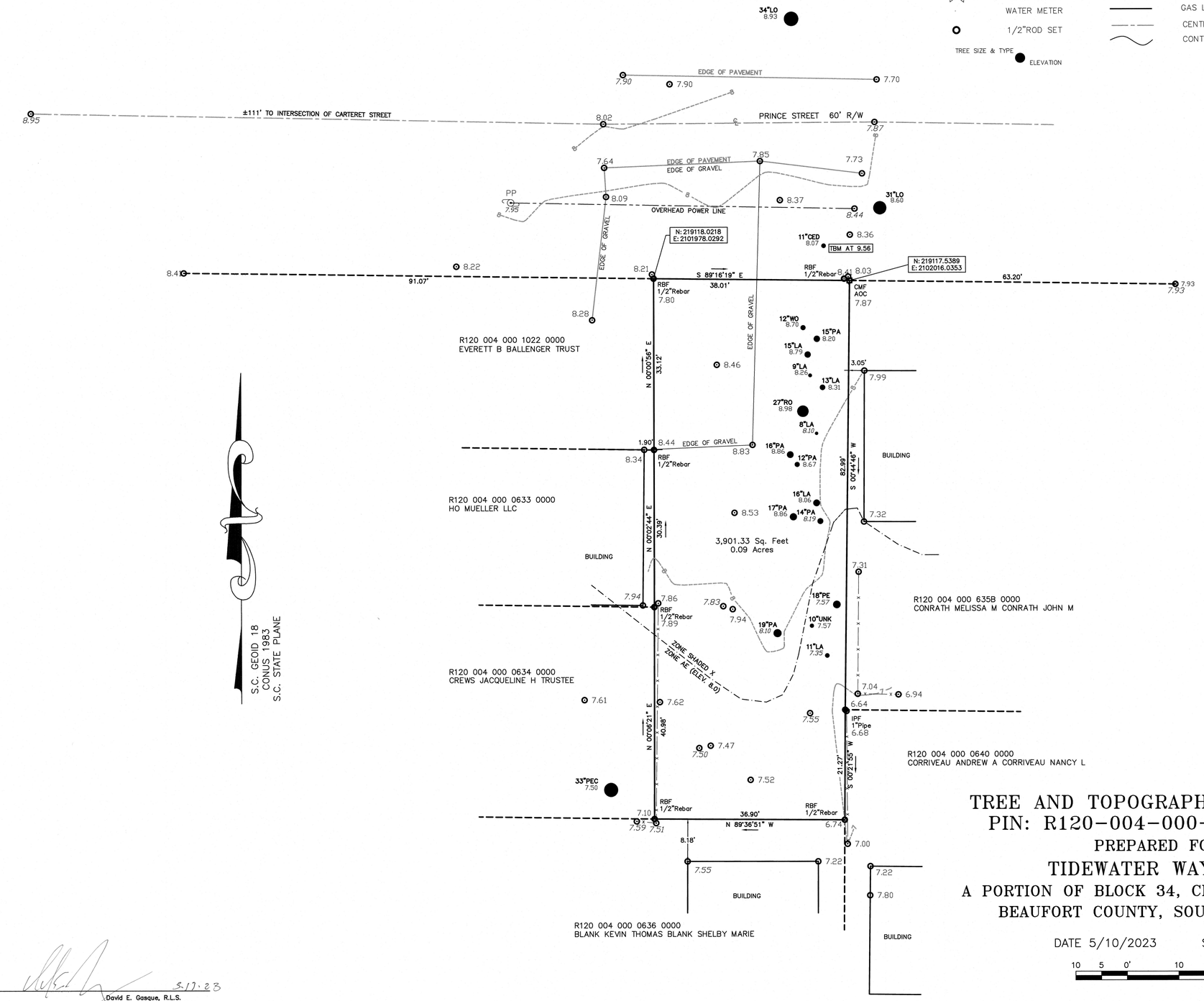

TREE AND TOPOGRAPHICAL SURVEY
PIN: R120-004-000-1030-0000
PREPARED FOR
TIDEWATER WAY, LLC
A PORTION OF BLOCK 34, CITY OF BEAUFORT
BEAUFORT COUNTY, SOUTH CAROLINA

DATE 5/10/2023 SCALE 1" = 10'

10 5 0' 10 20 40

JOB#58124 F.B.#1121/WG DRAWN BY DSG#9

TERMS OF PURCHASE AND USE:

1. Moser Design Group, Inc., assumes no liability for any home or any portion thereof which may be constructed from these plans. It is the responsibility of the purchaser of these plans to read and comply with the following prior to the start of actual construction.

2. These Plans are the property of Moser Design Group, Inc. These Plans are protected by Federal Copyright Laws. Any use of the information contained herein beyond the one-time use authorized by a plan purchase, or any duplication, publication, sale or distribution of any part of these plans without the prior written consent of Moser Design Group, Inc. represents a violation of Federal Laws subject to the prescribed penalties.

3. A purchase of bluekline prints grants the as "Licensee" the right to use such documents to construct a single home. Purchaser acknowledges that all rights of ownership, title, and interest in the copyrights, plans and derivatives remain with Moser Design Group, Inc. Modified plans are considered derivatives of the original. Derivatives receive the same copyright protection even if completely redrawn and like the Plans, may not be sold,. copied, or used to construct any other residence.

4. Any use of these plans, or modifications thereto, by the purchaser, his or her builder or others is performed at their own risk.

5. Plans should be reviewed by a local professional architect or engineer prior to the start of construction. The information contained within these construction documents is issued to show design intent and basic framing details. It is the builder's responsibility to provide standard construction detailing and practices which will provide a structurally sound and weatherproof finished product. The builder shall resolve any discrepancies or problems perceived prior to starting construction of such items.

6. Building codes vary because of the great differences in geography and climate throughout the United States and Canada. Each state, county and municipality has its own building codes, zone requirements, ordinances and building regulations. Plans may need to be modified to comply with local requirements regarding snow loads, energy codes, soil and seismic conditions and a wide range of other matters. It is the Purchaser's responsibility to consult with the proper construction professionals to ascertain if the plans comply with the codes governing the Licensee's building site and, if necessary, make any changes or verifications required.

7. The plans do not include any plumbing, heating or air conditioning plans due to the wide variety of codes and climatic conditions. A local electrical engineer, mechanical engineer and/or builder should provide such plans as may be required for permits and construction. The foundation plan and associated details are provided as a basic guide for a typical spread footing or typical concrete piers and conventional wood framed system. It is the purchaser's responsibility to have a local architect or licensed engineer review the plans and, if deemed necessary, provide a site-specific foundation design.

8. These plans provide ideas and concepts and are not intended to be complete in all respects and details. Use of a potential variety of window or door brands and types, and use of different materials and thicknesses may change details. Additionally, varying codes and regulations, foundation requirements and the omission of electrical and mechanical plans may also change details.

9. It is the builder's responsibility to assure that all work is in strict accordance with the latest edition of all applicable national, state, and local Building Codes. It is the builder's responsibility to assure that all work is in strict accordance with the latest edition of all applicable Construction Standards.

10. It is the builder's responsibility to assure that all manufactured articles, material, and equipment are applied, installed, connected, erected, used, cleaned, adjusted, operated and conditioned as directed by the manufacturers, unless specified herein to the contrary.

11. It is the builder's responsibility to assure that all materials, equipment and components are new and of good quality.

12. It is the builder's responsibility to check all plan dimension and details for overall accuracy appropriate to the site and final selection of masonry, floor joists, lumber, structural members, veneer, roofing, etc., all of which may create revised dimensions and details.

13. Names of materials and manufacturers shown on these plans do not represent any endorsement or recommendation by Moser Design Group, Inc. The final selection of the materials to be used is the responsibility of the home owner and/or builder, as is the proper installation of materials, nailing, gluing, caulking, insulation, flashing, roofing, weatherproofing and many other small items and details not necessarily indicated on the Plans. Moser Design Group, Inc. has no control over or responsibility for the selection, installation, or use of such items or details and shall not be liable for any errors, omissions, or deficiencies in any form pertaining thereto.

14. Moser Design Group, Inc. reserves the right to make changes to its models from time to time. therefore, does not warrant that the Plans will match any marketing images, web site or catalog that the purchaser may have reviewed and/or consulted in ordering plans.

15. DISCLAIMER OF WARRANTIES. To the maximum extent permitted by law, Moser Design Group, Inc. disclaims all warranties, express or implied, including the implied Warranty of Merchantability and implied Warranty of Fitness for a Particular Purpose.

16. LIMITATION OF LIABILITY. Moser Design Group, Inc. shall not be liable for any special, consequential, incidental, or indirect damages arising from use of the Plans, including but not limited to damages for loss of anticipated profits or loss of business opportunity. To the extend permitted by law, any liability of the Licensor shall be limited to the retail price of the Plans.

17. This agreement shall be construed in accordance with South Carolina law.

18. Amy legal action concerning or arising out of this agreement shall be brought only in a South Carolina State, or Federal Court located in Beaufort or Charleston Counties. in South Carolina, and the Licensor and Licensee consent to the exclusive jurisdiction of said Courts with respect to any such action.

GENERAL NOTES:

1. Do not scale drawings. Use only dimensions shown on drawings. If dimensions are in question, the builder shall obtain clarification from Moser Design Group, Inc. before continuing with construction. The builder shall verify all dimensions and conditions at jobsite.

2. Larger scale drawings supersede smaller scale drawings.

3. Coordinate location of utility meters on the site plan to keep them from public view and to minimize visual impact from any area of the site. Hold meters as low as possible to allow more effective screening.

4. Use materials appropriate to the application for maximum life and optimum appearance.



TIDEWATER WAY

TNH-B-08C-2 MODIFICATION

DRAWING INDEX

C	COVER SHEET / GENERAL INFORMATION
A-0	SITE SURVEY
A-1	SITE PLAN
A-2	FOUNDATION & FRAMING PLANS
A-3	FLOOR PLAN / ELECTRICAL PLAN
A-4	ELEVATIONS
A-5	SECTIONS & ROOF PLAN
A-6	SECTIONS & WALL DETAILS

NOTE:

CONTRACTOR TO VERIFY ALL CODE REQUIREMENTS, STRUCTURAL AND ENGINEERING DETAILS

CONTRACTOR TO VERIFY VENTILATION AND WATER-PROOFING DETAILS

CONTRACTOR TO VERIFY CONNECTIONS BETWEEN HOUSE AND FOUNDATION, VERIFY CONNECTIONS MEET ALL APPLICABLE CODES, AND LOADS IMPOSED.

SYMBOLS AND ABBREVIATIONS

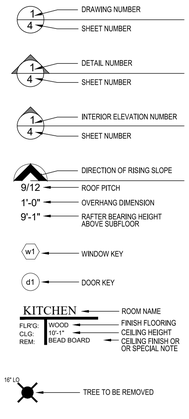

ABV	ABOVE
AFF	ABOVE FINISHED FLOOR
ASF	ABOVE SUBFLOOR
ADJ	ADJ
@	AT
BFE	BASE FLOOD ELEVATION
CONT	CONTINUOUS
CNTR	CENTER
CONST	CONSTRUCTION
CMU	CONCRETE MASONRY UNIT
CONC	CONCRETE
DIA	DIAMETER
DBL	COUBLE
DEG	DEGREES
EXT	EXTERIOR
FFE	FINISHED FLOOR ELEVATION
FIN	FINISH
FL	FLOOR
FT	FEET
FOS	FACE OF STUD
FOB	FACE OF BLOCK
GYP	GYPSUM
HB	HOSE BIBB
HVAC	HEATING, VENTILATION & AIR CONDITIONING
HT	HEIGHT
H/C	HANDICAP
HDR	HEADER
HORZ	HORIZONTAL
INT	INTERIOR
IN	INCHES
JST	JOIST
MIN	MINIMUM
MAX	MAXIMUM
NIC	NOT IN CONTRACT
OPN'G	OPENING
OC	ON CENTER
PSI	POUNDS PER SQUARE INCH
PSF	POUNDS PER SQUARE FOOT
PT	PRESSURE TREATED
PNT	PAINT
R	RISER
ROW	RIGHT OF WAY
REQ'D	REQUIRED
REM	REMOVE
SQFT	SQUARE FEET
TOB	TOP OF BLOCK
TOS	TOP OF STUD
TRD	TREAD
TRT'D	TREATED
VERT	VERTICAL
GALV	GALVANIZED
SS	STAINLESS STEEL

MDG
MOSER DESIGN GROUP
Residential Design
Urban Planning
1 MARKET #2
BEAUFORT • SOUTH CAROLINA
INFO@MOSERDESIGNGROUP.COM
(843) [illegible]030

COPYRIGHT © 2023 MOSER DESIGN GROUP, INC. ALL RIGHTS RESERVED. THE DESIGNS, DRAWINGS, AND WRITTEN MATERIAL AND SPECIFICATIONS OF THIS DOCUMENT ARE THE PROPERTY OF MOSER DESIGN GROUP, INC AND PART OF THESE DOCUMENTS SHALL BE COPIED, DISCLOSED TO OTHERS OR REPRODUCED IN PART OR WHOLE IN ANY FORM WITHOUT PRIOR WRITTEN CONSENT OF MOSER DESIGN GROUP, INC. DO NOT SCALE DRAWINGS, USE WRITTEN DIMENSIONS ONLY. IF A DIMENSION IS NOT GIVEN, VERIFY THE CORRECT DIMENSION WITH MOSER DESIGN GROUP INC CONTRACTOR SHALL CHECK AND VERIFY ALL DIMENSIONS AND CONDITIONS ON THE JOB SITE.

REVISIONS:

TIDEWATER WAY
TNH-B-08C-2 MODIFICATION
614 PRINCE STREET, BEAUFORT, SOUTH CAROLINA

SET NOT FOR CONSTRUCTION

REVIEW

DRAWING SET:
CONSTRUCTION DOCUMENTS
REVIEW SET

DATE:
10.03.23

SHEET:
C



LOCATION MAP (N.T.S.)

NOTES:

1.) THE BEARINGS SHOWN HEREON ARE MAGNETIC AND AS SUCH ARE SUBJECT TO LOCAL ATTRACTION.
2.) THIS PLAT DOES NOT CERTIFY THE PRESENCE OR ABSENCE OF U.S. ARMY CORPS OF ENGINEERS JURISDICTIONAL WETLANDS.
3.) METHOD OF AREA CALCULATION BASED ON COORDINATE METHOD.
4.) LOCATION OF UNDERGROUND UTILITIES ARE FROM SURFACE INDICATIONS ONLY AND ARE NOT CERTIFIABLE.
5.) THIS PLAT REPRESENTS A SURVEY BASED ON THE LISTED REFERENCES ONLY AND IS NOT THE RESULT OF A TITLE SEARCH.
6.) CERTIFICATIONS ARE NOT TRANSFERABLE TO ADDITIONAL INSTITUTIONS OR SUBSEQUENT OWNERS.
7.) THE CERTIFIER HAS NOT INVESTIGATED OR BEEN INSTRUCTED TO INVESTIGATE THE EXISTENCE OR NONEXISTENCE OF ANY OVERLAY DISTRICTS, SUCH AS; AIRPORT, MILITARY, NOISE, CRASH POTENTIAL OR ENVIRONMENTAL ISSUES.
8.) BEFORE ANY DESIGN WORK OR CONSTRUCTION ON THIS SITE IS STARTED FLOOD ZONE INFORMATION MUST BE VERIFIED BY PROPER BUILDING CODES OFFICIAL.
9.) THIS PROPERTY APPEARS TO LIE IN FLOOD ZONE A11 EL. 13.00' AS DETERMINED BY F.E.M.A. FIRM COMM-PANEL NUMBER 450026 0005 D. DATED 09/29/86

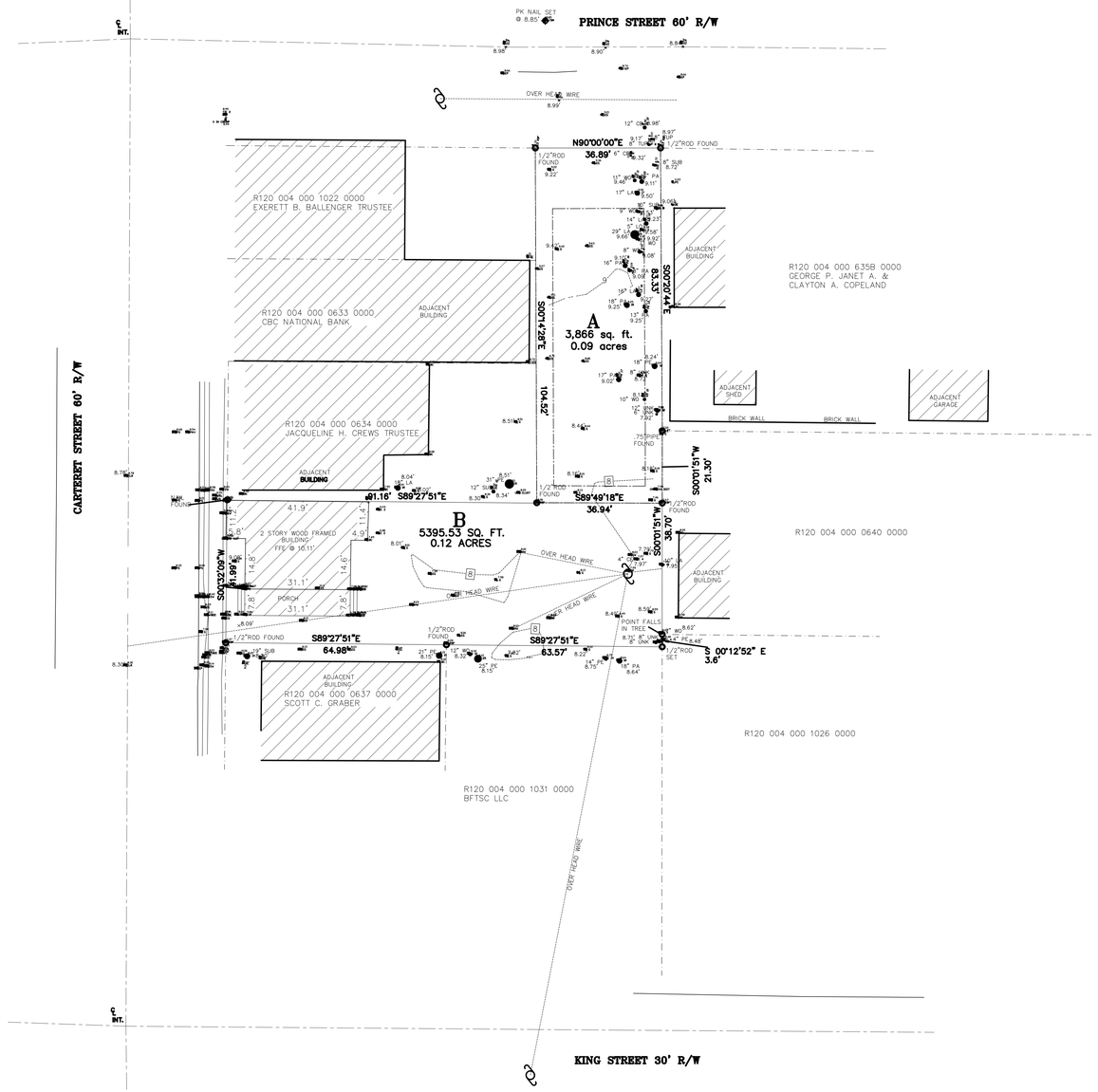

TREE LEGEND

CODE	COMMON NAME	BOTANICAL NAME
PN	PINE	Pinus spp.
LO	LIVE OAK	Quercus virginiana
O	OAK	Quercus spp.
MAG	SOUTHERN MAGNOLIA	Magnolia grandiflora
PA	PALMETTO	Sabal palmetto
SUB	SUGARBERRY	Celtis laevigata
EL	ELM	Ulmus spp.
HI	HICKORY	Carya spp.
BAY	BAY MAGNOLIA	Gordonia spp.
WX	WAX MYRTLE	Myrica cerifera
CH	CHERRY	Prunus spp.
CE	EASTERN RED CEDAR	Juniperus virginiana
TA	CHINESE TALLOW-TREE	Saplum sebiferum
PO	YELLOW POPLAR	Liriodendron tulipifera
BI	BIRCH	Betula spp.
CY	BALDCYPRESS	Taxodium distichum
SY	AMERICAN SYCAMORE	Platanus occidentalis
PE	PECAN	Carya illinoensis
CR	CRAPEMYRTLE	Lagerstroemia indica
FR	FRUIT TREE	
MP	MAPLE	Morus spp.
DW	DOGWOOD	Cornus florida
GUM	GUM	
WO	WATER OAK	Quercus nigra
LA	LAUREL OAK	Quercus laurifolia
UNK	UNKNOWN	

ALL TREES ARE LOCATED TO THE FACE OF THE TREE TRUNK, THEREFORE TOLERANCE OF THE TREE LOCATED IS PLUS OR MINUS THE DIAMETER OF THE TREE PLUS 0.5 FEET. ALL TREES ARE MEASURED AT CHEST HEIGHT WHICH IS APPROXIMATELY 4O INCHES ABOVE GROUND. GROUND ELEVATION AT TREE LOCATIONS MAY OR MAY NOT ACCURATELY REPRESENT ELEVATIONS BETWEEN TREE SHOTS DUE TO THE GROUND BUTTRESS AT THE BASE OF THE TREE.
*NOTE*ANY TREE LOCATION THAT IS CRITICAL BEYOND THE TOLERANCE STATED ABOVE FOR DESIGN MUST BE POINTED OUT AND A TIGHTER TOLERANCE MUST BE AGREED UPON.

REFERENCES:

1.) T.M.S. R120 004 000 0636 0000
2.) T.M.S. R120 004 000 1030 0000
3.) PLAT BY R.D. TROGDON JR.
DATED MAY 2, 1986
DEED BOOK 449, PAGE 1266
BEAUFORT COUNTY R.M.C. OFFICE
4.) PLAT BY F. STEVEN JOHNSON
DATED OCTOBER 25, 1990
DEED BOOK 575, PAGE 2364
BEAUFORT COUNTY R.M.C. OFFICE
5.) JUDGMENT ROLL # 87391

I, David E. Gasque, a Registered Professional Land Surveyor in the State of South Carolina, certify to client(s) shown hereon that to the best of my knowledge , information and belief, the survey shown hereon was made in accordance with the requirements of the minimum standards manual for the practice of land surveying in South Carolina, and meets or exceeds the requirements for a CLASS survey as specified therein, also there are no encroachments or projections other than shown. This survey is not valid unless it bears the orginal signature and has an embossed seal.

David E. Gasque, R.L.S.
S.C. Registration Number 10506

GASQUE & ASSOCIATES INC.
LAND SURVEYORS PLANNERS
28 PROFESSIONAL VILLAGE CIRCLE, BEAUFORT, S.C.
P.O. BOX 1363, BEAUFORT, S.C.
(843) 522-1798

THIS PLAT IS COPYRIGHTED AND IS ONLY INTENDED FOR THE USE OF THE ENTITY OR PERSON(S) SHOWN HERE ON.

GRAPHIC SCALE
20 0 10 20 40 80
(IN FEET)
1 inch = 20 ft.

SOUTH CAROLINA
GASQUE & ASSOCIATES, INC.
No. C00192
CERTIFICATE OF AUTHORIZATION

ASBUILT, TREE & TOPOGRAPHY SURVEY
BLOCK 34, LOTS A & B
PREPARED FOR
RICHARD A. KENNEY
CITY OF BEAUFORT
BEAUFORT COUNTY SOUTH CAROLINA

DATE 3/1/2017 SCALE 1"=20'

A-0

JOB# 46334 F.B.# 941/AC DRAWN BY6

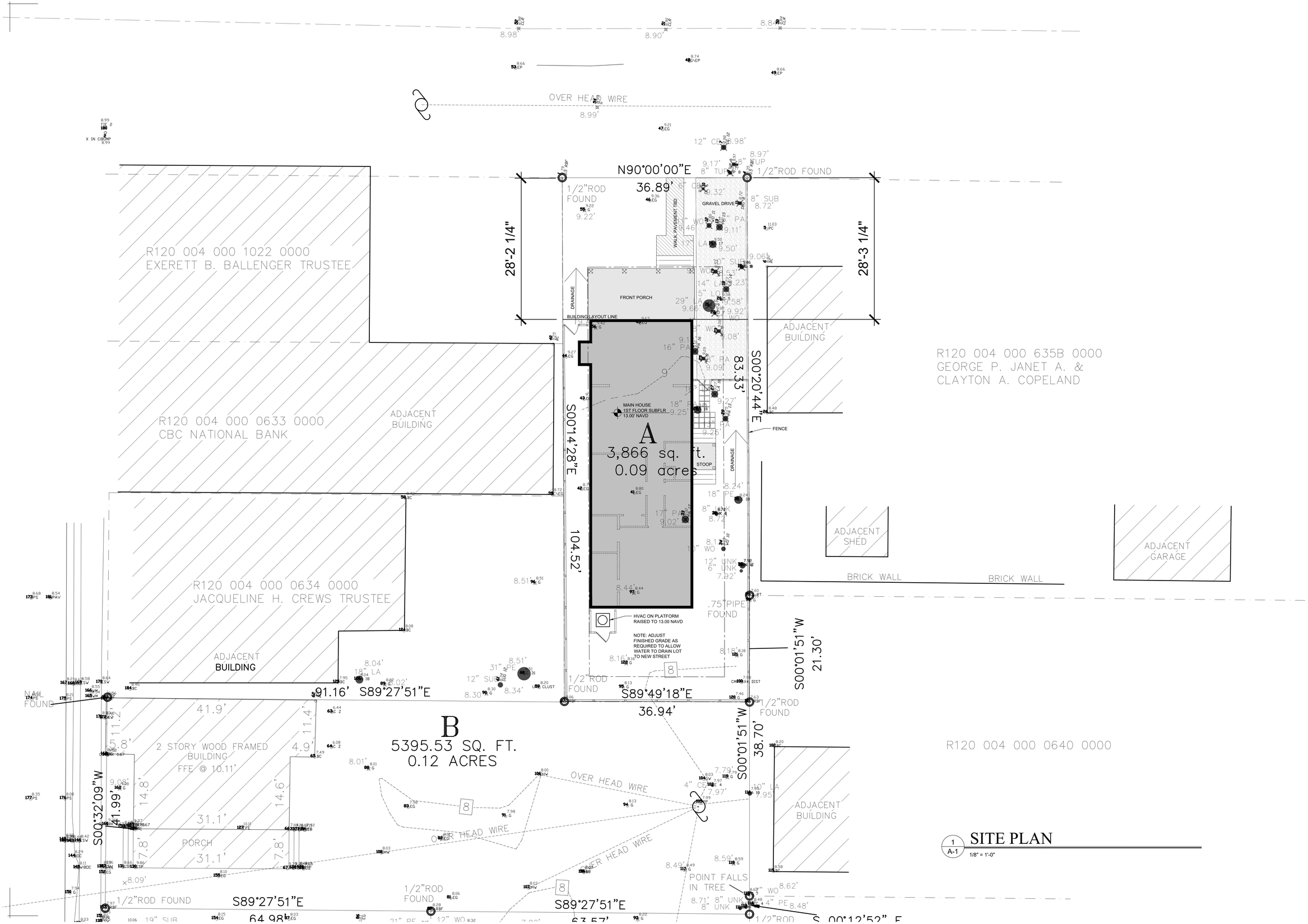

1 A-1 SITE PLAN
1/8" = 1'-0"

MDG
MOSER DESIGN GROUP
Residential Design
Urban Planning

1 MARKET #2
BEAUFORT • SOUTH CAROLINA
INFO@MOSERDESIGNGROUP.COM
(843) 524-0030

COPYRIGHT © 2023 MOSER DESIGN GROUP, INC. ALL RIGHTS RESERVED. THE DESIGN, DRAWINGS, AND WRITTEN MATERIAL AND SPECIFICATIONS OF THIS DOCUMENT ARE THE PROPERTY OF MOSER DESIGN GROUP, INC. NO PART OF THESE DOCUMENTS SHALL BE COPIED, DISCLOSED TO OTHERS, OR REPRODUCED IN PART OR WHOLE IN ANY FORM WITHOUT THE WRITTEN CONSENT OF MOSER DESIGN GROUP, INC. DO NOT SCALE DRAWINGS, USE WRITTEN DIMENSIONS ONLY. IF A DIMENSION IS NOT GIVEN, VERIFY THE CORRECT DIMENSION WITH MOSER DESIGN GROUP, INC. CONTRACTOR SHALL CHECK AND VERIFY ALL DIMENSIONS AND CONDITIONS ON THE JOB SITE.

REVISIONS:

TIDEWATER WAY
TNH-B-08C-2 MOD
614 PRINCE STREET, BEAUFORT, SOUTH CAROLINA

REVIEW SET NOT FOR CONSTRUCTION

DRAWING SET:
CONSTRUCTION DOCUMENTS REVIEW SET

DATE:
10.03.23

SHEET:
A-1

WINDOW SCHEDULE

WDW #	UNIT ID	No UNITS	JOIN MULL	FRAME WD	FRAME HT	HEADER HT.	TYPE	MANUF	SHUTTERS	REMARKS
w1	2836	-	-	2'-9 3/8"	6'-8 3/4"	8'-6"	DBL HUNG		LOUVERED	
w2	2836	-	-	2'-9 3/8"	6'-8 3/4"	8'-6"	DBL HUNG		LOUVERED	
w3	2836			2'-9 3/8"	6'-8 3/4"	8'-6"	DBL HUNG		LOUVERED	
w4	2836			2'-9 3/8"	6'-8 3/4"	8'-6"	DBL HUNG		LOUVERED	
w5	2024			2'-1 3/8"	4'-8 3/4"	8'-6"	DBL HUNG		LOUVERED	
w6	2836	-	-	2'-9 3/8"	6'-8 3/4"	8'-6"	DBL HUNG		LOUVERED	
w7	2836	-	-	2'-9 3/8"	6'-8 3/4"	8'-6"	DBL HUNG		LOUVERED	
w8	2836	-	-	2'-9 3/8"	6'-8 3/4"	8'-6"	DBL HUNG		LOUVERED	
w9	2024	-	-	2'-1 3/8"	4'-8 3/4"	**8'-6"**	DBL HUNG		LOUVERED	
w10	2836	-	-	2'-9 3/8"	6'-8 3/4"	8'-6"	DBL HUNG		LOUVERED	
w11	2836	-	-	2'-9 3/8"	6'-8 3/4"	8'-6"	DBL HUNG		LOUVERED	
w12	2024			2'-1 3/8"	4'-8 3/4"	**8'-6"**	DBL HUNG		LOUVERED	
w13	1614	-	-	1'-9 3/8"	3'-0 3/4"	4'-3"	DBL HUNG		LOUVERED	CENTERED IN GABLE
w14	1614	-	-	1'-9 3/8"	3'-0 3/4"	4'-3"	DBL HUNG		LOUVERED	CENTERED IN GABLE

Note, All windows to have: 2" deep historical sill
2 over 2 Simulated Divided Light pattern w/ 7/8 muntins & 3/4" shadow bar.

DOOR SCHEDULE

ID	Door Width	Door Height	Door Material	Panels	Door Glass	# of Leafs	Operation	Transom Height	Transom Glass	Header Ht.	Hardware	Remarks
d1	3'-0"	6'-8"	Mahogany	1 Raised	3/4-6 lite	1	Swing	18"	3 Lite	8'-6"	Entry	3" mull below transom
d2	2'-8"	6'-8"	Mahogany	1 Raised	3/4-6 lite	1	Swing	18"	3 Lite	8'-6"	Entry	3" mull below transom
d3	2'-8"	6'-8"	Solid core	4 Flat	-	1	Swing	18"	1 Lite	8'-6"	Passage	3" mull below transom
d4	NOT USED											
d5	2'-6"	6'-8"	Solid core	4 Flat		1	Swing	18"	False	6'-10"	Closet	3" mull below transom
d6	2'-6"	6'-8"	Solid core	4 Flat	-	1	Swing	18"	1 Lite	8'-6"	Passage	3" mull below transom
d7	2'-6"	6'-8"	Solid core	4 Flat	-	1	Swing	18"	1 Lite	8'-6"	Passage	3" mull below transom
d8	3'-0"	6'-8"	Solid core	4 Flat	-	2	Swing	18"	False	6'-10"	Closet	3" mull below transom
d9	2'-8"	6'-8"	Solid core	4 Flat	-	1	Swing	18"	1 Lite	8'-6"	Passage	3" mull below transom
d10	2'-6"	6'-8"	Solid core	4 Flat	-	1	Pocket	18"	False	6'-10"	Closet	3" mull below transom
d11	2'-6"	6'-8"	Solid core	4 Flat	-	1	Pocket	18"	1 Lite	8'-6"	Passage	2x6 Framing

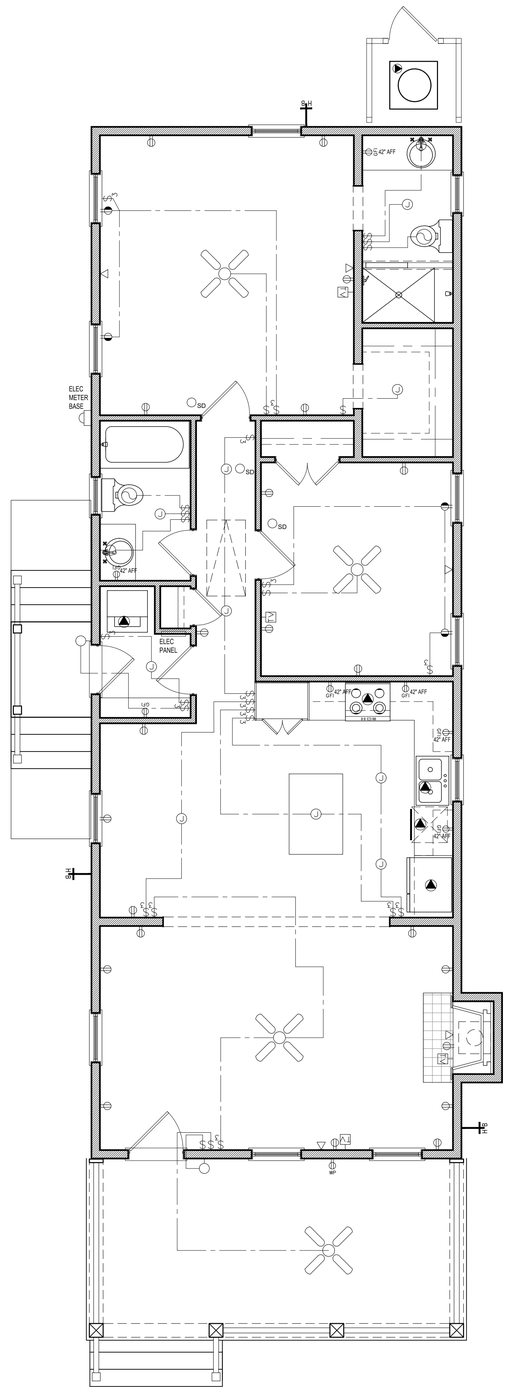

ELECTRICAL LEGEND

	5-1/2" RECESSED CAN LIGHT
	3-1/2" RECESSED CAN LIGHT
	SURFACE MOUNTED LIGHT
	WALL MOUNT LANTERN
	DOOR HEADER MOUNT FLOURESCENT
	VANITY STRIP LIGHT
	2'X4' FLOURESCENT LIGHT UNIT
J	JUNCTION BOX
	EXTERIOR SPOT LIGHT
	VENT/ LIGHT COMBINATION
	SINGLE POLE SWITH
3	3-WAY SWITCH
4	4-WAY SWITCH
S	GLOW SWITCH
B	DOOR BELL
C	DOOR BELL CHIMES
	110v DUPLEX RECPTACLE
	1/2 SWITCHED RECEPTACLE
	FLOOR RECEPTACLE
GFI	GFI DUPLEX RECPTACLE
WP	WATER PROOF RECEPTACLE
220	220v HOOK-UP
	APPLIANCE HOOK-UP
TV	CABLE TV HOOK-UP
T	TELEPHONE JACK
T	THERMOSTAT
SD	SMOKE DETECTOR
WH	80 GAL HOT WATER HEATER
	THERMO-CONTROLLED ATTIC VENT FAN
	HVAC AIRHANDLER
	ELECRICAL MAIN PANEL
	ELECTRIC METER BASE

ADDITIONAL ELECTRICAL HOOK UP:

- WH — WATER HEATER HOOKUP IN ATTIC
- ATTIC VENT FAN HOOKUP IN ATTIC
- AIR HANDLER HOOKUP IN ATTIC
- J — JUNCTION BOX
  ELECTRICIAN TO PROVIDE LIGHT FIXTURE OR CEILING FAN FOR EACH JUNCTION BOX SHOWN ON PLAN PER OWNERS SELECTION..

ELECTRICAL NOTES

1. Drawings are diagrammatic only. They do not illustrate conduit, wiring, panels, breakers, disconnects, accessories, etc. It is the builders responsibility to correctly locate and install all items necessary to to complete the electrical package, regardless of whether they shown on the this drawing. Builder to verify electrical design and installation is in accordance with all applicable codes, standards and requirements.

2. Install outlets to the following specifications, or to meet local building codes. Install GFCI outlets in all wet locations, kitchen and bathroom. In the kitchen, outlets must be every 4' at counter as required by applicable codes. These areas include receptacles in a bathroom, kitchenette, or other area where running water is present or areas exposed to the weather. Use AFCI outlets and switches in the bedroom. Use W/P outlet as exterior.

3. Install hardwired smoke detectors with battery backup. Interconnect detectors so that all will sound should one detector activate. Verify number of smoke detectors required and locations with owner and code requirements. Detectors shall be installed in all sleeping areas and just outside bedrooms as a minimum.

4. Some equipment may require electrical service, such as water heaters, air conditioning units, condensate pumps, etc. Electrical contractor shall include electrical service to all such equipment. Coordinate with other trades concerning items requiring electrical service. Coordinate service and ampacity required. Provide one duplex outlet and one light if unit os in non-lit area for every condensing unit and every air-handling unit as required by applicable codes. Outlet shall be weatherproof GFCI if unit is exposed to weather.

5. Provide panel boards of proper voltage and ampacity for all electrical circuits.

6. Verify service requirements with local power company including transformer locations and types, disconnects, at exterior of building, voltages, ampacities and other details of electrical construction. Size all feeders according to NEC requirements.

7. Run all cable concealed in walls, ceiling or floors unless noted otherwise.

8. Provide blocking for all fixtures.

9. Isulate and seal solidly behind receptacles in exterior walls.

10. Light fixtures shall be centered in ceiling areas unless noted otherwise. The designer recommends that all light fixtures be surface mounted, not recessed can lights.

11. Locate switches adjacent to but not intersecting door casings or trim. Switches shall typically be mounted 36" AFF to center of switch.

12. Consult owner and add exterior security lighting if required. Verify lighting type and switching.

AUXILIARY SYSTEMS NOTES

1. No alarm systems, telephone outlets or computer outlets are shown. Verify alarm requirements with owner and install as required.

PLUMBING NOTES

1. System shall be designed in accordance with all applicable codes, standards and requirements of local utility officials.

2. Insulate all domestic water supply lines in un-insulated spaces with tubular foam insulation. Insulation shall be of self-sealing type or shall be taped closed with foil faced tape.

3. Center all fixtures in space allocated unless noted otherwise. Coordinate placement of all drains with flooring subcontractor.

4. Cleanouts shall extend to surfaces or shall be provided with access doors or simialr devices. Cap all pipe to be left open overnight and protect pipe during installation from dirt, gravel, and other debris which might cause blockages or flow restrictions. All valves, cleanouts and control devices shall be accessible for operation and maintenance through access doors or panels manufactured for such purposes.

5. Lead solder is not allowed on this project.

6. Soil and vent stacks shall have cleanouts as required by applicable codes for proper maintenance.

7. Coordinate with an electrician concerning items requiring electrical service such as water coolers, sensor flush valves and water heaters. Coordinate service and ampacity required.

8. Seal to wall, floor or countertop around all fixtures with tub and tile sealant to match color of fixture unless otherwise noted.

MECHANICAL NOTES

Design and specification or mechanical system to be determined by builder or local engineer. Builder to furnish all ductwork, control wiring, piping, fittings, accessories, etc. for complete installation. Closely coordinate work with all other trades. Maintain ceiling heights and duct spaces provided.

1 A-3 **ELECTRICAL PLAN**
1/4" = 1'-0"

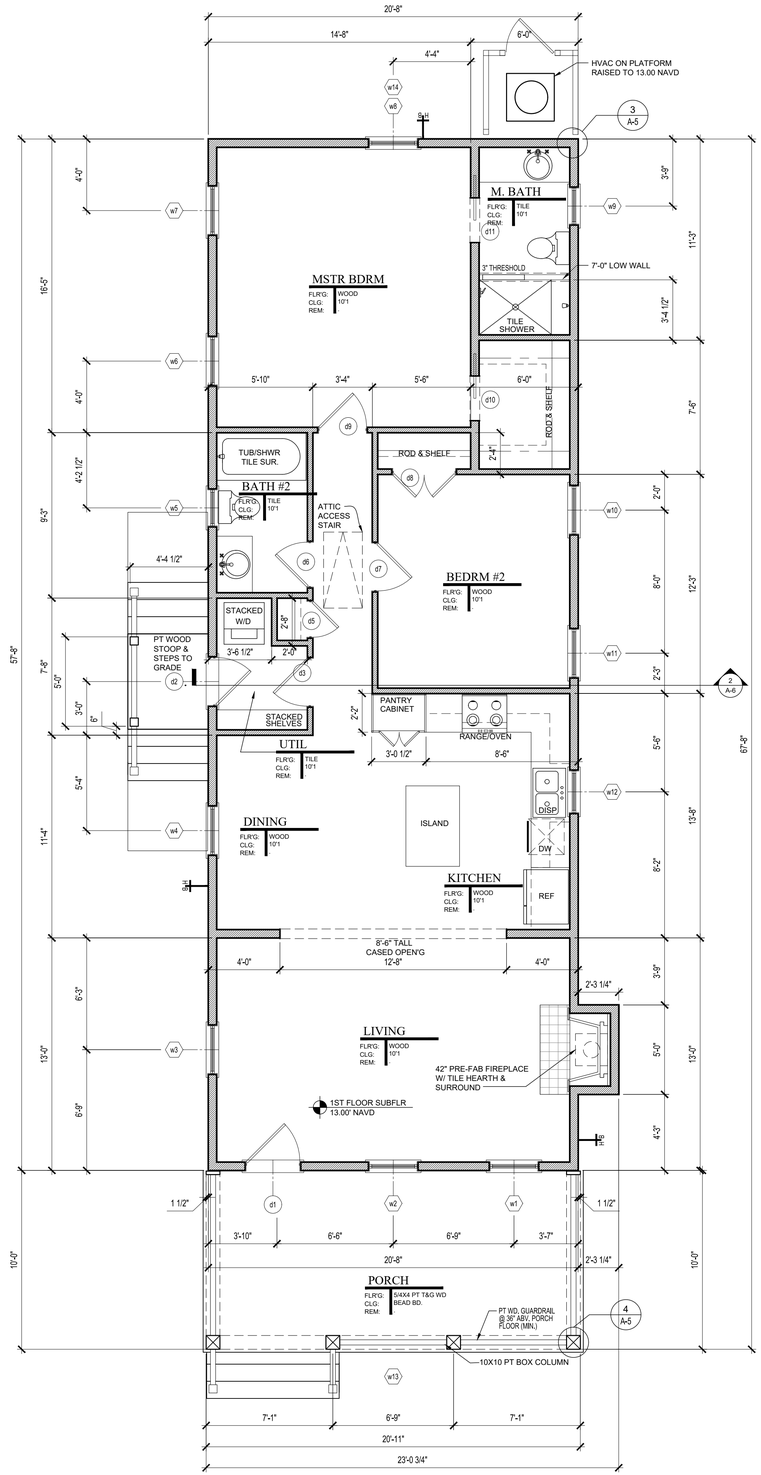

2 A-3 **FLOOR PLAN**
1/4" = 1'-0"
0 1 2 4 8

BUILDING AREAS

TOTAL HEATED	1192 SQ FT
FRONT PORCH	206 SQ FT

MDG
MOSER DESIGN GROUP
Residential Design
Urban Planning
1 MARKET #2
BEAUFORT • SOUTH CAROLINA
INFO@MOSERDESIGNGROUP.COM
(843) [illegible]-0030

COPYRIGHT © 2023 MOSER DESIGN GROUP, INC. ALL RIGHTS RESERVED. THE DESIGNS, DRAWINGS, AND WRITTEN MATERIAL AND SPECIFICATIONS OF THIS DOCUMENT ARE THE PROPERTY OF MOSER DESIGN GROUP, INC AND PART OF THESE DOCUMENTS SHALL BE COPIED, DISCLOSED TO OTHERS OR REPRODUCED IN PART OR WHOLE IN ANY FORM WITHOUT WRITTEN CONSENT OF MOSER DESIGN GROUP, INC. DO NOT SCALE DRAWINGS, USE WRITTEN DIMENSIONS ONLY. IF A DIMENSION IS NOT GIVEN, VERIFY THE CORRECT DIMENSION WITH MOSER DESIGN GROUP INC. CONTRACTOR SHALL CHECK AND VERIFY ALL DIMENSIONS AND CONDITIONS ON THE JOB SITE.

REVISIONS:

SET FOR CONSTRUCTION REVIEW

TIDEWATER WAY
TNN-B-08 2 MOD
614 PRINCE STREET, BEAUFORT, SOUTH CAROLINA

DRAWING SET:
CONSTRUCTION DOCUMENTS
REVIEW SET

DATE:
10.03.23

SHEET:
A-3

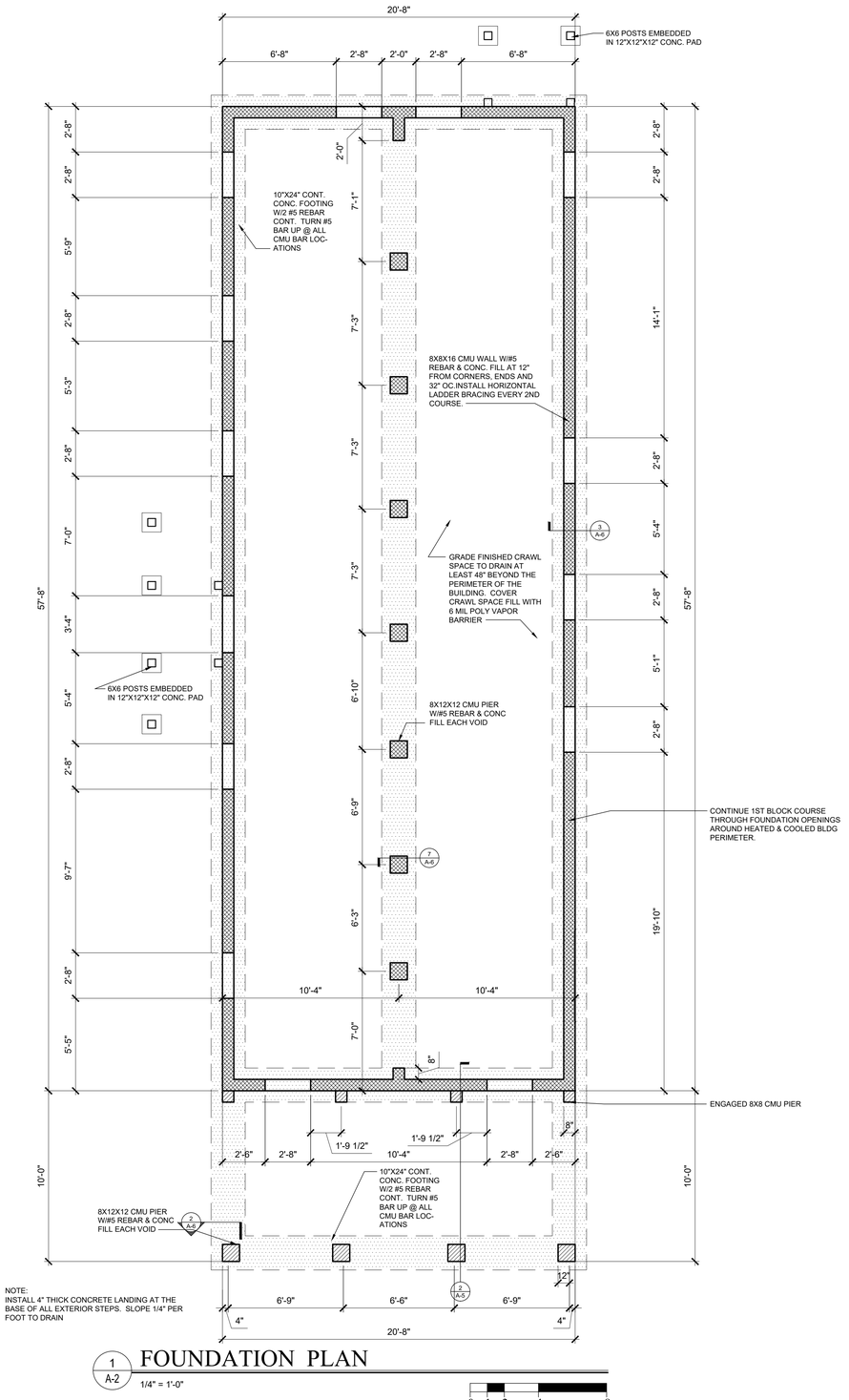

1 A-2 FOUNDATION PLAN

1/4" = 1'-0"

0 1 2 4 8

LEGEND

INDICATES CMU PIER OR FOUNDATION WALL. SIZE AS NOTED ON PLAN ABOVE.

INDICATES DROPPED CMU PORCH PIER. TOP OF BLOCK 4" BELOW PRIMARY CMU

INDICATES REINFORCED CONC FOOTING

GENERAL NOTES
1. All installations shall comply with local building codes if more stringent than the following provisions. All structural information shown is for reference purposes only. Builder or local licensed structural engineer shall review actual site conditions & verify and/or specify all structural elements.
2. Builder or local licensed structural engineer to verify and/or specify all strapping connections meet or exceed all applicable building codes.

CONCRETE
1. All concrete work shall be in accordance with A.C.I. 301, unless otherwise noted.
2. All poured in place concrete shall be rated 3000 psi at 28 days, maximum size of aggregate shall be 3/4" with a permissible slump of 4" + 1".
3. Admixtures shall not be permitted without written approval of the Engineer.
4. Formwork shall be clean and free of defects.
5. Minimum concrete cover shall be as follows; Poured on ground = 3". Formed in contact with ground = 2

MASONRY WALLS
1. Concrete masonry units for load bearing walls shall conform to ASTM C-90. All other masonry units shall conform to ASTM C-129.
2. Mortar shall conform to ASTM C-270, type "M" (2500 psi).

REINFORCING STEEL
1. Reinforcing steel shall conform to the ASTM A-615, Grade 60, fabricated in accordance with the C.R.S.I. Manual and placed in accordance with the A.C.I. Manual.
2. Welded wire fabric shall conform to ASTM A-185.

FOUNDATION NOTES
1. All structural information shown is for reference purposes only. Builder or local licensed structural engineer shall review actual site conditions as well as verify and/or specify all structural elements to be in compliance with local building codes.
2. Builder shall inspect site & excavated conditions prior to beginning foundation construction. Builder shall notify owner and/or local licensed structural engineer of any non-typical conditions concerning soils, ground water or any other issue, which may require additional or special engineering design.

STRUCTURAL WOOD
1. Wood exposed to the weather or in contact with concrete or masonry shall be pressure treated. Use stainless steel or manufacturer approved anchors and fasteners for corrosion resistance. No galvanized fasteners are to be used in contact with pressure-treated members.
2. Roof framing to be engineered roof trusses, all connections, sizes and spacing to be detailed by manufacturer. Connection of the truss to building is the responsibility of builder/owner and shall be designed by others.
3. Bridging is to be provided as required by code, but not less than one center bridging for spans over 10 ft and 8 ft o.c. for spans over 16 ft.
4. Metal connectors shall conform to the latest requirement of the applicable codes. Provide and install hurricane clips throughout as per code requirements.
5. Metal exposed to the weather, including nails, flashing and drip edges, shall be galvanized, unless otherwise noted.

FRAMING NOTES
1. Wood framing & blocking shall be s.y. pine, spruce, or fir, stud grade or better for 2x4's, #2 SPF or better for all other sizes. All framing & blocking lumber shall be kiln-dried to a moisture content of 19% or better. Wood blocking shall be solid & shall match the depth of the primary framing members.
2. All joists installed crown up unless noted otherwise.
3. Provide solid blocking between joists at mid-span for joists exceeding 8'-0" between supports.
4. Provide solid blocking between joists above frame walls and beams.
5. Flush framed joists shall be secured to beams/girders with properly sized metal joist hangers.
6. Where frame walls are parallel to and rest on joists – provide 2 additional joists beneath wall.
7. Where frame walls are perpendicular to or at an angle to and rest on joists, provide solid blocking between joists at 24" oc.
8. In frame walls – provide solid blocking for all plywood sheathing edges which run perpendicular to wall studs.
9. Bird-mouth rafters to fit beams and walls as indicated on the details, tie each rafter to frame wall or beam with specifed "Simpson" hurricane anchor
10. Wall Types
    a. Typical interior partition walls shall be 2x4 studs (3 1/2" thick) @16" o.c. unless noted
    b. Typical exterior walls shall be 2x6 studs (5 1/2" thick) @ 16" o.c.
    c. Plumbing wall to be 2x6 studs (5 1/2" thick) @ 16" o.c.
    d. Notch maximum 25% of Stud depth
    e. Bored hole maximum 40% Stud depth
11. All exterior stud walls to have 5/8" APA Exterior ply sheathing.
12. Typical header to be (3) 2x8's over doors & windows
13. Dimensions shown are to the face of stud on interior walls or face of stud on exterior walls unless noted otherwise.
14. Coordinate truss design with rough frame opening for pull down attic stair.

NOTE:

CONTRACTOR TO VERIFY ALL CODE REQUIREMENTS, STRUCTURAL AND ENGINEERING DETAILS

CONTRACTOR TO VERIFY VENTILATION & WATER PROOFING DETAILS

CONTRACTOR TO VERIFY AND/OR SPECIFY CONNECTIONS BETWEEN HOUSE AND FOUNDATION MEET ALL APPLICABLE BUILDING CODES

DO NOT CONSTRUCT FOUNDATION AS SHOWN. Soil conditions and Flood Elevations vary significantly and foundation work must be suitable to the site specific requirements. The actual foundation requirements should be designed by others, and, if required by the Building Official, a scientific soil investigation may be required in order to determine the most suitable foundation system.

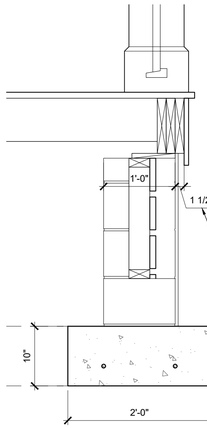

3 A-2 PORCH FRAMING DETAIL

1/4" = 1'-0"

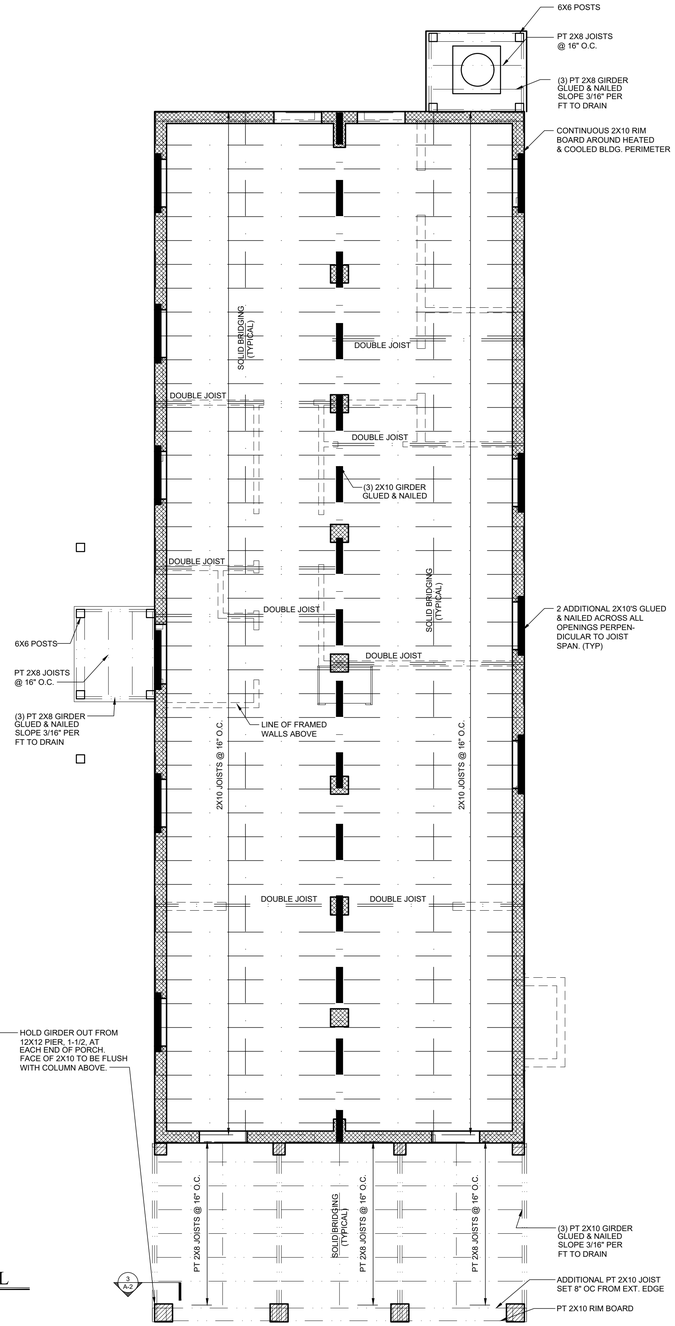

2 A-2 1ST FLR FRAMING PLAN

1/4" = 1'-0"

0 1 2 4 8

MDG
MOSER DESIGN GROUP
Residential Design Urban Planning
1 MARKET #2
BEAUFORT • SOUTH CAROLINA
INFO@MOSERDESIGNGROUP.COM
(843) 524-3930

COPYRIGHT © 2023 MOSER DESIGN GROUP, INC., ALL RIGHTS RESERVED. THE DESIGNS, DRAWINGS, AND WRITTEN MATERIAL AND SPECIFICATIONS OF THIS DOCUMENT ARE THE PROPERTY OF MOSER DESIGN GROUP, INC. AND PART OF THESE DOCUMENTS SHALL BE COPIED, DISCLOSED TO OTHERS OR REPRODUCED IN PART OR WHOLE IN ANY FORM WITHOUT WRITTEN CONSENT OF MOSER DESIGN GROUP, INC. DO NOT SCALE DRAWINGS, USE WRITTEN DIMENSIONS ONLY. IF A DIMENSION IS NOT GIVEN, VERIFY THE CORRECT DIMENSION WITH MOSER DESIGN GROUP, INC. CONTRACTOR SHALL CHECK AND VERIFY ALL DIMENSIONS AND CONDITIONS ON THE JOB SITE.

REVISIONS:

SET FOR CONSTRUCTION REVIEW

TIDEWATER WAY
TMS R120 08E-2 MODEL
614 PRINCE STREET, BEAUFORT, SOUTH CAROLINA

DRAWING SET:
CONSTRUCTION DOCUMENTS
REVIEW SET

DATE:
10.03.23

SHEET:
A-2



1 A-4 ALLEY ELEVATION
1/4" = 1'-0"



2 A-4 RIGHT SIDE ELEVATION
1/4" = 1'-0"



3 A-4 LEFT SIDE ELEVATION
1/4" = 1'-0"

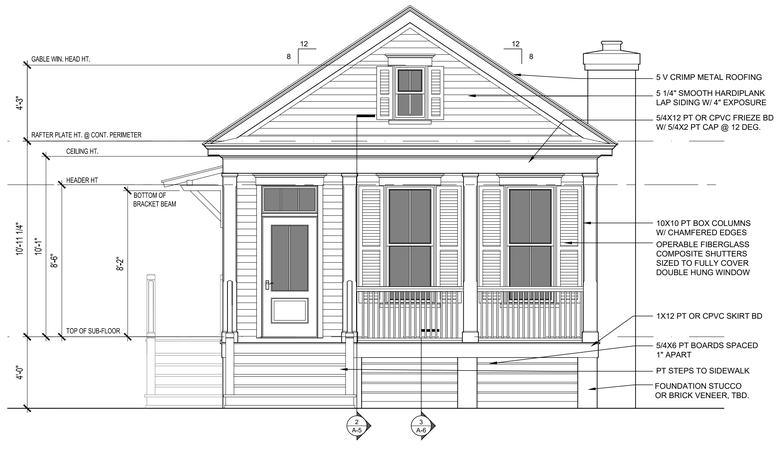

4 A-4 SIDEWALK ELEVATION
1/4" = 1'-0"

0 1 2 4 8

MDG
MOSER DESIGN GROUP
Residential Design
Urban Planning

1 MARKET #2
BEAUFORT • SOUTH CAROLINA
INFO@MOSERDESIGNGROUP.COM
(843) [illegible]030

COPYRIGHT © 2023 MOSER DESIGN GROUP, INC. ALL RIGHTS RESERVED. THE DESIGN, DRAWINGS, AND WRITTEN MATERIAL AND SPECIFICATIONS OF THIS DOCUMENT ARE THE PROPERTY OF MOSER DESIGN GROUP, INC. NO PART OF THESE DOCUMENTS SHALL BE COPIED, DISCLOSED TO OTHERS, OR REPRODUCED IN PART OR WHOLE IN ANY FORM WITHOUT THE WRITTEN CONSENT OF MOSER DESIGN GROUP, INC. DO NOT SCALE DRAWINGS, USE WRITTEN DIMENSIONS ONLY. IF A DIMENSION IS NOT GIVEN, VERIFY THE CORRECT DIMENSION WITH MOSER DESIGN GROUP, INC. CONTRACTOR SHALL CHECK AND VERIFY ALL DIMENSIONS AND CONDITIONS ON THE JOB SITE.

REVISIONS:

TIDEWATER WAY
TNH-B-08C-2 MOD
614 PRINCE STREET, BEAUFORT, SOUTH CAROLINA

SET NOT FOR CONSTRUCTION

DRAWING SET:
CONSTRUCTION DOCUMENTS
REVIEW SET

DATE:
10.03.23

SHEET:
A-4

REVIEW

ROOF NOTES

Metal roof to be installed as per manufactuer's specifications.
Installation subcontractor shall be responsible for all roofing work.

Paint all roof mounted accessories to match roof color selected by owner or builder.

Roof vent terminals shall be 12' away from and 2' above any air intake, door or window, 18" away from any vertical wall extending above roof vent, and not below any roof eave, or as required by local codes.

GUTTERS AND DOWNSPOUTS

1.Gutters and downspouts are not shown for clarity. Owner or builder may elect to use rain diverters over doors and walkways in lieu of gutters. If gutters and downspouts are used, locate to allow drainage to flow away from house, adjacent structures and property line.

2. Gutters and downspouts, if used, shall be factory pre-primed .032 aluminum ready for finish painting. The back leg of all gutters shall extend 1" minimum above front rim. Gutters shall be hung with matching metal strips, which are attached under metal roofing. Penetrations of back of gutter or of eave flashing shall not be permitted. Downspouts shall be attached to wall with matching metal strips, which are attached to wall behind downspouts. Hold downspouts tight against walls.

3. Do not locate downspouts on front face of house. The designer suggests the use of traditional half round gutters and round downspouts should the owner or builder elect to install gutters and downspouts.

FLASHING AND DAMPROOFING NOTES

1. Install all exposed flashing with concealed cleats. Do not use surface fasteners of any type.

2. Base flashing shall be 2 ounce copper-fabric flashing equal to AFCO. Base flashing shall run up 6" minimum behind sheathing when installed at wood floor system.

3. Window and door head flashing shall be 2 ounce copper-fabric flashing, equal to AFCO either 16 ounce copper or .019 factory pre-primed aluminum break metal, or rubberized roll flashing at owner or builder's option.

4. Eave and rake flashing shall either be 16 ounce copper or .019 factory pre-primed aluminum break material at owner or builder's option. All roof edge flashing shall extend 6" minimum behind roofing felt or other roofing material. Verify that flashing runs not only under roofing material, but also under sub-roofing material such as roofing felt. Eave flashing at gutters shall extend to cover back leg of gutter, but shall terminate above rim of gutter.

5. Valley flashing shall be either 16 ounce copper or .019 factory pre-primed aluminum break metal at owner or builder's option 12" wide minimum centered in valleys. Lap joints 12" minimum.

6. Crawlspace vapor barrier shall be 6 mil polyethylene. Overlap joints a minimum of 6" and tape with duct tape. Tape vapor barrier to all foundation walls and piers.

7. Provide flashing as per details or as per SMACNA where roof pitch changes or where roofing intersects with vertical surfaces.

VENTILATION NOTES

1. All attics, crawlspaces and other concealed areas shall be ventilated as per local building codes.

2. Soffit vent shall be equal to one 2" diameter aluminum soffit vent per rafter void.

3. Crawlspace ventilation shall be as indicated in the Wall Sections with insect screen installed on the inside.

4. Provide insulation baffles at ventilated eaves as required to assure minimum 1" clear air space at bottom of roof deck.

ROOF VENTING NOTE:

THE DETAILS INCLUDED IN THIS SET ILLUSTRATE INSULATION EXTENDING UP RAFTERS TO ENCLOSE THE ENTIRE BUILDING SHELL & NON-VENTED ATTIC. IF THE ATTIC AREA IS NOT INSULATED, SOFFIT AND ATTIC VENTING WILL BE REQUIRED.

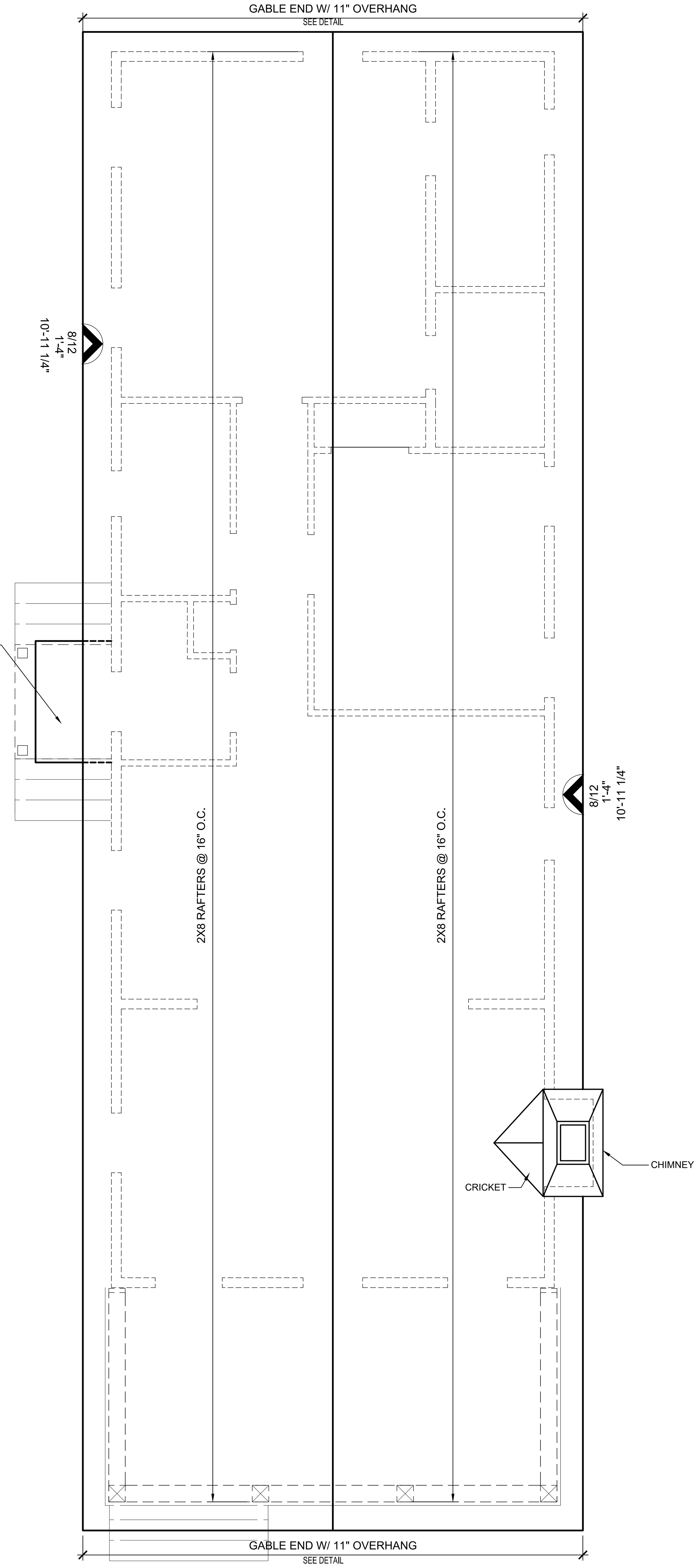

ADDITIONAL ROOF NOTES

1) TYPICAL ROOF PITCH: 2.5/12 & 10/12
2) TYPICAL OVERHANG: VARIES
3) PLATE HEIGHTS INDICATED ARE MEASURED FROM NEAREST FINISHED FLOOR.
4) ORIENT ALL MECHANICAL ROOF PENETRATIONS AWAY FROM STREET SIDE OF HOUSE WHERE PRACTICAL.
5) INSTALL FLASHING AND CRICKETS AT ALL ROOF PENETRATIONS AND ELEMENT PROJECTIONS.
6) ALONG 2" DIA. ALUM. SOFFIT VENTING INSTALL EITHER THERMOSTATICALLY CONTROLLED ATTIC VENTS OR CONT. RIDGE VENTS. VENTING IS NOT REQUIRED ATTIC IS SEALED AND INSULATED
7) INSTALL CERTAINTEED "WINTERGUARD" OR EQUAL UNDERLAYMENT BELOW ROOFING ON ALL ROOFS W/ SLOPES BETWEEN 2/12 AND 4/12
8) INSTALL METAL, OR ALUM. DRIP EDGES ON ALL TYPICAL EAVES.
9) BELOW IS THE DESCRIPTION OF THE ROOF INDICATORS ON EACH PLANE OF THE ROOF PLAN.
10) INSTALL "KICK OUT" FLASHING AT THE LOWER TERMINATION OF ALL ROOF / WALL INTERSECTIONS

INDICATES ROOF PITCH — 10/12
INDICATES DIRECTION OF ROOF SLOPE
INDICATES HORIZ. OVERHANG DIST. FROM PLYWOOD SHEATHING. SEE DETAIL @ WALL SECTIONS — 1'-4"
INDICATES RAFTER P.LATE HEIGHT ABOVE NEAREST HEATED FINISHED FLOOR — 8'-1"

SYMBOL INDICATES THERMOSTATICALLY CONTROLLED ATTIC VENT

1 / A-5 ROOF PLAN

1/4" = 1'-0"

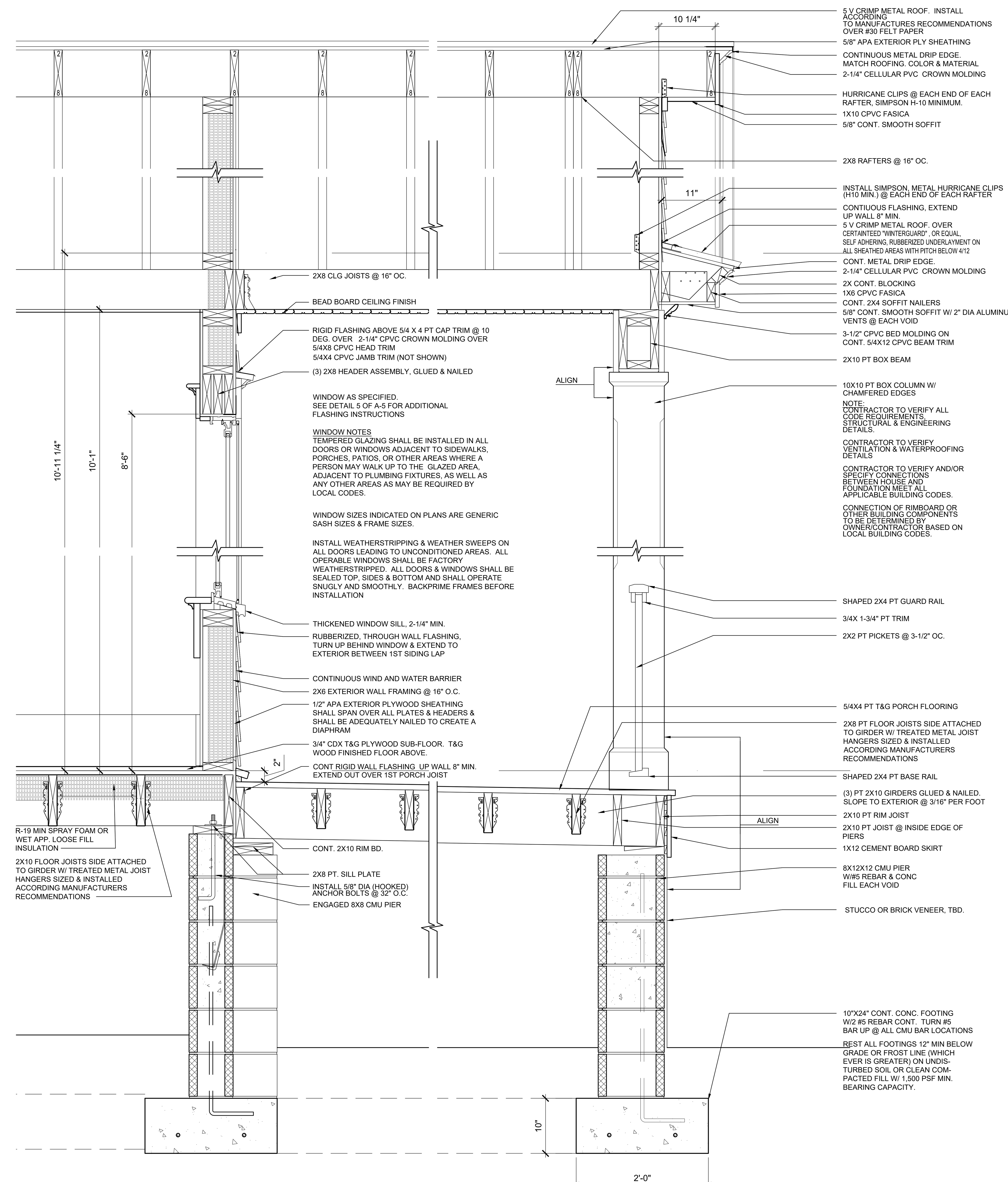

2 / A-5 FRONT PORCH DETAIL

1" = 1'-0"

0 1 2

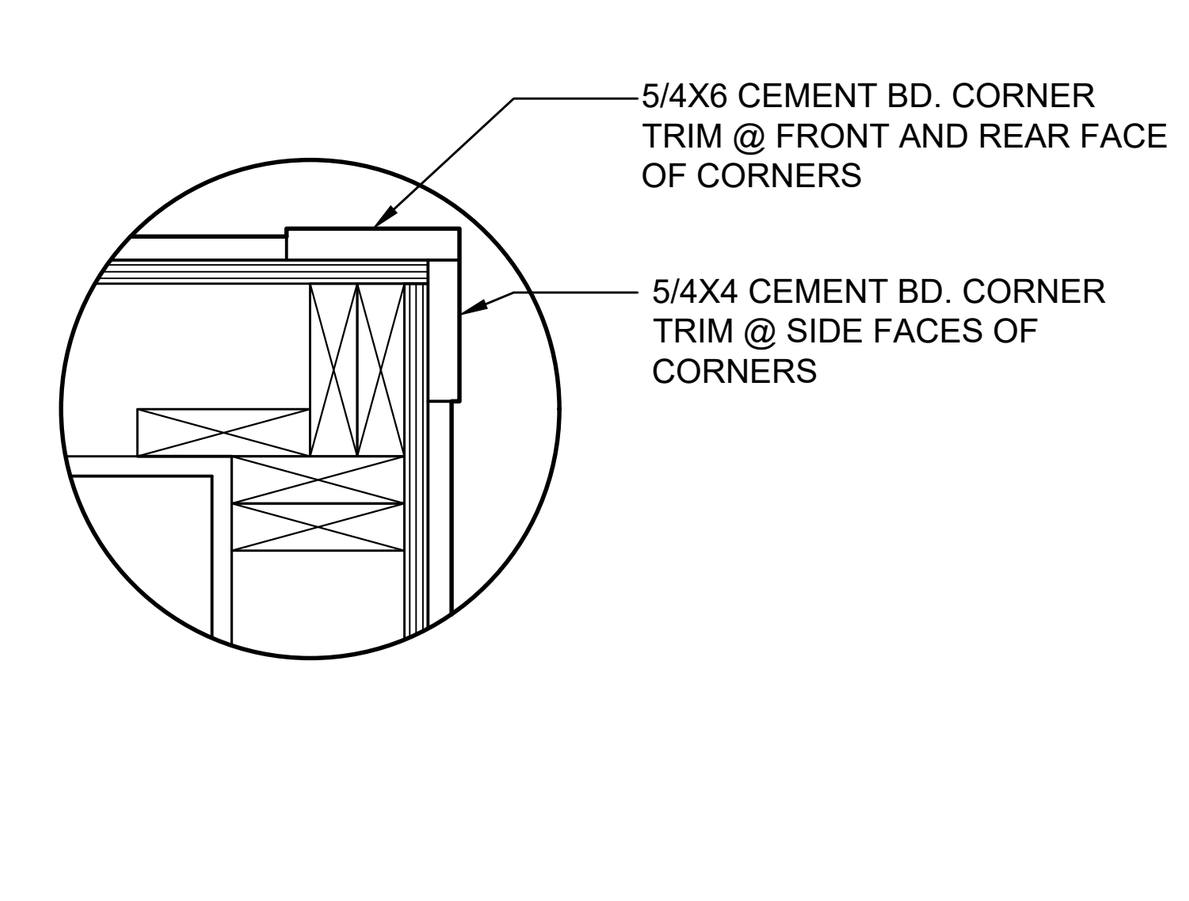

3 / A-5 EXT. CORNER TRIM DETAIL

NO SCALE

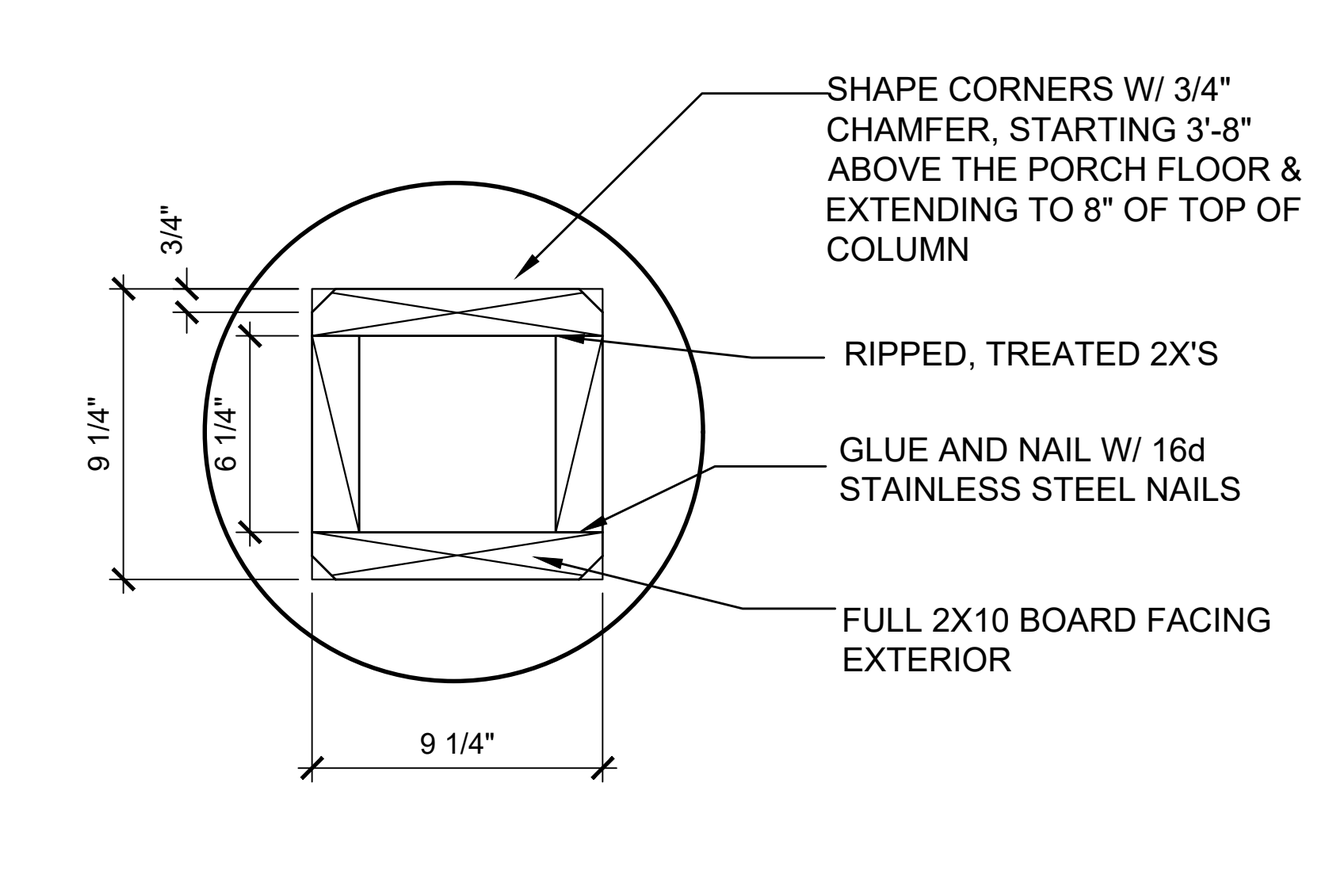

4 / A-5 PROCH COLUMN SECTION

NO SCALE

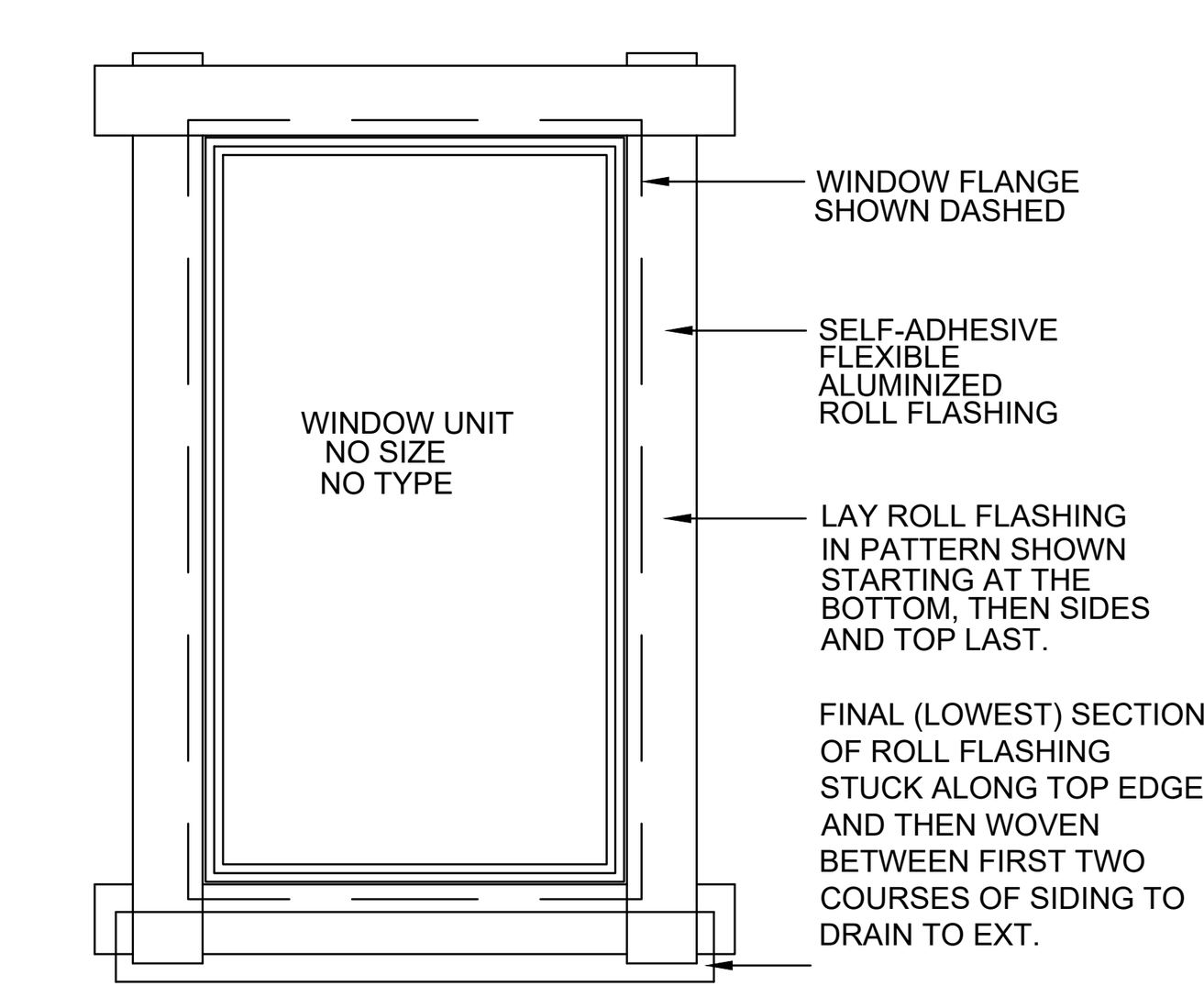

5 / A-5 TYPICAL WINDOW & DOOR FLASHING

NO SCALE

MDG
MOSER DESIGN GROUP
Residential Design
Urban Planning

1? MARKET #2
BEAUFORT • SOUTH CAROLINA
INFO@MOSERDESIGNGROUP.COM
(843) ???-?630

COPYRIGHT © 2023 MOSER DESIGN GROUP, INC. ALL RIGHTS RESERVED. THE DESIGNS, DRAWINGS, AND WRITTEN MATERIAL AND SPECIFICATIONS OF THIS DOCUMENT ARE THE PROPERTY OF MOSER DESIGN GROUP, INC. NO PART OF THESE DOCUMENTS SHALL BE COPIED, DISCLOSED TO OTHERS, OR REPRODUCED IN PART OR WHOLE IN ANY FORM WITHOUT THE WRITTEN CONSENT OF MOSER DESIGN GROUP, INC. DO NOT SCALE DRAWINGS, USE WRITTEN DIMENSIONS ONLY. IF A DIMENSION IS NOT GIVEN, VERIFY THE CORRECT DIMENSION WITH MOSER DESIGN GROUP INC. CONTRACTOR SHALL CHECK AND VERIFY ALL DIMENSIONS AND CONDITIONS ON THE JOB SITE.

REVISIONS:

TIDEWATER WAY
TNH-B-08 C-2 MOD
614 PRINCE STREET, BEAUFORT, SOUTH CAROLINA

REVIEW SET NOT FOR CONSTRUCTION

DRAWING SET:
CONSTRUCTION DOCUMENTS
REVIEW SET

DATE:
10.03.23

SHEET:
A-5

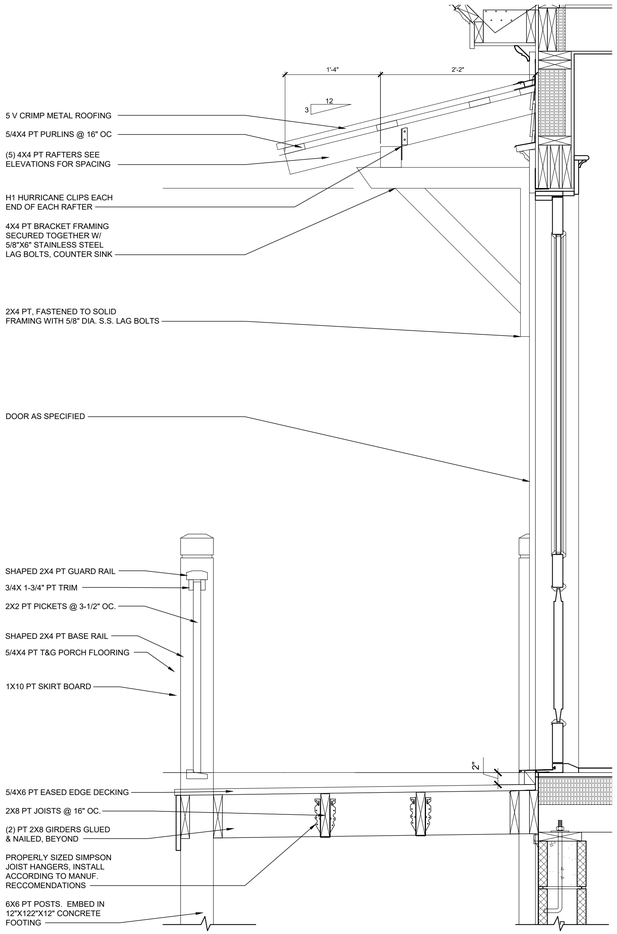

1 A-6 STOOP DETAIL

1" = 1'-0"

0 1 2

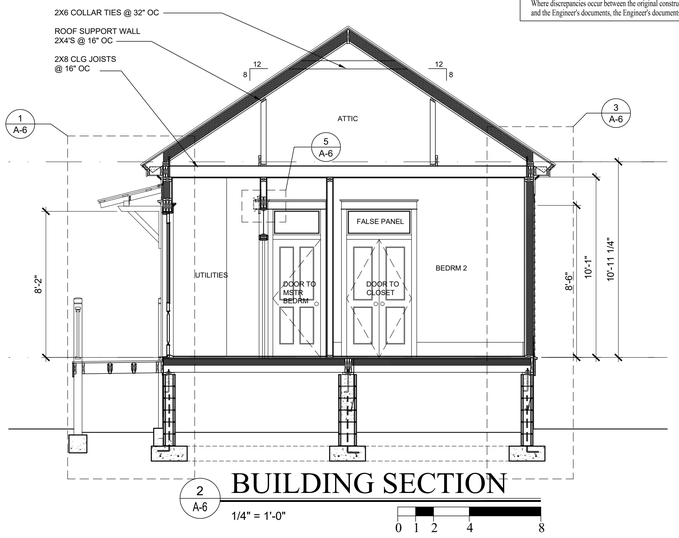

2 A-6 BUILDING SECTION

1/4" = 1'-0"

0 1 2 4 8

CONSTRUCTION NOTE:

Refer to Engineer's documents for new foundation and framing design along with details and notes for materials and methods of construction. Where discrepancies occur between the original construction documents and the Engineer's documents, the Engineer's documents shall govern.

NOTE:
INSTALL WET APPLIED, OR SPRAY FOAM INSULATION WITH THE FOLLOWING MINIMUMS:

ROOF RAFTERS	R-30
EXTERIOR WALLS	R-19
FLOOR	R-19

ROOF VENTING NOTE:

THE DETAILS INCLUDED IN THIS SET ILLUSTRATE INSULATION EXTENDING UP RAFTERS TO ENCLOSE THE ENTIRE BUILDING SHELL & NON-VENTED ATTIC. IF THE ATTIC AREA IS NOT INSULATED, SOFFIT AND ATTIC VENTING WILL BE REQUIRED.

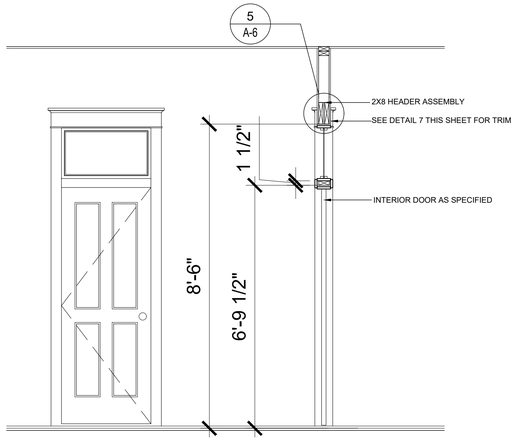

4 A-6 INTERIOR DOOR DETAIL

1/2" = 1'-0"

FINISH NOTES

1. Wallboard board shall be mold, mildew & moisture resistant, screw-attached 1/2" fire resistant gypsum board conforming to ASTM C36-64.

1. Ceiling board shall be mold, mildew & moisture resistant, screw-attached 5/8" fire resistant gypsum board conforming to ASTM C36-64.

2. Wallboard @ damp areas shall be equal to screw-attached 1/2" moisture resistant gypsum board @ all areas exposed to high humidity levels such as bathrooms.

3. Sheetrock accessories shall be equal to USG. All exposed corners and gypsum board edges shall have appropriate metal accessories. Sheetrock joint treatment materials shall conform to ASTM C476-64. Tape all joints and apply 3 coats of joint compound. Sand between coats and after the final finish coat.

4. All joints should be sound, clean, dry and free of contaminants. Caulking or sealant should be applied in accordance with spec data sheets and manufacturer's specific recommendations. Caulking and sealant shall me installed so that finish surface is smooth, even and regular.

5. Sealant shall be installed at exterior or damp interior joints between dissimilar materials as required. Prime all substrates with primer as recommended by manufacturer of sealant. Apply sealant from the bottom up.

BATH ACCESSORIES NOTES

Bath accessories are generally not shown anywhere on the plans, builder to allow blocking for bath accessories. Supply and install toilet paper holder 24" OC AFF and minimum 36" OC from wall behind toilet. Install 18" or 24" towel bars as possible in bathrooms.

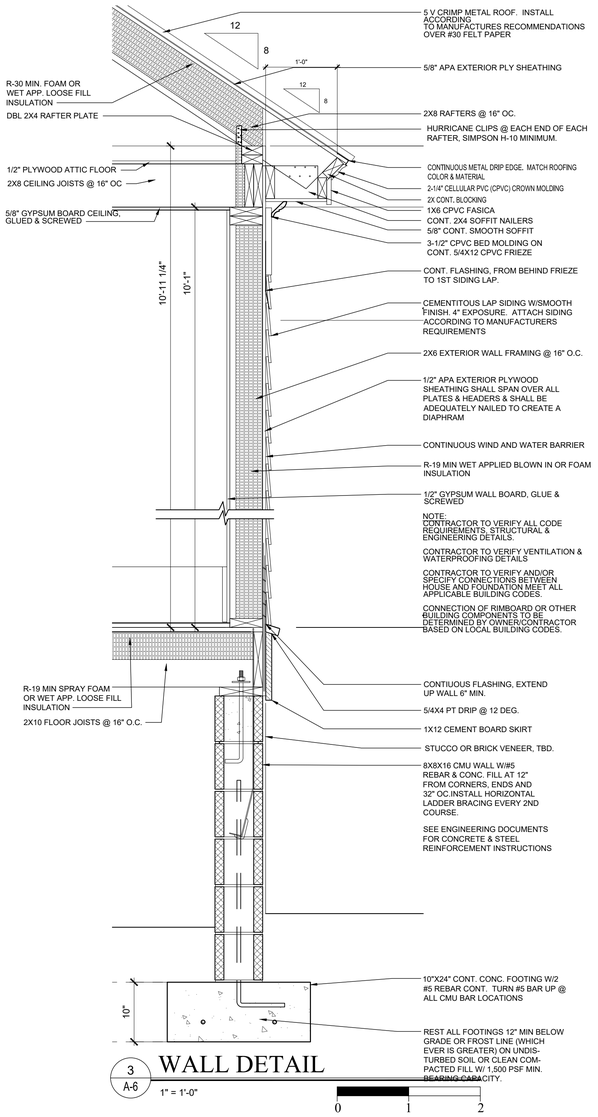

3 A-6 WALL DETAIL

1" = 1'-0"

0 1 2

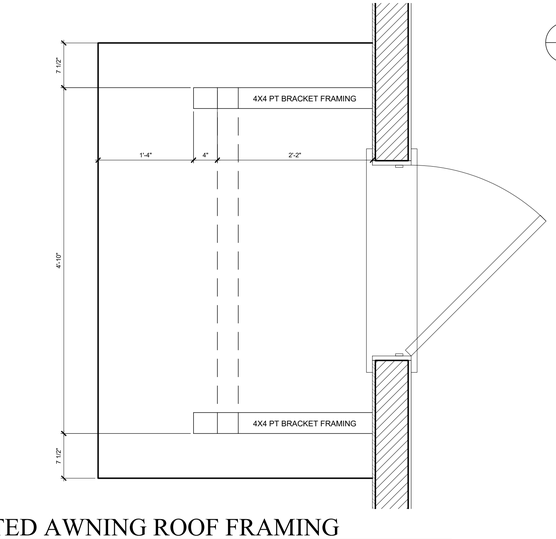

8 A-6 BRACKETED AWNING ROOF FRAMING

1" = 1'-0"

0 1 2

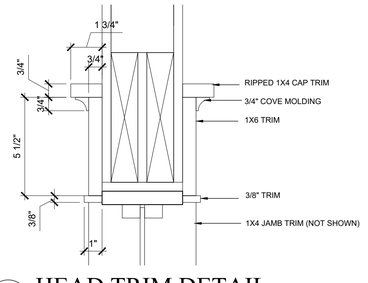

5 A-6 HEAD TRIM DETAIL

3" = 1'-0"

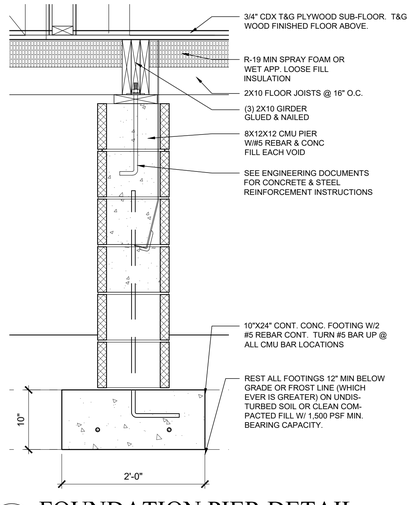

7 A-6 FOUNDATION PIER DETAIL

1" = 1'-0"

0 1 2

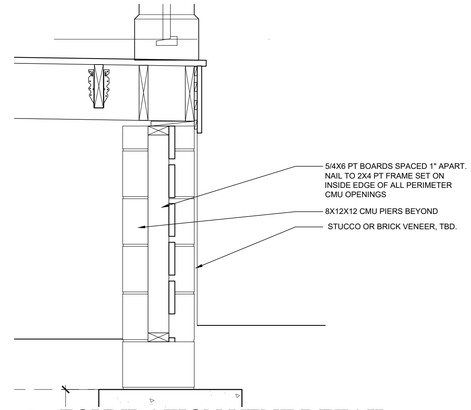

6 A-6 FOUNDATION VENT DETAIL

1" = 1'-0"

0 1 2

MDG
MOSER DESIGN GROUP
Residential Design
Urban Planning
1 MARKET #2
BEAUFORT • SOUTH CAROLINA
INFO@MOSERDESIGNGROUP.COM
(843) [illegible]-0030

COPYRIGHT © 2023 MOSER DESIGN GROUP, INC. ALL RIGHTS RESERVED. THE DESIGNS, DRAWINGS, AND WRITTEN MATERIAL AND SPECIFICATIONS OF THIS DOCUMENT ARE THE PROPERTY OF MOSER DESIGN GROUP, INC AND PART OF THESE DOCUMENTS SHALL BE COPIED, DISCLOSED TO OTHERS OR REPRODUCED IN PART OR WHOLE IN ANY FORM WITHOUT WRITTEN CONSENT OF MOSER DESIGN GROUP, INC. DO NOT SCALE DRAWINGS, USE WRITTEN DIMENSIONS ONLY. IF A DIMENSION IS NOT GIVEN, VERIFY THE CORRECT DIMENSION WITH MOSER DESIGN GROUP, INC. CONTRACTOR SHALL CHECK AND VERIFY ALL DIMENSIONS AND CONDITIONS ON THE JOB SITE.

REVISIONS:

SET FOR CONSTRUCTION REVIEW

TIDEWATER WAY
TMN-B-0808-2 MODEL
614 PRINCE STREET, BEAUFORT, SOUTH CAROLINA

DRAWING SET:
CONSTRUCTION DOCUMENTS
REVIEW SET

DATE:
10.03.23

SHEET:
A-6